Test Report

Verified code: 770468

Report No.: E202304201893-4

Customer:	Suzhou Performance Information Technology Co., Ltd.
Address:	2F, Building 4th No.99 Gangtian Road, Suzhou Industrial Park Jiangsu Province, P.R.China
Sample Name:	Multifunctional Clock Bluetooth Speaker Charger
Sample Model:	TEKHOME ONXYZ
Receive Sample Date:	Jun.07.2023
Test Date:	Jul.19.2023 ~ Jul.19.2023
Reference Document:	CFR47 FCC Part 1: Subpart I Section 1.1310 CFR47 FCC Part 1: Subpart I Section 1.1307
Test Result:	Pass

Prepared by: Wen Wenwen Reviewed by: Jiang Tao Approved by: Xiao Liang

GRG METROLOGY & TEST GROUP CO., LTD.

Issued Date: 2023-09-14

GRG METROLOGY & TEST GROUP CO., LTD.
Address: No.163,Pingyun Road, West of Huangpu Avenue, Guangzhou, Guangdong, China
Tel：（+86）400-602-0999 FAX：（+86）020-38698685 Web：http://www.grgtest.com

Statement

1. The report is invalid without "special seal for inspection and testing"; some copies are invalid; The report is invalid if it is altered or missing; The report is invalid without the signature of the person who prepared, reviewed and approved it.

2. The sample information is provided by the client and responsible for its authenticity; The content of the report is only valid for the samples sent this time.

3. When there are reports in both Chinese and English, the Chinese version will prevail when the language problems are inconsistent.

4. If there is any objection concerning the report, please inform us within 15 days from the date of receiving the report.

5. Without the agreement of the laboratory, the client is not authorized to use the test results for unapproved propaganda.

---------- The following blanks ----------

TABLE OF CONTENTS

1. GENERAL DESCRIPTION OF EUT 5
1.1 APPLICANT 5
1.2 MANUFACTURER 5
1.3 FACTORY 5
1.4 BASIC DESCRIPTION OF EQUIPMENT UNDER TEST 5
1.5 MODEL DIFFERENCE DESCRIPTIONS 6
2. LABORATORY AND MEASUREMENT UNCERTAINTY 8
2.1 LABORATORY 8
2.2 MEASUREMENT UNCERTAINTY 8
3. TEST MODE AND SUPPORTIVE INSTRUMENTS 9
3.1 TEST MODE 9
3.2 BLOCK DIAGRAM 9
3.3 LOCAL SUPPORTIVE INSTRUMENTS 9
4. LIST OF USED TEST EQUIPMENT AT GRGT 10
4.1 LIST OF USED TEST EQUIPMENT 10
5. TECHNICAL REQUIREMENTS SPECIFICATION 11
5.1 TEST LIMIT 11
5.2 TEST PROCEDURES 12
5.3 TEST RESULT 13
6. PHOTOGRAPHS OF TEST SET-UP 14
7. PHOTOGRAPHS OF THE EUT 14

---------- The following blanks ----------

REPORT ISSUED HISTORY

Report Version	Report No.	Description	Compile Date
1.0	E202304201893-4	Original Issue	2023-09-12

---------- The following blanks ----------

1. GENERAL DESCRIPTION OF EUT

1.1 APPLICANT

Name:	Suzhou Performance Information Technology Co., Ltd.
Address:	2F, Building 4th No.99 Gangtian Road, Suzhou Industrial Park Jiangsu Province, P.R.China

1.2 MANUFACTURER

Name:	Suzhou Performance Information Technology Co., Ltd.
Address:	2F, Building 4th No.99 Gangtian Road, Suzhou Industrial Park Jiangsu Province, P.R.China

1.3 FACTORY

Factory :	Suzhou Performance Information Technology Co., Ltd.
Address:	2F, Building 4th No.99 Gangtian Road, Suzhou Industrial Park Jiangsu Province, P.R.China

1.4 BASIC DESCRIPTION OF EQUIPMENT UNDER TEST

Product Name:	Multifunctional Clock Bluetooth Speaker Charger
Product Model:	TEKHOME ONXYZ
Adding Model:	TEKHOME ONXYZ Pro, TEKHOME ONXYZ Plus, TEKHOME ONXYZ1, TEKHOME ONXYZ1 Pro
Models Difference:	Please refer to section 1.5
Trade Name:	ONXYZ, TEKHOME, TEKISM, Tekism Dynamics, ∞|we, 异形
Power Supply:	Input: DC 20V 3.25A
Adapter 1:	Model: A869-200325C-CN1 Input: 100-240V~ 50/60Hz 1.7A Output: DC 5V 3A/9V 3A/12V 3A/15V 3A/20V 3.25A 3.3-21V 3.25A 65W Max
Adapter 2:	Model: PSD67-C Input: 100-240V~ 50/60Hz 1.6A Output: DC 5V 3A/9V 3A/12V 3A/15V 3A/20V 3.35A PPS: 3.3-21V 3.0A
Frequency Band:	117kHz-207kHz
FCC ID:	2BB6ATEKHOME

Antenna Type:	Coil Antenna
Modulation type:	FSK
Sample submitting way:	■Provided by customer □Sampling
Sample No:	E202304201893-0001
Temperature Range:	-10℃ ~ +35℃
Hardware version:	TEKHOME ONXYZ HW V0.5
Software version:	TEKHOM ONXYZ SF V1.0
Note 1:	According to model difference model TEKHOME ONXYZ is the test sample. All test results were performed on model TEKHOME ONXYZ.
Note 2:	The basic description of the EUT is provided by the applicant. This report is made solely on the basis of such data and/or information. We accept no responsibility for the authenticity and completeness of the above data and information and the validity of the results and/or conclusions.

1.5 MODEL DIFFERENCE DESCRIPTIONS

The applicant declared that this EUT (Multifunctional clock Bluetooth speaker charger) the main model no. TEKHOME ONXYZ and the family models no. TEKHOME ONXYZ1, TEKHOME ONXYZ Pro, TEKHOME ONXYZ Plus, TEKHOME ONXYZ1 Pro have the same technical construction including circuit diagram, PCB LAYOUT, hardware version and software version identical. the difference refer the below table.

Model No.	Trade mark
TEKHOME ONXYZ	TEKISM ∞|we TEKHOME ONXYZ 异形 Tekism Dynamics
TEKHOME ONXYZ1	
TEKHOME ONXYZ Pro	
TEKHOME ONXYZ Plus	
TEKHOME ONXYZ1 Pro	

---------- **The following blanks** ----------

Product Difference	Model name				
	TEKHOME ONXYZ	TEKHOME ONXYZ1	TEKHOME ONXYZ Pro	TEKHOME ONXYZ Plus	TEKHOME ONXYZ1 Pro
Wireless charging	√	√	√	√	√
radio	√	√	√	√	√
Bluetooth speaker	√	√	√	√	√
USB play music	√	√	×	×	√
Clock,date, alarm clock	√	√	√	√	√
USB-C1 charging port	√	√	√	√	√
USB-C2 charging port	√	√	√	√	√
USB-C3 charging port	×	×	√	×	√
USB-C4 charging port	×	×	√	√	×
USB-A1 charging port	√	√	×	√	×
USB-A2	√	√	×	×	√
WeChat applet	√	×	√	√	×
APP software	√	√	√	√	√
Other items (Key components, hardware, appearance, accessories)	√	√	√	√	√

Note:
1."√" indicates that this function is applicable to this model, and "×" indicates that this function is not applicable to this model.
2. The product has a total of 4 external charging ports. The position of A1 and C3 corresponds to the position of A2 and C4, and the internal circuit of the product is the same, only the interface shape is different.

---------- **The following blanks** ----------

2. LABORATORY AND MEASUREMENT UNCERTAINTY

2.1 LABORATORY

The tests & measurements refer to this report were performed by Shenzhen EMC Laboratory of GRG METROLOGY & TEST GROUP CO., LTD.

Add	:	Address: No.1301 Guanguang Road Xinlan Community, Guanlan Street, Longhua District Shenzhen, 518110, People's Republic of China
P.C.	:	518110
Tel	:	0755-61180008
Fax	:	0755-61180008

2.2 MEASUREMENT UNCERTAINTY

Parameter	Worst Case Uncertainty	Max. Uncertainty
E/H-Field Level Tester	12.6%	<30%

Note: This uncertainty represents an expanded uncertainty expressed at approximately the 95%.
This uncertainty represents an expanded uncertainty factor of *k*=2.

---------- The following blanks ----------

3. TEST MODE AND SUPPORTIVE INSTRUMENTS

3.1 TEST MODE

Mode No.	Description of the modes
Mode 1	EUT Standby Mode
Mode 2	EUT charging mode + RX load(5W)
Mode 3	EUT charging mode + RX load(7.5W)
Mode 4	EUT charging mode + RX load(10W)
Mode 5	EUT charging mode + RX load(15W)

3.2 BLOCK DIAGRAM

For mode 1

For mode 2 to mode 5

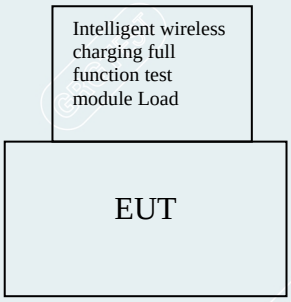

3.3 LOCAL SUPPORTIVE INSTRUMENTS

No.	Name of Equipment	Manufacturer	Model	Serial Number
A	Intelligent wireless charging full function test module Load	/	/	/

4. LIST OF USED TEST EQUIPMENT AT GRGT

4.1 LIST OF USED TEST EQUIPMENT

Name of equipment	Manufacturer	Model	Serial number	Calibration due
Long, medium and short wave electromagnetic field frequency selective analyzer	narda	EHP-200A	180ZX00611	2023-09-04

Note: The calibration interval of the test instruments is 12 months.

---------- The following blanks ----------

5. TECHNICAL REQUIREMENTS SPECIFICATION

5.1 TEST LIMIT

Frequency range (MHz)	Electric field strength (V/m)	Magnetic field strength (A/m)	Power density (mW/cm^2)	Averaging time (minutes)
(i) Limits for Occupational/Controlled Exposure				
0.3-3.0	614	1.63	*(100)	≤6
3.0-30	1842/f	4.89/f	*(900/f^2)	<6
30-300	61.4	0.163	1.0	<6
300-1,500			f/300	<6
1,500-100,000			5	<6
(ii) Limits for General Population/Uncontrolled Exposure				
0.3-1.34	614	1.63	*(100)	<30
1.34-30	824/f	2.19/f	*(180/f^2)	<30
30-300	27.5	0.073	0.2	<30
300-1,500			f/1500	<30
1,500-100,000			1.0	<30

f = frequency in MHz. * = Plane-wave equivalent power density.

The EUT does comply with requirements of KDB 680106 D01.
1)Power transfer frequency is less than 1MHz
Yes,the operating frequency of the device is 117kHz to 207kHz.
2)Output power from each primary coil is less than or equal to 15 watts.
Yes,the maximum output power of the primary coil is 15W.
3)The transfer system includes only single primary and secondary coils.This includes charging systems that may have multiple primary coils and clients that able to detect and allow coupling only between individual pair of coils.
Yes,the transfer system includes only single primary and secondary coils.
4)Client device is inserted in or placed directly in contact with the transmitter.
Yes,client device is placed directly in contact with the transmitter.
5)Mobile exposure conditions only (portable exposure conditions are not covered by this exclusion).
Yes,the EUT is a mobile Wireless Charger.
6)The aggregate H-field strengths at 15cm surrounding the device and 20cm above the top surface from all simultaneous transmitting coils are demonstrated to be less than 50% of the MPE limit.
Yes,the EUT field strength levels are 50% x MPE limit.

5.2 TEST PROCEDURES

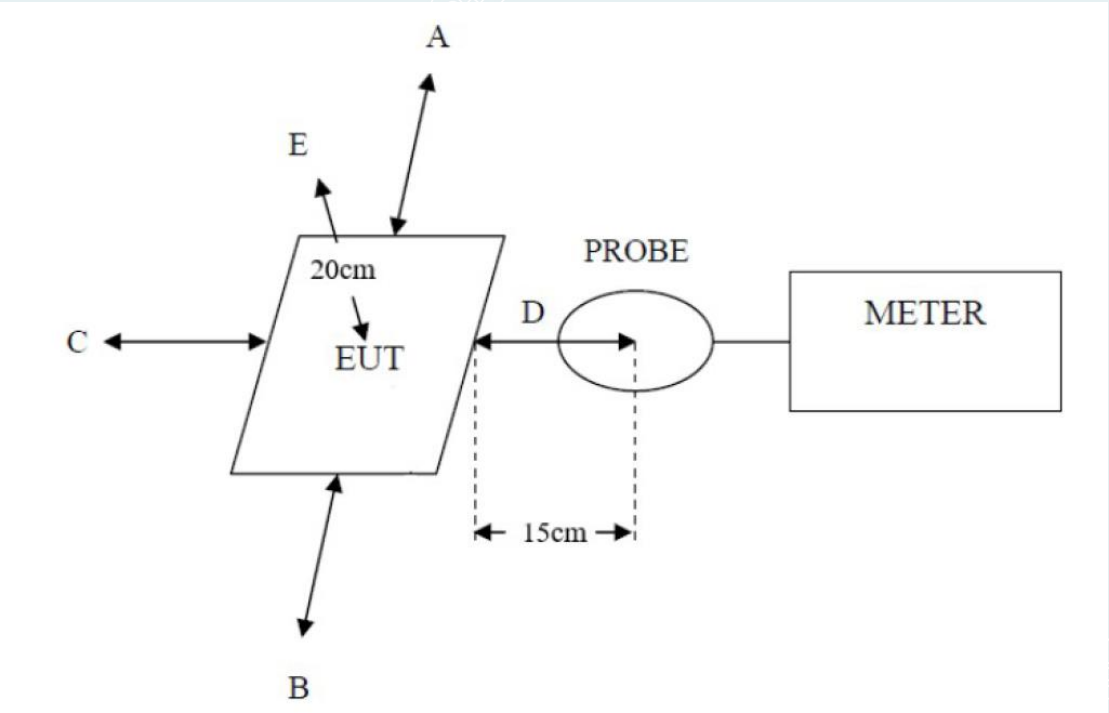

Note：Measurements should be made from all sides and the top of EUT,with the 15cm measured from the center of the probe(s) to the edge of the device and the 20cm measured from the center of the probe(s) to the top of the device. Position A is the front of the EUT, position B is the rear of the EUT, position C is the left of the EUT, position D is the right of the EUT, position E is the top of the EUT.

---------- The following blanks ----------

5.3 TEST RESULT

Date of testing:	2023-07-19
Ambient temperature:	24.8 ℃
Relative humidity:	55%RH
Ambient Pressure	101kPa
Test by:	Zhang Zishan

H-Field Strength at 15 cm from the edges surrounding the EUT and 20cm from the top surface of the EUT.

EUT Test Mode	Measured H-Field Strength Values(A/m)					50% Limit(A/m)	Limit (A/m)	Result
	Test Position A	Test Position B	Test Position C	Test Position D	Test Position E			
Mode 1	0.0473	0.0287	0.0170	0.0249	0.0181	0.815	1.63	Pass
Mode 2	0.0291	0.0627	0.0448	0.1325	0.0353	0.815	1.63	Pass
Mode 3	0.0380	0.1179	0.1616	0.0251	0.0541	0.815	1.63	Pass
Mode 4	0.0201	0.0932	0.0927	0.0223	0.0291	0.815	1.63	Pass
Mode 5	0.0893	0.0328	0.0272	0.1039	0.0433	0.815	1.63	Pass

E-Field Strength at 15 cm from the edges surrounding the EUT and 20cm from the top surface of the EUT.

EUT Test Mode	Measured E-Field Strength Values(V/m)					50% Limit(V/m)	Limit (V/m)	Result
	Test Position A	Test Position B	Test Position C	Test Position D	Test Position E			
Mode 1	0.1563	0.1203	0.1019	0.1035	0.0997	307	614	Pass
Mode 2	0.4863	0.6503	0.2183	0.6378	0.3432	307	614	Pass
Mode 3	0.5286	0.5737	0.4294	0.2282	0.4311	307	614	Pass
Mode 4	0.5592	0.6566	0.6932	0.2300	0.4138	307	614	Pass
Mode 5	0.7814	0.5144	0.3315	0.8702	0.6094	307	614	Pass

---------- The following blanks ----------

6. PHOTOGRAPHS OF TEST SET-UP

Please refer to the attached document E202304201893-7 test setup photo-FCC.

7. PHOTOGRAPHS OF THE EUT

Please refer to the attached document E202304201893-9 EUT photo-FCC.

---------- End of Report ----------