VT-DCAI-02

Specifications

Preface

The Specifications describe the product components and parameter meaning of VT-DCAI-02, and the contents involved like text, figures, and graphics belong to Velocitor Solutions No part of the Specifications may be extracted, reproduced, translated, or modified in any form or by any means without the prior written consent of Velocitor Solutions Unless otherwise specified, the Specifications are provided without representations or warranties of any kind.

About the Specifications:

The Specifications are intended to provide guidance for authorized users and technical support personnel of the product.

The product pictures and screen contents provided herein are for illustration only. The physical product (including but not limited to its appearance, color, and size) may differ from the displayed contents (including but not limited to the background, UIs, and pictures). Please refer to the physical product.

The figures contained herein are theoretical values obtained from the internal laboratory of Velocitor Solutions in a specific test environment (refer to the specific instructions). These figures may vary slightly in actual use due to the individual product differences, software version, service condition, and environmental factors.

With the real-time changes in product batches and production-supply factors, in order to provide product information, features, specifications, and parameters as accurate as possible, Vtrack may adjust and modify the text, pictures, and other contents in the Specifications from time to time to match with the actual performance, specification, indexes, components, and other information of the product. Such changes and necessary adjustments may be made without special notice.

Read the Specifications before using the product, to ensure that you will use the product correctly and all necessary functions will work properly.

Warning: conditions that may involve the safety of the device user or injure the device user

Important: conditions that may damage data integrity or firmware or hardware of the device

Note: additional descriptions, explanations of terms, etc.

Contents

1. PRODUCT INTRODUCTION **1**

2. FUNCTIONS AND FEATURES **1**

2.1 AI FUNCTION 2

2.1.1 ADAS FUNCTIONS *2*

2.1.2 DSC FUNCTIONS *2*

2.1.3 DMS FUNCTIONS (OPTIONAL) *3*

3. SPECIFICATIONS **3**

4. DIMENSIONAL DRAWINGS (UNIT: MM) **10**

5. SYSTEM CONNECTION DIAGRAM **10**

5.1 CONNECTION DIAGRAM OF ACC POWER SUPPLY SYSTEM 10

5.2 CONNECTION DIAGRAM OF OBD POWER SUPPLY SYSTEM 11

5.3 CABLE CONNECTOR PINOUTS 11

5.3.1 POWER SUPPLY BOX CONNECTOR PINOUT *12*

5.3.2 STANDARD POWER CABLE CONNECTOR PINOUT *12*

5.3.3 OBD POWER CABLE CONNECTOR PINOUT *13*

5.3.4 VIDEO OUTPUT CABLE CONNECTOR PINOUT *13*

6. NOTICE **14**

Abbreviations Explanation

Abbr.	Full Name
1920P	Resolution ratio 2560×1920
ADAS	Advanced Driving Assistance System
DSC	Driving Safety Cockpit
DMS	Driver Monitoring System
VBR	Variable Bit Rate
CBR	Constants Bit Rate
LDW	Lane Departure Warning
HMW	Headway Monitoring Warning
FCW	Forward Collision Warning

1. Product Introduction

VT-DCAI-02 is an AI dashcam that helps drivers to reduce traffic accidents and facilitates fleets to improve management efficiency. Based on AI technology, it can actively detect risky driving events and unsafe driving behaviors, supporting sending local real-time reminders to the driver to avoid risks and uploading events to the fleet management platform for driver training. It transmits real-time and accurate vehicle position information and operation data to the fleet management platform. It provides high-quality remote intercom and video live view playback to make the fleet management easier and more efficient.

2. Functions and Features

- Ultra-wide 140° DFOV road facing lens, supporting up to 1920P UHD video recording
- Ultra-wide 170° DFOV driver facing lens, supporting up to 1080P HD video recording
- Support up to 4-channel video recording
- H.264/H.265 encoding
- 2 x 256GB dual-Micro SD card storage, supporting the simultaneous storage of main streams and sub streams
- Built-in Wi-Fi, 4G communication module, and inertial navigation positioning module
- AES256 encryption for video/audio data, encryption protocol TLS1.3 for data transmission
- 4-channel IO input, 1-channel CAN and 1-channel RS232
- Compact design, not affecting the driver's sight regardless of vehicle size
- OBD power supply, easy installation
- Built-in ADAS function, supporting lane departure warning (LDW), forward collision warning (FCW), and headway monitoring warning (HMW)
- Built-in DSC function, supporting the detection of unsafe driving behaviors
- Support echo & noise canceling algorithm to improve the quality of two-way audio

All rights reserved.

communication

- Sleep mode, remote wakeup
- Built-in 6-axis gravity sensor, supporting rapid acceleration, rapid deceleration, harsh cornering, and accident detection

2.1 AI Function

VT-DCAI-02 uses machine vision based on video analysis technology to automatically identify road risks and drivers' unsafe driving behaviors. Any detected event will trigger audible and visual reminders to remind drivers in real time, and the event videos can also be uploaded to the cloud.

Warning: AI function must be calibrated and configured in strict accordance with the installation and operation instructions, otherwise, the AI function cannot work properly.

2.1.1 ADAS functions

LDW

HMW

FCW

2.1.2 DSC functions

Lens Covered

Yawning

Handheld Devices

Smoking

All rights reserved.

Distraction **No Driver** **Unfasten seat belt**

2.1.3 DMS functions (optional)

DMS

Driver prompter (R-Watch)

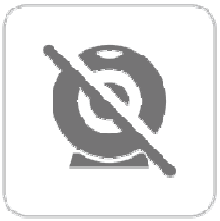

Lens Covered

Yawning

Handheld Devices

Smoking

Distraction

No driver

Unfastened seat belt

Fatigue driving

3. Specifications

Product model: VT-DCAI-02	
System	Embedded Linux
Language	Options: Chinese, English, Spanish (Latin American), Portuguese (Latin American), French, Russian and Japanese. Default: English. * The language includes interface language and voice reminder. TTS supports Chinese and English only.
Video/Audio	

All rights reserved.

Specifications

Video/Audio Recording	4-channel video (default: 2 channels; extension: 2 channels) + 1-channel audio
Max. Capability (with 2-channel AI)	1920P@25fps (ADAS)+1080P@25fps (DSC)+1080P@25fps (AHD) +800P@20fps (DMS) Recommended configuration (1920P@20fps+1080P@15fps+1080P@20fps (AHD) +800P@20fps (IPC))
Image Setup	Adjustable brightness, chroma, contrast, color saturation, and sharpness
Video Coding	Options: H.264 and H.265. Default: H.265
Audio Compression Standard	Options: ADPCM, G.711, and G.726. Default: ADPCM
CBR/VBR	Options: VBR and CBR. Default: VBR
Audio	Built-in MIC
Loudspeaker	Built-in speaker, power: 3W, with adjustable volume, not less than 70 dB at 1 m distance
Parameters of road facing lens	
Sensor Type	1/2.7" 5-megapixel CMOS sensor
Shutter Speed	1/30s~1/100000s
Lens	Focal length: 2.8 mm HFOV: 123°; VFOV: 65°; DFOV: 140°; Deviation: ±5°
Minimum Illuminance	Color: 0.05 Lux/F1.2
Lens Mount	built-in lens
Wide Dynamic Range (WDR)	Digital WDR
Backlight Compensation	Supported

All rights reserved.

Specifications

Signal-to-Noise Ratio (S/N)	≥48dB
Parameters of driver facing lens	
Sensor Type	1/2.9" 2-megapixel CMOS sensor
Shutter Speed	1/30s~1/100000s
Lens	Focal length: 2.2 mm HFOV: 151°; VFOV: 84°; DFOV: 170°; Deviation: ±5°
Lens Mount	Built-in lens
Wide Dynamic Range (WDR)	Digital WDR
Backlight Compensation	Supported
Signal-to-Noise Ratio (S/N)	≥45db
Infrared Lamp	Supported. The built-in environmental light sensor turns on/off the lamp automatically * Threshold: 4 lux from daytime to night, and 8 lux from night to daytime. There may be some deviations for different devices. Please refer to the actual measurements.
LED Indicator Status	
Power Status Lights	Off/Green Off: The device is not powered on Steady green: The device is powered normally
Alarm Indicator	Off/Red Off: The device does not generate any alarm Red flashes three times: The device generates an alarm
GPS Signal	Off/Red

All rights reserved.

Specifications

Indicator	Off: The device positioning runs normally Steady red: The device positioning runs abnormally (not positioned, or module not connected or damaged) Red flash (once per second): The device positioning is poor
Network Status Indicator	Off/Red Off: The device is connected to the server normally Steady red: The device is connected to the server abnormally Red flash (once per second): The device is in airplane mode * Airplane mode: Turning off the network signal of the dashcam to ensure safety when the vehicle enters the gas station.
Wi-Fi Status Indicator	Off/Red/Green Off: The device is in Disable or Client mode Steady green: The device is in AP mode Steady red: The device Wi-Fi runs abnormally
Recording Status Indicator	Off/Red Off: The built-in or extended camera runs normally Steady red: The built-in or extended camera stops (including privacy mode)/fails * When the video recording function is enabled (main stream and sub stream), the prompt will be given if no recording is detected. If the video recording function is disabled (main stream and sub stream), it will be regarded as normal recording status.
Storage	
Micro SD card	Micro SD card×2, (SDXC 32GB/64GB/128GB/256GB) Read/write rate: Class10 or above is recommended
Sensor	
Six-axis Sensor	Harsh acceleration, Harsh deceleration, Harsh cornering, and accident detection
Environmental	Supported, used as the cockpit camera, subject to day/night switching

All rights reserved.

Specifications

Light Sensor	
Port	
RS232	1-channel
I/O Port	4-channel input
CAN	1-channel (standard J1939 protocol) Warning: As some data fields may be customized by automobile manufacturers, the final measured data shall prevail. In the event that any required data is not supported, the integrated development is acceptable based on a specific protocol.
USB	1 × mini USB port
Button	1 To switch Wi-Fi to AP mode, press the button twice within 2s. * For details of other buttons, refer to the user manual of the product.
Network	
Wi-Fi	Support 2.4G (IEEE Std.802.11b/IEEE Std.802.11g/IEEE Std.802.11n)
4G	Plug-in SIM card (Nano SIM card)/ESIM ● For North America: LTE FDD: B2/B4/B5/B12/B13/B14/B66/B71 WCDMA: B2/B4/B5 ● For Europe and Asia: LTE FDD: B1/B3/B7/B8/B20/B28A WCDMA: B1/B8 GSM: B3/B8 ● For Latin America: LTE FDD: B1/B2/B3/B4/B5/B7/B8/B28 LTE TDD: B40 WCDMA: B1/B2/B5/B8

All rights reserved.

Specifications

	GSM: B2/B3/B5/B8 Warning: The industrial SIM card (MP2) is required, and the ordinary SIM card (MP1) is prohibited. We are not responsible for any problem caused by the use of any ordinary SIM card.
Positioning	
GNSS	Supported GPS L1 1575.42MHz GALILEO E1B/C1 GLONASS L1OF 1602MHz SBAS: WAAS, EGNOS, MSAS, GAGAN
Power Related	
Power supply	12V and 24V vehicles (self-adaptive)
Power consumption	● In standby mode：13.5V@5.67mA, 27V@3.39mA ● In sleep mode (4G and MCU powered)：13.5V@62~124mA, 27V@32~61mA ● Typical power consumption (with dual SD cards installed and SIM card for dialing): about 7.56W ● Full-load power consumption (with dual SD cards installed, SIM card for dialing, Wi-Fi turned on, IPC and AHD connected, and infrared lamp turned on): about 12.66W * The above data are test data obtained in a specific environment in the laboratory, and may vary with the individual product differences, service environment, and testing methods.
Environment	
Operating Temperature	-40°C ~ +70°C (-40°F ~ +158°F)
Storage	-40°C ~ +85°C (-40°F ~ +185°F)

All rights reserved.

Specifications

Temperature	
Operating Humidity	15~95% non-condensing
Storage Humidity	15~95% non-condensing
IP Rating	IP30 * The Dashcam is non-waterproof
Dimensions and Weight	
Dimensions L×W×H	Dashcam: 113.0 mm×67.8 mm×88.2 mm (excluding bracket); Deviation: ±2 mm Package: 176 mm×150 mm×114 mm; Deviation: ±3 mm
Weight	Net weight (device only): 295g Gross weight (including accessories and package): 745g Deviation: ±10g
* The actual dimensions and weight may vary with the individual product differences, manufacturing processes, and testing methods.	
Package Contents	
VT-DCAI-02 ×1, power supply box ×1, standard power cable ×1, Allen key ×1, mounting bracket ×1, bracket bolt ×1, crowbar ×1, desiccant ×1, and alcohol cotton×1	
* The configuration may vary in different regions.	

All rights reserved.

4. Dimensional Drawings (Unit: mm)

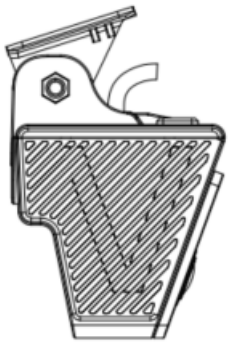

Left view

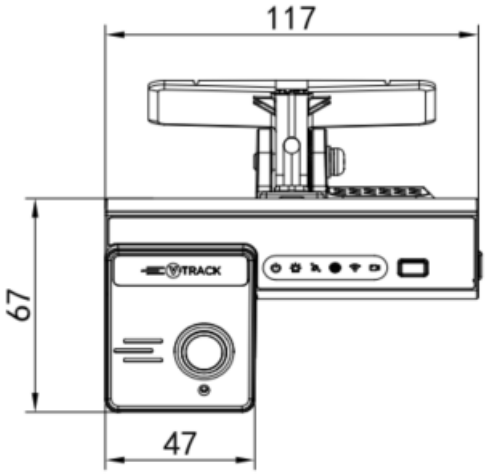

Front view

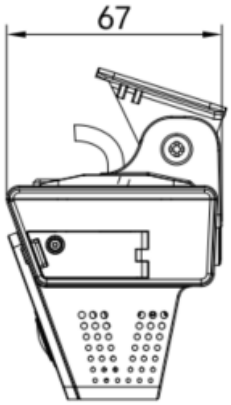

Right view

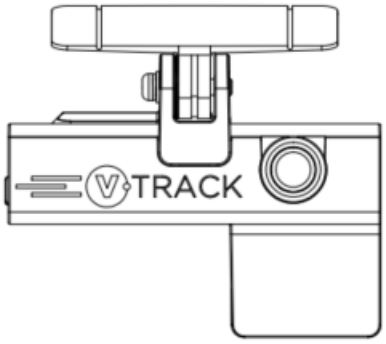

Rear view

5. System Connection Diagram

The standard packing list contains a standard power cable that supports ACC power supply and vehicle connection. You can select OBD power cable which support OBD power supply and vehicle connection.

5.1 Connection Diagram of ACC Power Supply System

All rights reserved.

Specifications

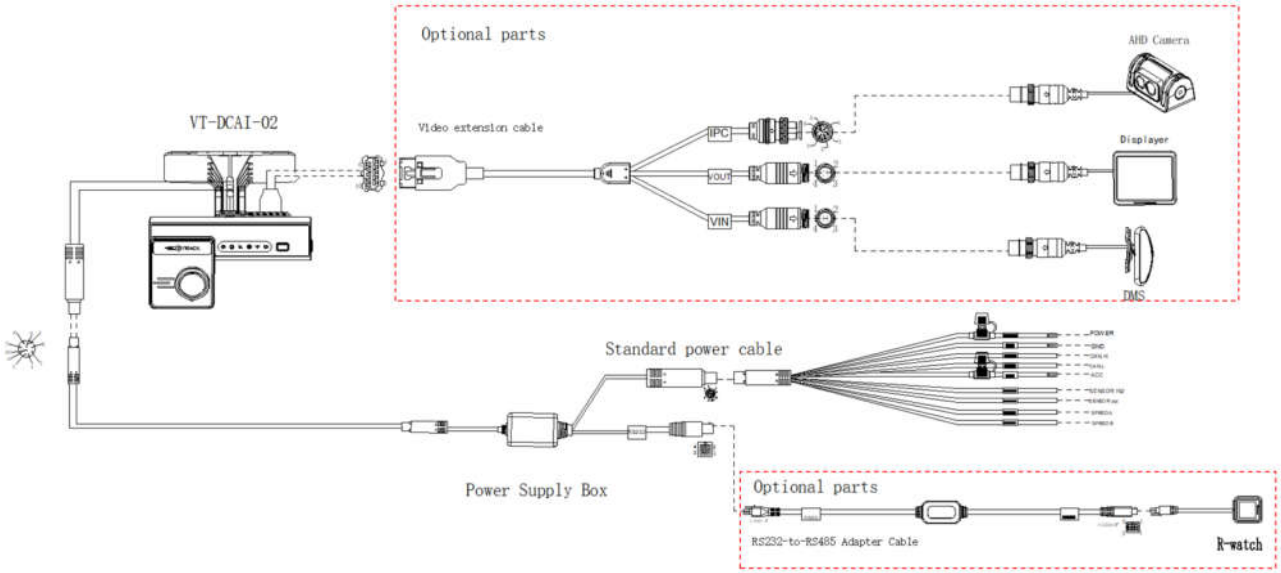

5.2 Connection Diagram of OBD Power Supply System

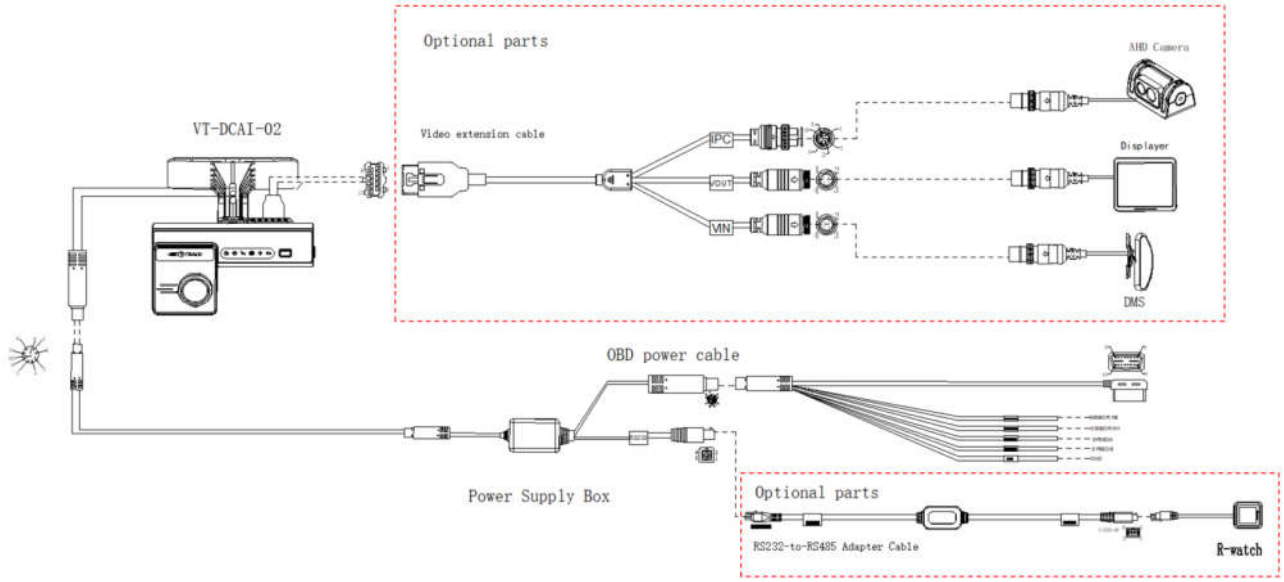

5.3 Cable Connector Pinouts

All rights reserved.

Specifications

5.3.1 Power Supply Box Connector Pinout

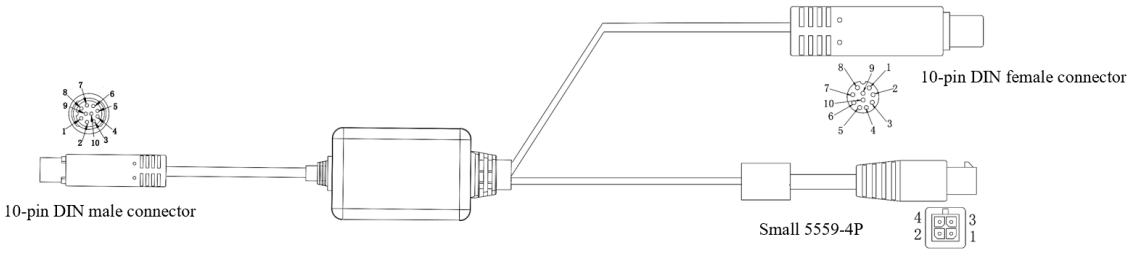

Pinout

TJC3-12PIN-P1.25		10-pin DIN male connector	
1+2	10	DC+	Red+Red-White
3+4	9	DC-	Black+Black-White
5	8	TX	White
6	7	RX	Brown
7	6	SIN1	Purple
8	5	SIN2	Blue
9	4	3.3V	Gray
10	3	CAN-H	Green
11	2	CAN-L	Yellow
12	1	ACC	Orange

Pinout

TJC3-12PIN-P1.25		10-pin DIN female connector	
1+2	10	GND	Black+Black-White
3+4	3	24V+	Red+Red-White
7	5	SIN1	Purple
8	7	SIN2	Brown
10	2	CAN-H	Green
11	1	CAN-L	Yellow
12	8	SIN3	Blue
13	9	SIN4	Gray
14	6	ACC	Orange
15	4	OBD-CHK	White

Pinout

TJC3-2PIN-P1.25		Small 5559-4P	
1	1	+12V	Pink
2	3	+5V	Blue-White
TJC3-15PIN-P1.25		**Small 5559-4P**	
9	7	GND	Black
6	2	232TX	Green
5	1	232RX	Yellow

5.3.2 Standard Power Cable Connector Pinout

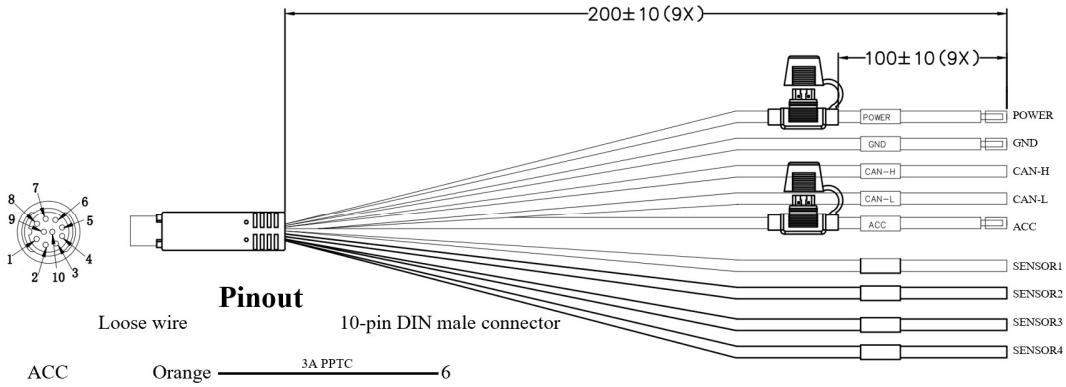

Pinout

	Loose wire			10-pin DIN male connector
semi-stripped	ACC	Orange	3A PPTC	6
	CAN-L	Yellow		1
	CAN-H	Green		2
	SENSOR IN3	Blue		8
	SENSOR IN2	Green-Yellow		7
	SENSOR IN1	Gray		5
	SENSOR IN4	Green-Black		9
semi-stripped	POWER	Red	3A PPTC	3
semi-stripped	GND	Black		10

All rights reserved.

Specifications

5.3.3 OBD Power Cable Connector Pinout

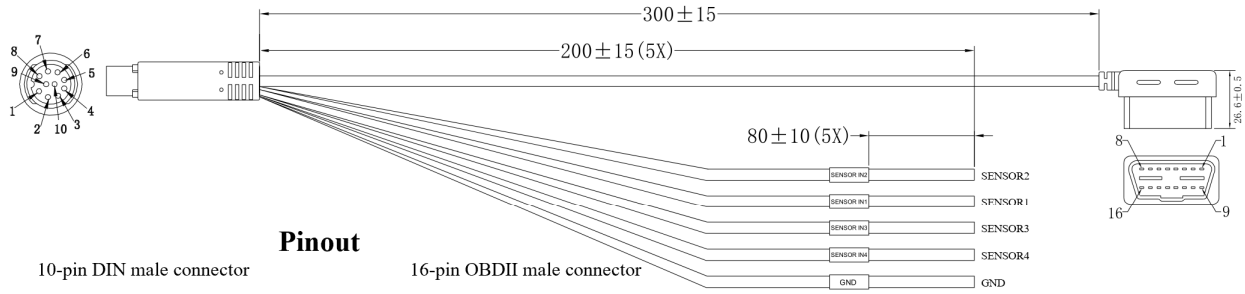

Pinout

10-pin DIN male connector — 16-pin OBDII male connector

GND	Black	10+4		4+5
CAN-H	Green	2		6
CAN-L	Yellow	1		14
POWER	Red	3	3A PPTC	16
SENSOR IN3	Green-Yellow	8		
SENSOR IN2	Blue	7		
SENSOR IN1	Gray	5		
SENSOR IN4	Green-Black	9		
GND	Black	10		

5.3.4 Video Output Cable Connector Pinout

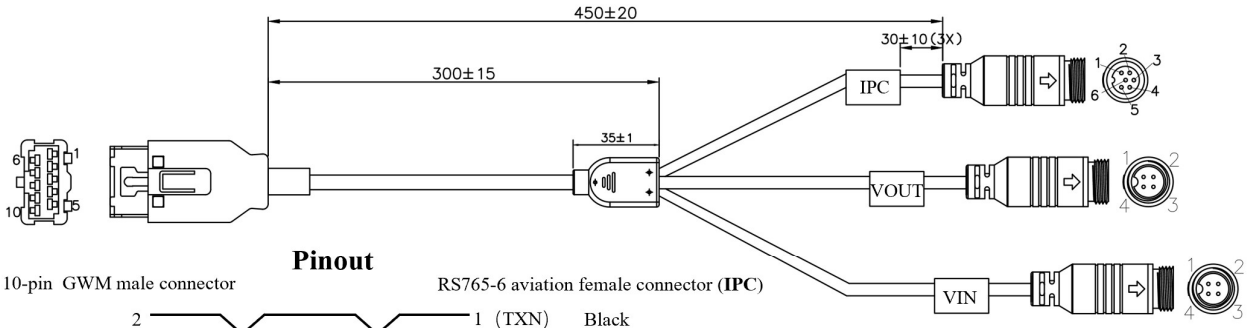

Pinout

10-pin GWM male connector — RS765-6 aviation female connector (**IPC**)

2	1 (TXN)	Black
7	2 (TXP)	White
1	4 (RXN)	Brown
6	5 (RXP)	Orange
10	3 (VCC)	Red
3	6 (GND)	Gray
shell	shell	(Ground)×3

10-pin GWM male connector — RS765-4 aviation male connector (**VOUT**)

4	4 (VOUT)	Yellow
5+9	2 (GND)	Shield

10-pin GWM male connector — RS765-4 aviation male connector (**VIN**)

8	4 (VOUT)	Green
3	2 (GND)	Shield
10	1 (+12V)	Purple

All rights reserved.

6. Notice

1) The product needs to be installed by professionals, otherwise, there may be a risk of electric shock, damage to vehicle lines, impact on AI experience and device falling-off.
2) The surface temperature may exceed 60°C when the product is in use under direct sunlight. Please do not touch the surface exposed to direct sunlight to avoid burns.

FCC Statement:

Any Changes or modifications not expressly approved by the party responsible for compliance could void the user's authority to operate the equipment.
This device complies with part 15 of the FCC Rules. Operation is subject to the following two conditions:
(1) This device may not cause harmful interference, and
(2) this device must accept any interference received, including interference that may cause undesired operation.
Note: This equipment has been tested and found to comply with the limits for a Class B digital device, pursuant to part 15 of the FCC Rules. These limits are designed to provide reasonable protection against harmful interference in a residential installation. This equipment generates uses and can radiate radio frequency energy and, if not installed and used in accordance with the instructions, may cause harmful interference to radio communications. However, there is no guarantee that interference will not occur in a particular installation. If this equipment does cause harmful interference to radio or television reception, which can be determined by turning the equipment off and on, the user is encouraged to try to correct the interference by one or more of the following measures:
-Reorient or relocate the receiving antenna.
-Increase the separation between the equipment and receiver.
-Connect the equipment into an outlet on a circuit different from that to which the receiver is connected.
-Consult the dealer or an experienced radio/TV technician for help.

This transmitter must not be co-located or operating in conjunction with any other antenna or transmitter. This equipment complies with FCC radiation exposure limits set forth for an uncontrolled environment. This equipment should be installed and operated with minimum distance 20cm between the radiator & your body

All rights reserved.