FCC SAR Test Report

Applicant:	UCLOUDLINK（SINGAPORE）PTE.LTD
EUT Description:	PetPhone
Model:	GLMT24A01
Brand:	GlocalMe
FCC ID:	2BB6E-GLMT24A01
Standards:	FCC 47CFR §2.1093
Date of Receipt:	2025/01/24
Date of Test:	2025/03/19 to 2025/03/27
Date of Issue:	2025/04/02

TOWE. tested the above equipment in accordance with the requirements set forth in the above standards. The test results show that the equipment tested is capable of demonstrating compliance with the requirements as documented in this report.

the results documented in this report apply only the tested sample, under the conditions and modes of operation as described herein. It is the manufacturer's responsibility assure that additional production units of the model are manufactured with identical electrical and mechanical components. All sample tested were in good operating condition throughout the entire test program. Measurement Uncertainties are published for informational purposes only and were not taken into account unless noted otherwise. without written approval of TOWE, the test report shall not be reproduced except in full.

Huang Kun
Approved By:

Li Wei
Reviewed By:

All rights reserved. Unless otherwise specified, no part of this report may be reproduced or utilized in any part, form or by any means, electronic or mechanical, including photocopying and microfilm, without permission in writing from TOWE.

Revision History

Rev.	Issue Date	Description	Revised by
01	2025/04/02	Original	Li Wei

All rights reserved. Unless otherwise specified, no part of this report may be reproduced or utilized in any part, form or by any means, electronic or mechanical, including photocopying and microfilm, without permission in writing from TOWE.

Table of Contents

1 Summary of Test Results 5
2 Guidance Applied 6
3 Lab Information 6
3.1 Testing Location 6
3.2 Test Facility / Accreditations 6
3.3 Ambient Condition 6
4 Client Information 6
4.1 Applicant 6
4.2 Manufacturer 6
4.3 Factory 6
5 Product Information 7
6 RF Exposure Limits 8
7 Introduction 9
7.1 SAR Definition 9
8 SAR Measurements System 10
8.1 The SAR Measurement Set-up 10
8.2 E-Field Probe 11
8.3 Data Acquisition Electronics (DAE) 11
8.4 Phantom 12
8.5 Device Holder 13
8.6 Measurement procedure 14
8.6.1 Power reference measurement 14
8.6.2 Area scan 14
8.6.3 Zoom Scan 15
8.6.4 Power Drift Measurement 15
9 Test Equipment list 16
10 SAR measurement variability 17
11 System Verification 18
11.1 Recipes for Tissue Simulate Liquid 18
11.2 Tissue Verification 18
11.3 SAR System Check 19
11.3.1 System Check Result 19
11.3.2 Detailed System Check Result 19
12 SAR General Measurement Procedures 20
12.1 SAR Measurement Conditions for LTE 20
12.1.1 Spectrum Plots for RB Configurations 20
12.1.2 MPR 20
12.1.3 A-MPR 20
12.1.4 Largest channel bandwidth standalone SAR test requirements 20
12.1.5 Other channel bandwidth standalone SAR test requirements 21
12.1.6 LTE TDD Considerations 21
13 Conducted Power 23
14 Stand-alone SAR test evaluation 60
15 SAR Data Summary 61
15.1 SAR Measurement Result of LTE Band 7 62
15.2 SAR Measurement Result of LTE Band 12 62
15.3 SAR Measurement Result of LTE Band 13 63
15.4 SAR Measurement Result of LTE Band 25 63
15.5 SAR Measurement Result of LTE Band 26 64
15.6 SAR Measurement Result of LTE Band 66 64
15.7 SAR Measurement Result of LTE Band 41 64

All rights reserved. Unless otherwise specified, no part of this report may be reproduced or utilized in any part, form or by any means, electronic or mechanical, including photocopying and microfilm, without permission in writing from TOWE.

16 Simultaneous Transmission Analysis **65**
16.1 Simultaneous Transmission SAR Summary 65
17 Measurement Uncertainty **66**
18 Calibration Certificate **66**
19 Test Setup Photos **66**
Appendix A: System Check Plots **66**
Appendix B: SAR Test Plots **66**
Appendix C: Calibration certificate **66**
Appendix D: Test Setup Photos **66**

All rights reserved. Unless otherwise specified, no part of this report may be reproduced or utilized in any part, form or by any means, electronic or mechanical, including photocopying and microfilm, without permission in writing from TOWE.

1 Summary of Test Results

Band	Highest SAR_{1g}(W/kg)
	Body 5mm
LTE Band 7	0.16
LTE Band 12/17	0.45
LTE Band 13	0.39
LTE Band 25/2	**1.19**
LTE Band 26/5	0.27
LTE Band 66/4	0.38
LTE Band 41/38	0.12
WIFI 2.4G	-
BT	-
Simultaneous Transmission SAR	1.57
SAR Limited(W/kg)	1.6

Remark:
This device supports LTE B2/B4/B5/B7/B12/B13/B17/B25/B26/B38/B41/B66. Since the supported frequency span for LTE B2/B4/B5/B17/B38 falls completely within the support's frequency span for LTE B25/B66/B26/B12/B41, both LTE bands have the same target power, and both LTE bands share the same transmission path, therefore SAR was only assessed for LTE B25/B66/B26/B12/B41.

All rights reserved. Unless otherwise specified, no part of this report may be reproduced or utilized in any part, form or by any means, electronic or mechanical, including photocopying and microfilm, without permission in writing from TOWE.

2 Guidance Applied

FCC 47CFR §2.1093
ANSI/IEEE C95.1-1992
IEC/IEEE 62209-1528:2020
FCC KDB 941225 D01 3G SAR Measurement Procedures v03r01
FCC KDB 941225 D05 SAR for LTE Devices v02r05
FCC KDB 447498 D01 General RF Exposure Guidance v06
FCC KDB 865664 D01 SAR Measurement 100 MHz to 6 GHz v01r04
FCC KDB 865664 D02 RF Exposure Reporting v01r02

3 Lab Information

3.1 Testing Location

These measurements tests were conducted at the Sushi TOWE Wireless Testing (Shenzhen) Co., Ltd. facility located at F401 and F101, Building E, Hongwei Industrial Zone, Liuxian 3rd Road, Bao'an District, Shenzhen, China. The measurement facility is compliant with the test site requirements specified in ANSI C63.4-2014
Tel.: +86-755-27212361
Contact Email: info@towewireless.com

3.2 Test Facility / Accreditations

A2LA (Certificate Number: 7088.01)
This laboratory is accredited in accordance with the recognized International Standard ISO/IEC 17025:2017 General requirements for the competence of testing and calibration laboratories. This accreditation demonstrates technical competence for a defined scope and the operation of a laboratory quality management system (refer to joint ISO-ILAC-IAF Communiqué dated April 2017).

FCC Designation No.: CN1353
Sushi TOWE Wireless Testing (Shenzhen) Co., Ltd. has been recognized as an accredited testing laboratory. Designation Number: CN1353.

ISED CAB identifier: CN0152
Sushi TOWE Wireless Testing (Shenzhen) Co., Ltd. has been recognized by ISED as an accredited testing laboratory.
CAB identifier: CN0152
Company Number: 31000

3.3 Ambient Condition

Temperature: 18°C~25°C
Relative Humidity: 30%~75%

4 Client Information

4.1 Applicant

Applicant:	UCLOUDLINK（SINGAPORE）PTE.LTD
Address:	80 ROBINSON ROAD #02-00 SINGAPORE(068898)

4.2 Manufacturer

Applicant:	UCLOUDLINK（SINGAPORE）PTE.LTD
Address:	80 ROBINSON ROAD #02-00 SINGAPORE(068898)

4.3 Factory

Factory:	Shenzhen uCloudlink Network Technology Co., Ltd.
Address:	3rd Floor, A part of Building 1, Shenzhen Software Industry Base, Nanshan District Xuefu Road, 518057 Shenzhen City, Guangdong, China

All rights reserved. Unless otherwise specified, no part of this report may be reproduced or utilized in any part, form or by any means, electronic or mechanical, including photocopying and microfilm, without permission in writing from TOWE.

5 Product Information

EUT Description	PetPhone	
Model	GLMT24A01	
Software Version	T20_TSV1.0.000.002	
Hardware Version	T20_BD_VB	
IMEI	357950340001283 357950340001358	
Device Capabilities:		
Band	Frequency Range (MHz)	Modulation Type
LTE Band 2	1850 ~1910	QPSK 16QAM
LTE Band 4	1710~1755	
LTE Band 5	824~849	
LTE Band 7	2500~2570	
LTE Band 12	699~716	
LTE Band 13	777 ~ 787	
LTE Band 17	704~716	
LTE Band 25	1850 ~ 1915	
LTE Band 26	814~849	
LTE Band 38	2570~2620	
LTE Band 41	2496~2690	
LTE Band 66	1710 ~ 1780	
Bluetooth	2402~2480	GFSK
Wi-Fi 2.4G	2400~2483.5	802.11b/g/n
Antenna Type	☐ External, ☒ Integrated	
Remark: The above EUT's information was declared by applicant, please refer to the specifications or user manual for more detailed description.		

All rights reserved. Unless otherwise specified, no part of this report may be reproduced or utilized in any part, form or by any means, electronic or mechanical, including photocopying and microfilm, without permission in writing from TOWE.

6 RF Exposure Limits

Human Exposure	Uncontrolled Environment General Population (W/kg) or (mW/g)	Controlled Environment Occupational (W/kg) or (mW/g)
Spatial Peak SAR[1] (Brain/Trunk)	1.6	8.0
Spatial Average SAR[2] (Whole Body)	0.08	0.4
Spatial Peak SAR[3] (Hands/Feet/Ankle/Wrist)	4.0	20.0

Note:

1, The Spatial Peak value of the SAR averaged over any 1 gram of tissue (defined as a tissue volume in the shape of a cube) and over the appropriate averaging time.

2, The Spatial Average value of the SAR averaged over the whole body.

3, The Spatial Peak value of the SAR averaged over any 10 grams of tissue (defined as a tissue volume in the shape of a cube) and over the appropriate averaging time.

Uncontrolled Environments are defined as locations where there is the exposure of individuals who have no knowledge or control of their exposure. The general population/uncontrolled exposure limits are applicable to situations in which the general public may be exposed or in which persons who are exposed as a consequence of their employment may not be made fully aware of the potential for exposure or cannot exercise control over their exposure. Members of the general public would come under this category when exposure is not employment-related; for example, in the case of a wireless transmitter that exposes persons in its vicinity.

Controlled Environments are defined as locations where there is exposure that may be incurred by persons who are aware of the potential for exposure, (i.e. as a result of employment or occupation). In general, occupational/controlled exposure limits are applicable to situations in which persons are exposed as a consequence of their employment, who have been made fully aware of the potential for exposure and can exercise control over their exposure. The exposure category is also applicable when the exposure is of a transient nature due to incidental passage through a location where the exposure levels may be higher than the general population/uncontrolled limits, but the exposed person is fully aware of the potential for exposure and can exercise control over his or her exposure by leaving the area or by some other appropriate means.

All rights reserved. Unless otherwise specified, no part of this report may be reproduced or utilized in any part, form or by any means, electronic or mechanical, including photocopying and microfilm, without permission in writing from TOWE.

7 Introduction

SAR is related to the rate at which energy is absorbed per unit mass in an object exposed to a radio field. The SAR distribution in a biological body is complicated and is usually carried out by experimental techniques or numerical modeling. The standard recommends limits for two tiers of groups, occupational/controlled and general population/uncontrolled, based on a person's awareness and ability to exercise control over his or her exposure. In general, occupational/controlled exposure limits are higher than the limits for general population/uncontrolled.

7.1 SAR Definition

The SAR definition is the time derivative (rate) of the incremental energy (dW) absorbed by (dissipated in) an incremental mass (dm) contained in a volume element (dv) of a given density (ρ). The equation description is as below:

$$\boldsymbol{SAR = \frac{d}{dt}\left(\frac{dW}{dm}\right) = \frac{d}{dt}\left(\frac{dW}{\rho dv}\right)}$$

SAR is expressed in units of Watts per kilogram (W/kg):

$$\mathbf{SAR} = \frac{\boldsymbol{\sigma E^2}}{\boldsymbol{\rho}}$$

Where:

σ is the conductivity of the tissue material (S/m)

ρ is the mass density of the tissue material (kg/m^3)

E is the RMS electrical field strength (V/m)

All rights reserved. Unless otherwise specified, no part of this report may be reproduced or utilized in any part, form or by any means, electronic or mechanical, including photocopying and microfilm, without permission in writing from TOWE.

8 SAR Measurements System

8.1 The SAR Measurement Set-up

The DASY system used for performing compliance tests consists of the following items:

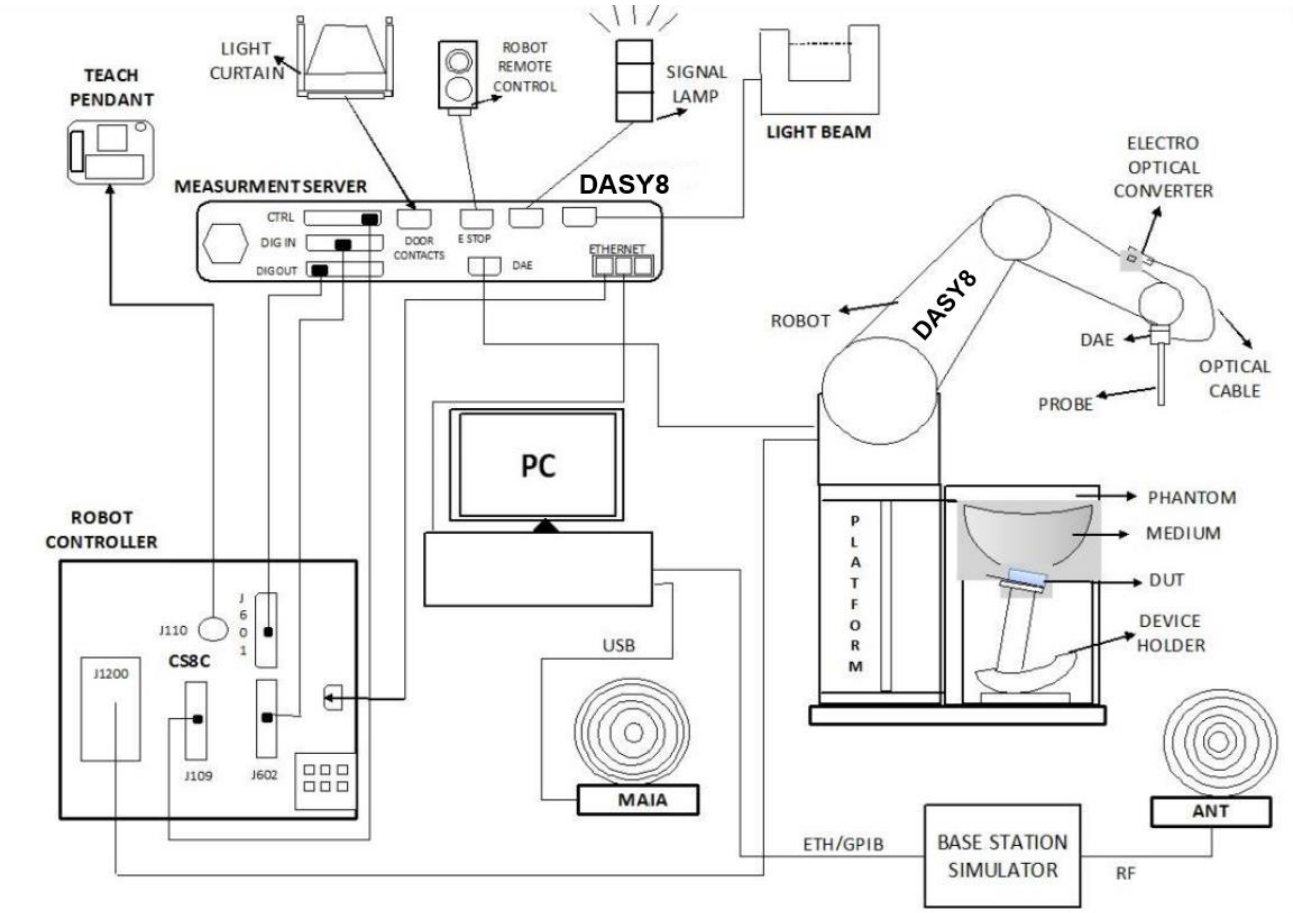

- A standard high precision 6-axis robot with controller, teach pendant and software. An arm extension for accommodating the data acquisition electronics (DAE).
- An isotropic Field probe optimized and calibrated for the targeted measurement.
- A data acquisition electronics (DAE) which performs the signal amplification, signal multiplexing, AD-conversion, offset measurements, mechanical surface detection, collision detection, etc. The unit is battery powered with standard or rechargeable batteries. The signal is optically transmitted to the EOC.
- The Electro-optical converter (EOC) performs the conversion from optical to electrical signals for the digital communication to the DAE. To use optical surface detection, a special version of the EOC is required. The EOC signal is transmitted to the measurement server.
- The function of the measurement server is to perform the time critical tasks such as signal filtering, control of the robot operation and fast movement interrupts.
- The Light Beam used is for probe alignment. This improves the (absolute) accuracy of the probe positioning.
- A computer running Windows 11 and the DASY8 software.
- Remote control and teach pendant as well as additional circuitry for robot safety such as warning lamps, etc.
- The phantom, the device holder and other accessories according to the targeted measurement.

All rights reserved. Unless otherwise specified, no part of this report may be reproduced or utilized in any part, form or by any means, electronic or mechanical, including photocopying and microfilm, without permission in writing from TOWE.

8.2 E-Field Probe

	Symmetrical design with triangular core Built-in shielding against static charges PEEK enclosure material (resistant to organic solvents, e.g., DGBE)
Calibration	ISO/IEC 17025 calibration service available.
Frequency	10 MHz to > 6 GHz Linearity: ± 0.2 dB (30 MHz to 6 GHz)
Directivity	± 0.3 dB in TSL (rotation around probe axis) ± 0.5 dB in TSL (rotation normal to probe axis)
Dynamic Range	10 µW/g to > 100 mW/g Linearity: ± 0.2 dB (noise: typically < 1 µW/g)
Dimensions	Overall length: 337 mm (Tip: 20 mm) Tip diameter: 2.5 mm (Body: 12 mm) Typical distance from probe tip to dipole centers: 1 mm

8.3 Data Acquisition Electronics (DAE)

	The data acquisition electronics (DAE) consists of a highly sensitive electrometer-grade preamplifier with auto-zeroing, a channel and gain switching multiplexer, a fast 16 bit AD-converter and a command decoder and control logic unit. Transmission to the measurement server is accomplished through an optical downlink for data and status information as well as an optical uplink for commands and the clock. The input impedance of the DAE is 200 MOhm; the inputs are symmetrical and floating. Common mode rejection is above 80 dB.

All rights reserved. Unless otherwise specified, no part of this report may be reproduced or utilized in any part, form or by any means, electronic or mechanical, including photocopying and microfilm, without permission in writing from TOWE.

8.4 Phantom

SAM Twin Phantom:

Material	Vinylester, glass fiber reinforced (VE-GF)	
Shell Thickness	2 ± 0.2 mm (6 ± 0.2 mm at ear point)	
Dimensions (incl. Wooden Support)	Length: 1000 mm Width: 500 mm Height: adjustable feet	
Filling Volume	Approx. 25 liters	
Wooden Support	SPEAG standard phantom table	

The bottom plate contains three pair of bolts for locking the device holder. The device holder positions are adjusted to the standard measurement positions in the three sections. A white cover is provided to tap the phantom during off-periods to prevent water evaporation and changes in the liquid parameters. On the phantom top, three reference markers are provided to identify the phantom position with respect to the robot.

ELI Phantom:

Material	Vinylester, glass fiber reinforced (VE-GF)	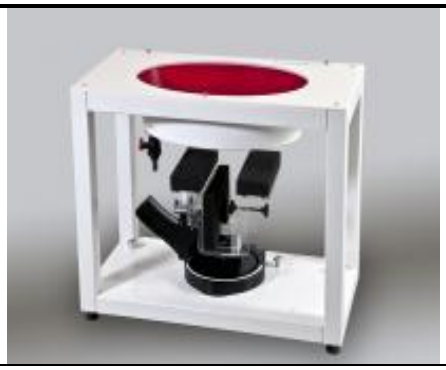
Shell Thickness	2.0 ± 0.2 mm (bottom plate)	
Dimensions	Major axis: 600 mm Minor axis: 400 mm	
Filling Volume	approx. 30 liters	
Wooden Support	SPEAG standard phantom table	

The ELI phantom is intended for compliance testing of handheld and body-mounted wireless devices in the frequency range of 30 MHz to 6 GHz. ELI4 is fully compatible with standard and all known tissue simulating liquids.

All rights reserved. Unless otherwise specified, no part of this report may be reproduced or utilized in any part, form or by any means, electronic or mechanical, including photocopying and microfilm, without permission in writing from TOWE.

8.5 Device Holder

The SAR measured in the phantom is approximately inversely proportional to the square of the distance between the source and the liquid surface. For a source at 5mm distance, a positioning uncertainty of ± 0.5mm would produce uncertainty in the SAR of ±20%. Accurate device positioning is therefore crucial for accurate and repeatable measurements. The positions at which the devices must be measured are defined by the standards. The DASY8 device holder along with the associated adaptors / options is designed to accommodate different types & sizes (laptops, tablets, phones) of test devices and yet provide accurate and repeatable positioning as described in the test standards.

The device holder is available in two configurations (see Figure 3.13.1): for hand held transmitters (mobile phones) – MD4HHTV5 – Mounting Device for Hand-Held Transmitters and for Body-Worn transmitters – MD4LAP5 – Mounting Device for laptops and other body worn transmitters.

(a) MD4HHTV5

(b) MD4LAPV5

Figure 3.13.1: Mounting Device for Hand-Held Devices and Laptop / Body-Worn Devices

All rights reserved. Unless otherwise specified, no part of this report may be reproduced or utilized in any part, form or by any means, electronic or mechanical, including photocopying and microfilm, without permission in writing from TOWE.

8.6 Measurement procedure

8.6.1 Power reference measurement

The Power Reference Measurement and Power Drift Measurement jobs are useful jobs for monitoring the power drift of the device under test in the batch process. The minimum distance of probe sensors to surface determines the closest measurement point to phantom surface. This distance cannot be smaller than the distance of sensor calibration points to probe tip as defined in the probe properties.

8.6.2 Area scan

Measurement procedures for evaluating SAR from wireless handsets typically start with a coarse measurement grid to determine the approximate location of the local peak SAR values. This is known as the area-scan procedure. In addition, identify the positions of any local maxima with SAR values within 2 dB of the maximum value, and that will not be within the zoom scan of other peaks. Additional zoom scans shall be measured for such peaks only when the primary peak is within 2 dB of the SAR compliance limit.

Area scan parameters extracted from IEC/IEEE 62209-1528 SAR measurement as below:

Parameter	DUT transmit frequency being tested	
	$f \leq 3$ GHz	3 GHz < $f \leq 10$ GHz
Maximum distance between the measured points (geometric centre of the sensors) and the inner phantom surface (z_{M1} in Figure 20 in mm)	5 ± 1	δ ln(2)/2 ± 0,5 [a]
Maximum spacing between adjacent measured points in mm (see O.8.3.1)[b]	20, or half of the corresponding zoom scan length, whichever is smaller	60/f, or half of the corresponding zoom scan length, whichever is smaller
Maximum angle between the probe axis and the phantom surface normal (α in Figure 20)[c]	5° (flat phantom only) 30° (other phantoms)	5° (flat phantom only) 20° (other phantoms)
Tolerance in the probe angle	1°	1°

[a] δ is the penetration depth for a plane-wave incident normally on a planar half-space.

[b] See Clause O.8 on how Δx and Δy may be selected for individual area scan requirements.

[c] The probe angle relative to the phantom surface normal is restricted due to the degradation in the measurement accuracy in fields with steep spatial gradients. The measurement accuracy decreases with increasing probe angle and increasing frequency. This is the reason for the tighter probe angle restriction at frequencies above 3 GHz.

All rights reserved. Unless otherwise specified, no part of this report may be reproduced or utilized in any part, form or by any means, electronic or mechanical, including photocopying and microfilm, without permission in writing from TOWE.

8.6.3 Zoom Scan

Zoom Scans are used to assess the peak spatial SAR values within a cubic averaging volume containing 1 g and 10 g of simulated tissue. The Zoom Scan measures points (refer to table below) within a cube whose base faces are centered on the maxima found in a preceding area scan job within the same procedure. When the measurement is done, the Zoom Scan evaluates the averaged SAR for 1 g and 10 g and displays these values next to the job's label.

Zoom Scan parameters extracted from IEC/IEEE 62209-1528 SAR measurement as below:

Parameter	DUT transmit frequency being tested	
	$f \leq 3$ GHz	3 GHz $< f \leq 10$ GHz
Maximum distance between the closest measured points and the phantom surface (z_{M1} in Figure 20 and Table 3, in mm)	5	$\delta \ln(2)/2$ [a]
Maximum angle between the probe axis and the phantom surface normal (α in Figure 20)	5° (flat phantom only) 30° (other phantoms)	5° (flat phantom only) 20° (other phantoms)
Maximum spacing between measured points in the x- and y-directions (Δx and Δy, in mm)	8	$24/f$ [b]
For uniform grids: Maximum spacing between measured points in the direction normal to the phantom shell (Δz_1 in Figure 20, in mm)	5	$10/(f-1)$
For graded grids: Maximum spacing between the two closest measured points in the direction normal to the phantom shell (Δz_1 in Figure 20, in mm)	4	$12/f$
For graded grids: Maximum incremental increase in the spacing between measured points in the direction normal to the phantom shell ($R_z = \Delta z_2/\Delta z_1$ in Figure 20)	1,5	1,5
Minimum edge length of the zoom scan volume in the x- and y-directions (L_z in O.8.3.2, in mm)	30	22
Minimum edge length of the zoom scan volume in the direction normal to the phantom shell (L_h in O.8.3.2 in mm)	30	22
Tolerance in the probe angle	1°	1°

[a] δ is the penetration depth for a plane-wave incident normally on a planar half-space.

[b] This is the maximum spacing allowed, which might not work for all circumstances.

8.6.4 Power Drift Measurement

The Power Drift Measurement job measures the field at the same location as the most recent power reference measurement job within the same procedure, and with the same settings. The Power Drift Measurement gives the field difference in dB from the reading conducted within the last Power Reference Measurement. Several drift measurements are possible for one reference measurement. This allows a user to monitor the power drift of the device under test that must remain within a maximum variation of ±5%. Detail power drift measurement refer to appendix B.

All rights reserved. Unless otherwise specified, no part of this report may be reproduced or utilized in any part, form or by any means, electronic or mechanical, including photocopying and microfilm, without permission in writing from TOWE.

9 Test Equipment list

Manufacturer	Equipment Name	Model	Serial Number	Calibration Date	Due Date of calibration
SPEAG	Twin Phantom	SAM	2173	NCR	NCR
SPEAG	E-Field Probe	EX3DV4	7812	2024/06/25	2025/06/24
SPEAG	Data Acquisition Electronics	DAE4	1847	2024/12/31	2025/12/30
SPEAG	System Validation Kits	D750V3	1231	2023/05/04	2026/05/03
SPEAG	System Validation Kits	D835V2	4d302	2023/02/06	2026/02/05
SPEAG	System Validation Kits	D1750V2	1115	2023/03/23	2026/03/22
SPEAG	System Validation Kits	D1950V3	1266	2023/01/27	2026/01/26
SPEAG	System Validation Kits	D2600V2	1094	2023/03/23	2026/03/22
SPEAG	Dielectric parameter probes	DAK3.5	1341	2024/07/15	2025/07/14
R&S	Vector network analyzer	ZNB8	101413	2024/07/17	2025/07/16
Anritsu	Radio Communication Analyzer	MT8821C	6261991091	2025/03/11	2026/03/10
R&S	Signal Generator	SMR20	100648	2025/03/11	2026/03/10
R&S	AVG Power Sensor	NRP-Z21	101651	2025/03/11	2026/03/10
R&S	AVG Power Sensor	NRP-Z21	104189	2025/03/11	2026/03/10
HAISIDIKE	Thermometer	TP300	TOWE-EQ-SR-023	2025/03/12	2026/03/11
BingYu	Temperature and Humidity Indicator	HTC-1	TOWE-EQ-SR-024	2025/03/12	2026/03/11
Talent Microwave	Directional Coupler	TC-05180-10S	220420003	NCR	NCR
QiJi	Amplifier	YX28982301	TOWE-EQ-SR-020	NCR	NCR
QiJi	Amplifier	YX28982302	TOWE-EQ-SR-021	NCR	NCR

Note:

1. Referring to KDB 865664 D01v01r04, the dipole calibration interval can be extended to 3 years with justification. The dipoles are also not physically damaged or repaired during the interval.

2. The justification data of dipole can be found in Appendix C. The return loss is < -20dB, within 20% of prior calibration, the impedance is within 5 ohm of prior calibration.

All rights reserved. Unless otherwise specified, no part of this report may be reproduced or utilized in any part, form or by any means, electronic or mechanical, including photocopying and microfilm, without permission in writing from TOWE.

10 SAR measurement variability

SAR measurement variability must be assessed for each frequency band, which is determined by the SAR probe calibration point and tissue-equivalent medium used for the device measurements. When both head and body tissue-equivalent media are required for SAR measurements in a frequency band, the variability measurement procedures should be applied to the tissue medium with the highest measured SAR, using the highest measured SAR configuration for that tissue equivalent medium.

The following procedures are applied to determine if repeated measurements are required.

1) Repeated measurement is not required when the original highest measured SAR is < 0.80 or 2 W/kg (1-g or 10-g respectively); steps2) through 4) do not apply.

2) When the original highest measured SAR is ≥ 0.80 or 2 W/kg (1-g or 10-g respectively), repeat that measurement once.

3) Perform a second repeated measurement only if the ratio of largest to smallest SAR for the original and first repeated measurements is > 1.20 or when the original or repeated measurement is ≥ 1.45 or 3.6W/kg (~ 10% from the 1-g or 10-g respective SAR limit).

4) Perform a third repeated measurement only if the original, first or second repeated measurement is ≥1.5 or 3.75 W/kg (1-g or 10-g respectively) and the ratio of largest to smallest SAR for the original, first and second repeated measurements is > 1.20

All rights reserved. Unless otherwise specified, no part of this report may be reproduced or utilized in any part, form or by any means, electronic or mechanical, including photocopying and microfilm, without permission in writing from TOWE.

11 System Verification

11.1 Recipes for Tissue Simulate Liquid

The bellowing tables give the recipes for tissue simulating liquids to be used in different frequency bands:

Ingredients (% by weight)	Frequency (MHz)				
	450	700-900	1750-2000	2300-2500	2500-2700
Water	38.56	40.30	55.24	55.00	54.92
Salt (NaCl)	3.95	1.38	0.31	0.2	0.23
Sucrose	56.32	57.90	0	0	0
HEC	0.98	0.24	0	0	0
Bactericide	0.19	0.18	0	0	0
Tween	0	0	44.45	44.80	44.85

Salt: 99+% Pure Sodium Chloride
Sucrose: 98+% Pure Sucrose
Water: De-ionized, 16 MΩ+ resistivity
HEC: Hydroxyethyl Cellulose
Tween: Polyoxyethylene (20) sorbitan monolaurate

11.2 Tissue Verification

The Conductivity (σ) and Permittivity (ρ) are listed in bellow table. The temperature variation of the Tissue Simulate Liquids was 22±2°C, the liquid depth of the ear reference point or the flat phantom was at least 15 cm (which is shown in Figure 12-1).

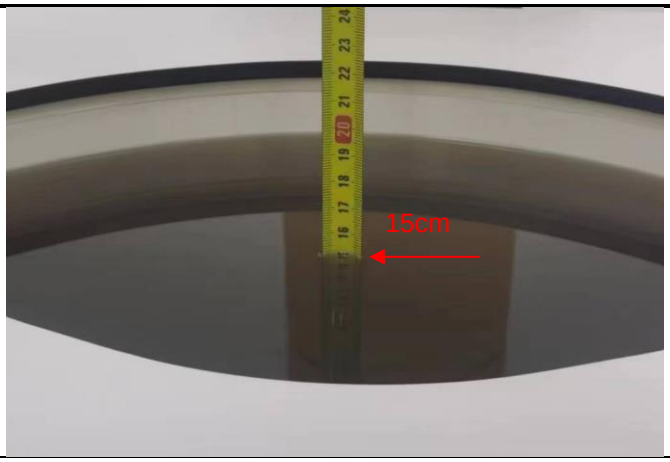

Figure 12-1 Liquid depth in the Flat Phantom

Frequency (MHz)	Tissue Type	Liquid Temp. (℃)	Target Tissue		Measured Tissue		Deviation (Limit ±5%)		Date
			Permittivity ε_r	Conductivity σ(S/m)	Permittivity ε_r	Conductivity σ(S/m)	$\Delta\varepsilon_r$	Δσ	
750	Head	22.3	41.90	0.89	42.70	0.897	1.91%	0.79%	2025/03/27
835	Head	22.2	41.50	0.90	42.00	0.882	1.20%	-2.00%	2025/03/27
1750	Head	21.9	40.10	1.37	41.00	1.380	2.24%	0.73%	2025/03/19
1950	Head	22.0	40.00	1.40	40.30	1.440	0.75%	2.86%	2025/03/19
2600	Head	22.0	39.00	1.96	40.60	1.990	4.10%	1.53%	2025/03/19

Table 1： Measurement Tissue Parameters

All rights reserved. Unless otherwise specified, no part of this report may be reproduced or utilized in any part, form or by any means, electronic or mechanical, including photocopying and microfilm, without permission in writing from TOWE.

11.3 SAR System Check

Prior to SAR assessment, a SAR system Check measurement was performed to see if the measured SAR was within ±10% from the target SAR values. The System Performance Check Setup in Figure 12-3.

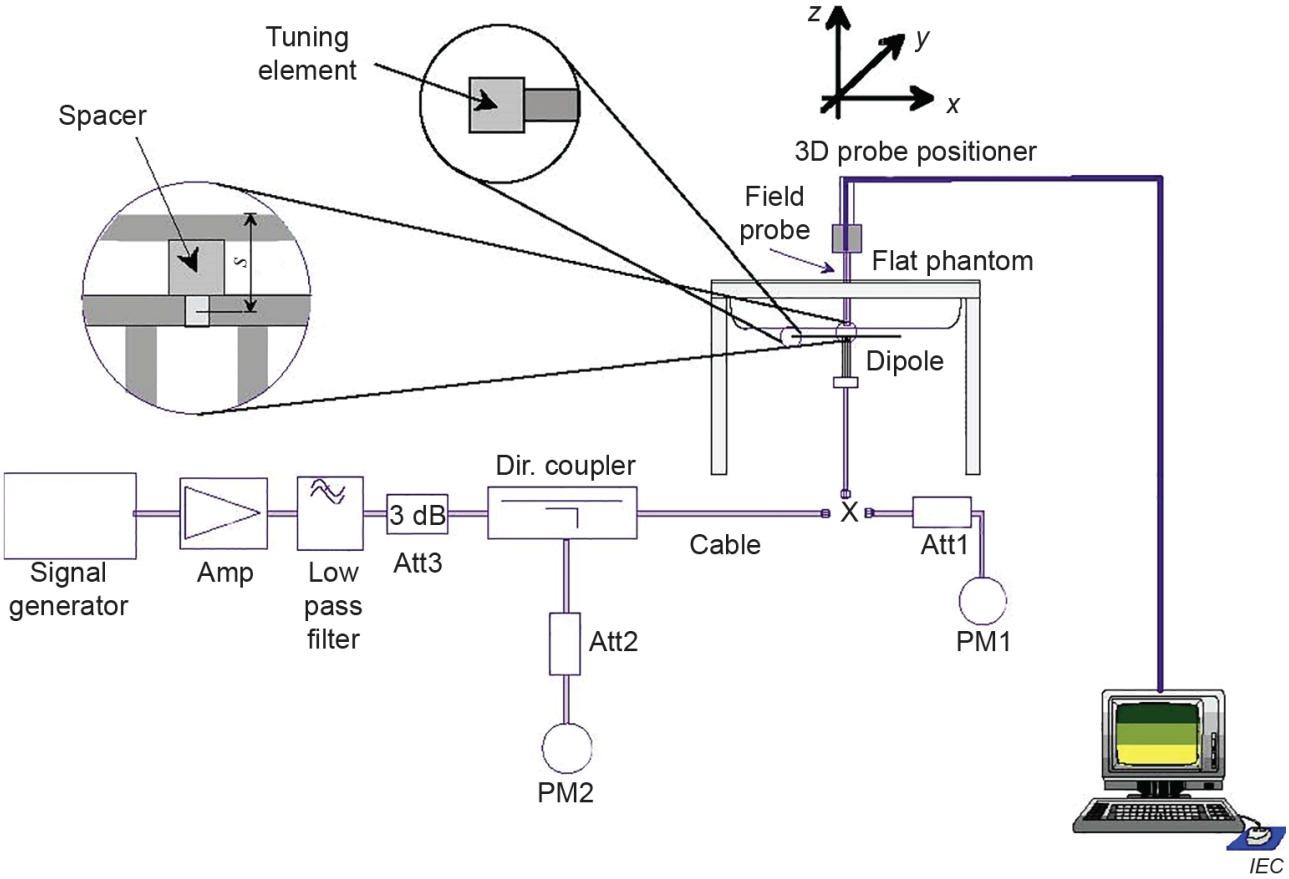

Figure 12-3 System Performance Check Setup

11.3.1 System Check Result

Frequency (MHz)	Tissue Type	Dipole	S/N	Target SAR (1W)		Measured SAR (100mW)		Measured SAR (normalized to 1W)		Deviation (Limit ±10%)		Date
				1g (W/kg)	10g (W/kg)	1g (W/kg)	10g (W/kg)	1g (W/kg)	10g (W/kg)	Δ1g	Δ10g	
750	Head	D750V3	1231	8.67	5.67	0.889	0.580	8.89	5.80	2.54%	2.29%	2025/03/27
835	Head	D835V2	4d302	9.78	6.37	0.957	0.617	9.57	6.17	-2.15%	-3.14%	2025/03/27
1750	Head	D1750V2	1115	36.90	19.50	3.880	2.060	38.80	20.60	5.15%	5.64%	2025/03/19
1950	Head	D1950V3	1266	40.60	20.80	4.120	2.110	41.20	21.10	1.48%	1.44%	2025/03/19
2600	Head	D2600V2	1094	56.30	25.00	5.750	2.590	57.50	25.90	2.13%	3.60%	2025/03/19

Table 2： SAR System Check Result

11.3.2 Detailed System Check Result

Please see the Appendix A

All rights reserved. Unless otherwise specified, no part of this report may be reproduced or utilized in any part, form or by any means, electronic or mechanical, including photocopying and microfilm, without permission in writing from TOWE.

12 SAR General Measurement Procedures

12.1 SAR Measurement Conditions for LTE

LTE modes are tested according to FCC KDB 941225 D05 publication. Establishing connections with base station simulators ensure a consistent means for testing SAR and are recommended for evaluating SAR [4]. The R&S CMW500 or MT8821C simulators are used for LTE output power measurements and SAR testing. Closed loop power control was used so the UE transmits with maximum output power during SAR testing. SAR tests were performed with the same number of RB and RB offsets transmitting on all TTI frames (maximum TTI).

12.1.1 Spectrum Plots for RB Configurations

A properly configured base station simulator was used for SAR tests and power measurements. Therefore, spectrum plots for RB configurations were not required to be included in this report.

12.1.2 MPR

MPR is permanently implemented for this device by the manufacturer. The specific manufacturer target MPR is indicated alongside the SAR results. MPR is enabled for this device, according to 3GPP TS36.101 Section 6.2.3 – 6.2.5 under Table 6.2.3-1.

Modulation	Channel bandwidth/Transmission bandwidth						MPR (dB)
	1.4 MHz	3 MHz	5 MHz	10 MHz	15 MHz	20 MHz	
QPSK	≤ 5	≤ 4	≤ 8	≤ 12	≤ 16	≤ 18	0
QPSK	> 5	> 4	> 8	> 12	> 16	> 18	1
16QAM	≤ 5	≤ 4	≤ 8	≤ 12	≤ 16	≤ 18	1
16QAM	> 5	> 4	> 8	> 12	> 16	> 18	2
64QAM	≤ 5	≤ 4	≤ 8	≤ 12	≤ 16	≤ 18	2
64QAM	> 5	> 4	> 8	> 12	> 16	> 18	3
256QAM	≥1						5

12.1.3 A-MPR

A-MPR (Additional MPR) has been disabled for all SAR tests by setting NS=01 on the base station simulator.

12.1.4 Largest channel bandwidth standalone SAR test requirements

A. QPSK with 1 RB allocation

Start with the largest channel bandwidth and measure SAR for QPSK with 1 RB allocation, using the RB offset and required test channel combination with the highest maximum output power for RB offsets at the upper edge, middle and lower edge of each required test channel. When the reported SAR is ≤ 0.8 W/kg, testing of the remaining RB offset configurations and required test channels is not required for 1 RB allocation; otherwise, SAR is required for the remaining required test channels and only for the RB offset configuration with the highest output power for that channel. When the reported SAR of a required test channel is > 1.45 W/kg, SAR is required for all three RB offset configurations for that required test channel.

B. QPSK with 50% RB allocation

The procedures required for 1 RB allocation in A are applied to measure the SAR for QPSK with 50% RB allocation.

C. QPSK with 100% RB allocation

For QPSK with 100% RB allocation, SAR is not required when the highest maximum output power for 100 % RB allocation is less than the highest maximum output power in 50% and 1 RB allocations and the highest reported SAR for 1 RB and 50% RB allocation in A and B are ≤ 0.8 W/kg. Otherwise, SAR is measured for the highest output power channel and if the reported SAR is > 1.45 W/kg, the remaining required test channels must also be tested.

All rights reserved. Unless otherwise specified, no part of this report may be reproduced or utilized in any part, form or by any means, electronic or mechanical, including photocopying and microfilm, without permission in writing from TOWE.

D. Higher order modulations

For each modulation besides QPSK; e.g., 16-QAM, 64-QAM, apply the QPSK procedures in A, B, and C to determine the QAM configurations that may need SAR measurement. For each configuration identified as required for testing, SAR is required only when the highest maximum output power for the configuration in the higher order modulation is > ½ dB higher than the same configuration in QPSK or when the reported SAR for the QPSK configuration is > 1.45 W/kg.

12.1.5 Other channel bandwidth standalone SAR test requirements

For the other channel bandwidths used by the device in a frequency band, apply all the procedures required for the largest channel bandwidth in 13.4.4 to determine the channels and RB configurations that need SAR testing, then only measure SAR when the highest maximum output power of a configuration requiring testing in the smaller channel bandwidth is > ½ dB higher than the equivalent channel configurations in the largest channel bandwidth configuration, or the reported SAR of a configuration for the largest channel bandwidth is > 1.45 W/kg.

12.1.6 LTE TDD Considerations

For Time-Division Duplex (TDD) systems, SAR must be tested using a fixed periodic duty factor according to the highest transmission duty factor implemented for the device and supported by the defined 3GPP LTE TDD configurations.

SAR was tested with the highest transmission duty factor (63.33%) using Uplink-downlink configuration 0 and Special subframe configuration 7.

LTE TDD Band support 3GPP TS 36.211 section 4.2 for Type 2 Frame Structure and Table 4.2-2 for uplink-downlink configurations and Table 4.2-1 for Special subframe configurations.

Frame structure type 2:

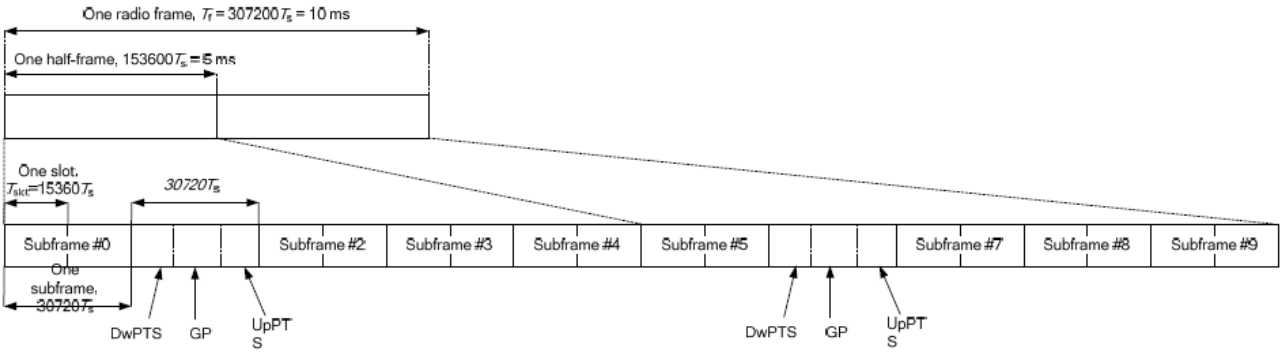

Uplink-downlink configurations

Uplink-downlink configuration	Downlink-to-Uplink Switch-point periodicity	Subframe number									
		0	1	2	3	4	5	6	7	8	9
0	5 ms	D	S	U	U	U	D	S	U	U	U
1	5 ms	D	S	U	U	D	D	S	U	U	D
2	5 ms	D	S	U	D	D	D	S	U	D	D
3	10 ms	D	S	U	U	U	D	D	D	D	D
4	10 ms	D	S	U	U	D	D	D	D	D	D
5	10 ms	D	S	U	D	D	D	D	D	D	D
6	5 ms	D	S	U	U	U	D	S	U	U	D

All rights reserved. Unless otherwise specified, no part of this report may be reproduced or utilized in any part, form or by any means, electronic or mechanical, including photocopying and microfilm, without permission in writing from TOWE.

Configuration of special subframe (lengths of DwPTS/GP/UpPTS).

Special subframe configuration	Normal cyclic prefix in downlink			Extended cyclic prefix in downlink		
	DwPTS	UpPTS		DwPTS	UpPTS	
		Normal cyclic prefix in uplink	Extended cyclic prefix in uplink		Normal cyclic prefix in uplink	Extended cyclic prefix in uplink
0	6592. T_s	2192.T_s	2560.T_s	7680.T_s	2192.T_s	2560.T_s
1	19760.T_s			20480.T_s		
2	21952.T_s			23040.T_s		
3	24144.T_s			25600.T_s		
4	26336.T_s			7680.T_s	4384.T_s	5120.T_s
5	6592.T_s	4384.T_s	5120.T_s	20480.T_s		
6	19760.T_s			23040.T_s		
7	21952.T_s			25600.T_s		
8	24144.T_s			-	-	-
9	13168.T_s			-	-	-

Calculated Duty Cycle=[Extended cyclic prefix in uplink x (Ts) x # of S + # of U]/10ms

Uplink-Downlink Configuration	Downlink-to- Uplink Switch-point Periodicity	Subframe Number										Calculated Duty Cycle (%)
		0	1	2	3	4	5	6	7	8	9	
0	5 ms	D	S	U	U	U	D	S	U	U	U	63.33
1	5 ms	D	S	U	U	D	D	S	U	U	D	43.33
2	5 ms	D	S	U	D	D	D	S	U	D	D	23.33
3	10 ms	D	S	U	U	U	D	D	D	D	D	31.67
4	10 ms	D	S	U	U	D	D	D	D	D	D	21.67
5	10 ms	D	S	U	D	D	D	D	D	D	D	11.67
6	5 ms	D	S	U	U	U	D	S	U	U	D	53.33

Example for calculated Duty Cycle for Uplink-Downlink Configuration 0:
Calculated Duty Cycle = (5120 x (1/(15000 x 2048)) x 2 + 0.006)/0.01 = 63.33 %
Where
Ts = 1/(15000 x 2048) seconds
HPUE:
Calculated Duty Cycle for Uplink-Downlink Configuration 1:
Calculated Duty Cycle =5120*(1/(15000*2048))*2+0.004)/0.01 = 43.33 %

All rights reserved. Unless otherwise specified, no part of this report may be reproduced or utilized in any part, form or by any means, electronic or mechanical, including photocopying and microfilm, without permission in writing from TOWE.

13 Conducted Power

Band	Bandwidth	Modulation	Channel	RB Configuration	Result(dBm)	Tune up(dBm)
Band2	1.4MHz	QPSK	18607	1RB#0	23.31	See Tune up Procedure
Band2	1.4MHz	16QAM	18607	1RB#0	22.87	
Band2	1.4MHz	QPSK	18607	1RB#2	23.29	
Band2	1.4MHz	16QAM	18607	1RB#2	22.83	
Band2	1.4MHz	QPSK	18607	1RB#5	23.13	
Band2	1.4MHz	16QAM	18607	1RB#5	22.71	
Band2	1.4MHz	QPSK	18607	3RB#0	23.19	
Band2	1.4MHz	16QAM	18607	3RB#0	23.22	
Band2	1.4MHz	QPSK	18607	3RB#1	23.33	
Band2	1.4MHz	16QAM	18607	3RB#1	23.25	
Band2	1.4MHz	QPSK	18607	3RB#3	23.36	
Band2	1.4MHz	16QAM	18607	3RB#3	23.29	
Band2	1.4MHz	QPSK	18607	6RB#0	22.61	
Band2	1.4MHz	16QAM	18607	6RB#0	21.64	
Band2	1.4MHz	QPSK	18900	1RB#0	22.84	
Band2	1.4MHz	16QAM	18900	1RB#0	21.64	
Band2	1.4MHz	QPSK	18900	1RB#2	22.84	
Band2	1.4MHz	16QAM	18900	1RB#2	21.66	
Band2	1.4MHz	QPSK	18900	1RB#5	22.83	
Band2	1.4MHz	16QAM	18900	1RB#5	21.60	
Band2	1.4MHz	QPSK	18900	3RB#0	22.71	
Band2	1.4MHz	16QAM	18900	3RB#0	22.68	
Band2	1.4MHz	QPSK	18900	3RB#1	22.79	
Band2	1.4MHz	16QAM	18900	3RB#1	22.76	
Band2	1.4MHz	QPSK	18900	3RB#3	23.00	
Band2	1.4MHz	16QAM	18900	3RB#3	22.98	
Band2	1.4MHz	QPSK	18900	6RB#0	21.88	
Band2	1.4MHz	16QAM	18900	6RB#0	22.40	
Band2	1.4MHz	QPSK	19193	1RB#0	22.77	
Band2	1.4MHz	16QAM	19193	1RB#0	21.80	
Band2	1.4MHz	QPSK	19193	1RB#2	22.70	
Band2	1.4MHz	16QAM	19193	1RB#2	22.00	
Band2	1.4MHz	QPSK	19193	1RB#5	22.67	
Band2	1.4MHz	16QAM	19193	1RB#5	21.85	
Band2	1.4MHz	QPSK	19193	3RB#0	22.61	
Band2	1.4MHz	16QAM	19193	3RB#0	22.56	
Band2	1.4MHz	QPSK	19193	3RB#1	22.66	
Band2	1.4MHz	16QAM	19193	3RB#1	22.62	
Band2	1.4MHz	QPSK	19193	3RB#3	22.83	
Band2	1.4MHz	16QAM	19193	3RB#3	22.79	
Band2	1.4MHz	QPSK	19193	6RB#0	21.98	
Band2	1.4MHz	16QAM	19193	6RB#0	22.00	
Band2	3MHz	QPSK	18615	1RB#0	23.28	
Band2	3MHz	16QAM	18615	1RB#0	23.00	
Band2	3MHz	QPSK	18615	1RB#8	23.10	
Band2	3MHz	16QAM	18615	1RB#8	22.46	
Band2	3MHz	QPSK	18615	1RB#14	22.90	
Band2	3MHz	16QAM	18615	1RB#14	22.30	
Band2	3MHz	QPSK	18615	8RB#0	22.52	
Band2	3MHz	16QAM	18615	8RB#0	22.49	
Band2	3MHz	QPSK	18615	8RB#4	22.47	
Band2	3MHz	16QAM	18615	8RB#4	22.43	
Band2	3MHz	QPSK	18615	8RB#7	22.42	
Band2	3MHz	16QAM	18615	8RB#7	22.52	
Band2	3MHz	QPSK	18615	15RB#0	22.50	
Band2	3MHz	16QAM	18615	15RB#0	21.55	
Band2	3MHz	QPSK	18900	1RB#0	23.14	

All rights reserved. Unless otherwise specified, no part of this report may be reproduced or utilized in any part, form or by any means, electronic or mechanical, including photocopying and microfilm, without permission in writing from TOWE.

Band2	3MHz	16QAM	18900	1RB#0	23.02	See Tune up Procedure
Band2	3MHz	QPSK	18900	1RB#8	23.10	
Band2	3MHz	16QAM	18900	1RB#8	22.59	
Band2	3MHz	QPSK	18900	1RB#14	23.34	
Band2	3MHz	16QAM	18900	1RB#14	22.41	
Band2	3MHz	QPSK	18900	8RB#0	22.51	
Band2	3MHz	16QAM	18900	8RB#0	22.43	
Band2	3MHz	QPSK	18900	8RB#4	22.39	
Band2	3MHz	16QAM	18900	8RB#4	22.46	
Band2	3MHz	QPSK	18900	8RB#7	22.41	
Band2	3MHz	16QAM	18900	8RB#7	22.37	
Band2	3MHz	QPSK	18900	15RB#0	22.33	
Band2	3MHz	16QAM	18900	15RB#0	22.42	
Band2	3MHz	QPSK	19185	1RB#0	22.77	
Band2	3MHz	16QAM	19185	1RB#0	22.00	
Band2	3MHz	QPSK	19185	1RB#8	22.95	
Band2	3MHz	16QAM	19185	1RB#8	22.73	
Band2	3MHz	QPSK	19185	1RB#14	23.15	
Band2	3MHz	16QAM	19185	1RB#14	22.42	
Band2	3MHz	QPSK	19185	8RB#0	22.35	
Band2	3MHz	16QAM	19185	8RB#0	22.23	
Band2	3MHz	QPSK	19185	8RB#4	22.26	
Band2	3MHz	16QAM	19185	8RB#4	22.17	
Band2	3MHz	QPSK	19185	8RB#7	22.10	
Band2	3MHz	16QAM	19185	8RB#7	22.05	
Band2	3MHz	QPSK	19185	15RB#0	21.99	
Band2	3MHz	16QAM	19185	15RB#0	22.32	
Band2	5MHz	QPSK	18625	1RB#0	23.01	
Band2	5MHz	16QAM	18625	1RB#0	22.75	
Band2	5MHz	QPSK	18625	1RB#12	23.19	
Band2	5MHz	16QAM	18625	1RB#12	22.40	
Band2	5MHz	QPSK	18625	1RB#24	22.87	
Band2	5MHz	16QAM	18625	1RB#24	22.11	
Band2	5MHz	QPSK	18625	12RB#0	22.72	
Band2	5MHz	16QAM	18625	12RB#0	22.72	
Band2	5MHz	QPSK	18625	12RB#6	22.72	
Band2	5MHz	16QAM	18625	12RB#6	22.72	
Band2	5MHz	QPSK	18625	12RB#13	22.38	
Band2	5MHz	16QAM	18625	12RB#13	22.40	
Band2	5MHz	QPSK	18625	25RB#0	22.57	
Band2	5MHz	16QAM	18625	25RB#0	21.51	
Band2	5MHz	QPSK	18900	1RB#0	23.30	
Band2	5MHz	16QAM	18900	1RB#0	22.66	
Band2	5MHz	QPSK	18900	1RB#12	22.93	
Band2	5MHz	16QAM	18900	1RB#12	22.01	
Band2	5MHz	QPSK	18900	1RB#24	23.06	
Band2	5MHz	16QAM	18900	1RB#24	22.50	
Band2	5MHz	QPSK	18900	12RB#0	22.56	
Band2	5MHz	16QAM	18900	12RB#0	22.48	
Band2	5MHz	QPSK	18900	12RB#6	22.44	
Band2	5MHz	16QAM	18900	12RB#6	22.45	
Band2	5MHz	QPSK	18900	12RB#13	22.39	
Band2	5MHz	16QAM	18900	12RB#13	22.41	
Band2	5MHz	QPSK	18900	25RB#0	22.35	
Band2	5MHz	16QAM	18900	25RB#0	21.34	
Band2	5MHz	QPSK	19175	1RB#0	22.51	
Band2	5MHz	16QAM	19175	1RB#0	21.68	
Band2	5MHz	QPSK	19175	1RB#12	22.70	
Band2	5MHz	16QAM	19175	1RB#12	21.99	
Band2	5MHz	QPSK	19175	1RB#24	22.66	

All rights reserved. Unless otherwise specified, no part of this report may be reproduced or utilized in any part, form or by any means, electronic or mechanical, including photocopying and microfilm, without permission in writing from TOWE.

Band2	5MHz	16QAM	19175	1RB#24	21.96	See Tune up Procedure
Band2	5MHz	QPSK	19175	12RB#0	21.79	
Band2	5MHz	16QAM	19175	12RB#0	21.81	
Band2	5MHz	QPSK	19175	12RB#6	21.82	
Band2	5MHz	16QAM	19175	12RB#6	21.82	
Band2	5MHz	QPSK	19175	12RB#13	22.23	
Band2	5MHz	16QAM	19175	12RB#13	22.22	
Band2	5MHz	QPSK	19175	25RB#0	22.14	
Band2	5MHz	16QAM	19175	25RB#0	22.85	
Band2	10MHz	QPSK	18650	1RB#0	23.32	
Band2	10MHz	16QAM	18650	1RB#0	22.71	
Band2	10MHz	QPSK	18650	1RB#24	22.97	
Band2	10MHz	16QAM	18650	1RB#24	22.45	
Band2	10MHz	QPSK	18650	1RB#49	22.84	
Band2	10MHz	16QAM	18650	1RB#49	22.37	
Band2	10MHz	QPSK	18650	25RB#0	22.50	
Band2	10MHz	16QAM	18650	25RB#0	22.47	
Band2	10MHz	QPSK	18650	25RB#12	22.45	
Band2	10MHz	16QAM	18650	25RB#13	22.45	
Band2	10MHz	QPSK	18650	25RB#25	22.46	
Band2	10MHz	16QAM	18650	25RB#25	22.47	
Band2	10MHz	QPSK	18650	50RB#0	22.31	
Band2	10MHz	QPSK	18900	1RB#0	22.74	
Band2	10MHz	16QAM	18900	1RB#0	22.82	
Band2	10MHz	QPSK	18900	1RB#24	23.12	
Band2	10MHz	16QAM	18900	1RB#24	22.27	
Band2	10MHz	QPSK	18900	1RB#49	22.64	
Band2	10MHz	16QAM	18900	1RB#49	22.27	
Band2	10MHz	QPSK	18900	25RB#0	22.75	
Band2	10MHz	16QAM	18900	25RB#0	22.77	
Band2	10MHz	QPSK	18900	25RB#13	22.76	
Band2	10MHz	16QAM	18900	25RB#13	22.75	
Band2	10MHz	QPSK	18900	25RB#25	22.54	
Band2	10MHz	16QAM	18900	25RB#25	22.54	
Band2	10MHz	QPSK	18900	50RB#0	22.49	
Band2	10MHz	QPSK	19150	1RB#0	22.98	
Band2	10MHz	16QAM	19150	1RB#0	22.14	
Band2	10MHz	QPSK	19150	1RB#24	22.84	
Band2	10MHz	16QAM	19150	1RB#24	21.67	
Band2	10MHz	QPSK	19150	1RB#49	22.77	
Band2	10MHz	16QAM	19150	1RB#49	22.05	
Band2	10MHz	QPSK	19150	25RB#0	21.99	
Band2	10MHz	16QAM	19150	25RB#0	21.95	
Band2	10MHz	QPSK	19150	25RB#13	21.94	
Band2	10MHz	16QAM	19150	25RB#13	21.90	
Band2	10MHz	QPSK	19150	25RB#25	22.31	
Band2	10MHz	16QAM	19150	25RB#25	22.27	
Band2	10MHz	QPSK	19150	50RB#0	21.72	
Band2	15MHz	QPSK	18675	1RB#0	23.14	
Band2	15MHz	16QAM	18675	1RB#0	23.29	
Band2	15MHz	QPSK	18675	1RB#38	23.20	
Band2	15MHz	16QAM	18675	1RB#38	22.89	
Band2	15MHz	QPSK	18675	1RB#74	23.18	
Band2	15MHz	16QAM	18675	1RB#74	23.15	
Band2	15MHz	QPSK	18675	38RB#0	23.09	
Band2	15MHz	16QAM	18675	38RB#0	23.09	
Band2	15MHz	QPSK	18675	38RB#18	23.09	
Band2	15MHz	16QAM	18675	38RB#18	23.09	
Band2	15MHz	QPSK	18675	38RB#37	23.10	
Band2	15MHz	16QAM	18675	38RB#37	23.10	

All rights reserved. Unless otherwise specified, no part of this report may be reproduced or utilized in any part, form or by any means, electronic or mechanical, including photocopying and microfilm, without permission in writing from TOWE.

Band2	15MHz	QPSK	18675	75RB#0	22.00	See Tune up Procedure
Band2	15MHz	QPSK	18900	1RB#0	23.12	
Band2	15MHz	16QAM	18900	1RB#0	22.99	
Band2	15MHz	QPSK	18900	1RB#38	23.20	
Band2	15MHz	16QAM	18900	1RB#38	23.04	
Band2	15MHz	QPSK	18900	1RB#74	23.31	
Band2	15MHz	16QAM	18900	1RB#74	23.10	
Band2	15MHz	QPSK	18900	38RB#0	23.23	
Band2	15MHz	16QAM	18900	38RB#0	23.19	
Band2	15MHz	QPSK	18900	38RB#18	23.17	
Band2	15MHz	16QAM	18900	38RB#18	23.15	
Band2	15MHz	QPSK	18900	38RB#37	23.26	
Band2	15MHz	16QAM	18900	38RB#37	23.24	
Band2	15MHz	QPSK	19125	1RB#0	23.21	
Band2	15MHz	16QAM	19125	1RB#0	23.19	
Band2	15MHz	QPSK	19125	1RB#38	23.30	
Band2	15MHz	16QAM	19125	1RB#38	22.84	
Band2	15MHz	QPSK	19125	1RB#74	23.39	
Band2	15MHz	QPSK	18900	75RB#0	22.69	
Band2	15MHz	16QAM	19125	1RB#74	22.99	
Band2	15MHz	QPSK	19125	38RB#0	22.73	
Band2	15MHz	16QAM	19125	38RB#0	22.82	
Band2	15MHz	QPSK	19125	38RB#18	22.80	
Band2	15MHz	16QAM	19125	38RB#18	22.77	
Band2	15MHz	QPSK	19125	38RB#37	22.77	
Band2	15MHz	16QAM	19125	38RB#37	22.76	
Band2	20MHz	QPSK	18700	1RB#0	23.00	
Band2	15MHz	QPSK	19125	75RB#0	21.96	
Band2	20MHz	16QAM	18700	1RB#0	23.23	
Band2	20MHz	QPSK	18700	1RB#49	23.18	
Band2	20MHz	16QAM	18700	1RB#49	23.25	
Band2	20MHz	QPSK	18700	1RB#99	23.32	
Band2	20MHz	16QAM	18700	1RB#99	23.14	
Band2	20MHz	QPSK	18700	50RB#0	22.92	
Band2	20MHz	16QAM	18700	50RB#0	22.89	
Band2	20MHz	QPSK	18700	50RB#25	22.87	
Band2	20MHz	16QAM	18700	50RB#25	22.85	
Band2	20MHz	QPSK	18700	50RB#50	23.11	
Band2	20MHz	16QAM	18700	50RB#50	23.16	
Band2	20MHz	QPSK	18900	1RB#0	23.24	
Band2	20MHz	16QAM	18900	1RB#0	23.09	
Band2	20MHz	QPSK	18900	1RB#49	23.21	
Band2	20MHz	16QAM	18900	1RB#49	22.92	
Band2	20MHz	QPSK	18900	1RB#99	23.13	
Band2	20MHz	16QAM	18900	1RB#99	22.96	
Band2	20MHz	QPSK	18900	50RB#0	23.25	
Band2	20MHz	QPSK	18700	100RB#0	22.98	
Band2	20MHz	16QAM	18900	50RB#0	23.22	
Band2	20MHz	QPSK	18900	50RB#25	23.17	
Band2	20MHz	16QAM	18900	50RB#25	23.29	
Band2	20MHz	QPSK	18900	50RB#50	23.18	
Band2	20MHz	16QAM	18900	50RB#50	23.18	
Band2	20MHz	QPSK	19100	1RB#0	23.16	
Band2	20MHz	16QAM	19100	1RB#0	23.07	
Band2	20MHz	QPSK	19100	1RB#49	23.10	
Band2	20MHz	QPSK	18900	100RB#0	22.08	
Band2	20MHz	16QAM	19100	1RB#49	23.16	
Band2	20MHz	QPSK	19100	1RB#99	23.00	
Band2	20MHz	16QAM	19100	1RB#99	23.25	
Band2	20MHz	QPSK	19100	50RB#0	22.99	

All rights reserved. Unless otherwise specified, no part of this report may be reproduced or utilized in any part, form or by any means, electronic or mechanical, including photocopying and microfilm, without permission in writing from TOWE.

Band2	20MHz	16QAM	19100	50RB#0	23.09	See Tune up Procedure
Band2	20MHz	QPSK	19100	50RB#25	23.07	
Band2	20MHz	16QAM	19100	50RB#25	23.05	
Band2	20MHz	QPSK	19100	50RB#50	22.88	
Band2	20MHz	16QAM	19100	50RB#50	22.84	
Band2	20MHz	QPSK	19100	100RB#0	22.69	

Band	Bandwidth	Modulation	Channel	RB Configuration	Result(dBm)	Tune up(dBm)
Band25	1.4MHz	QPSK	26047	1RB#0	23.12	See Tune up Procedure
Band25	1.4MHz	16QAM	26047	1RB#0	23.11	
Band25	1.4MHz	QPSK	26047	1RB#2	23.01	
Band25	1.4MHz	16QAM	26047	1RB#2	23.05	
Band25	1.4MHz	QPSK	26047	1RB#5	22.97	
Band25	1.4MHz	16QAM	26047	1RB#5	23.07	
Band25	1.4MHz	QPSK	26047	3RB#0	22.95	
Band25	1.4MHz	16QAM	26047	3RB#0	23.00	
Band25	1.4MHz	QPSK	26047	3RB#1	22.96	
Band25	1.4MHz	16QAM	26047	3RB#1	22.93	
Band25	1.4MHz	QPSK	26047	3RB#3	22.98	
Band25	1.4MHz	16QAM	26047	3RB#3	23.03	
Band25	1.4MHz	QPSK	26047	6RB#0	22.39	
Band25	1.4MHz	16QAM	26047	6RB#0	22.44	
Band25	1.4MHz	QPSK	26365	1RB#0	22.74	
Band25	1.4MHz	16QAM	26365	1RB#0	22.62	
Band25	1.4MHz	QPSK	26365	1RB#2	22.91	
Band25	1.4MHz	16QAM	26365	1RB#2	22.86	
Band25	1.4MHz	QPSK	26365	1RB#5	22.68	
Band25	1.4MHz	16QAM	26365	1RB#5	22.65	
Band25	1.4MHz	QPSK	26365	3RB#0	22.73	
Band25	1.4MHz	16QAM	26365	3RB#0	22.69	
Band25	1.4MHz	QPSK	26365	3RB#1	22.70	
Band25	1.4MHz	16QAM	26365	3RB#1	22.68	
Band25	1.4MHz	QPSK	26365	3RB#3	23.15	
Band25	1.4MHz	16QAM	26365	3RB#3	23.12	
Band25	1.4MHz	QPSK	26365	6RB#0	22.67	
Band25	1.4MHz	16QAM	26365	6RB#0	21.72	
Band25	1.4MHz	QPSK	26683	1RB#0	22.32	
Band25	1.4MHz	16QAM	26683	1RB#0	22.35	
Band25	1.4MHz	QPSK	26683	1RB#2	21.79	
Band25	1.4MHz	16QAM	26683	1RB#2	21.34	
Band25	1.4MHz	QPSK	26683	1RB#5	21.72	
Band25	1.4MHz	16QAM	26683	1RB#5	21.47	
Band25	1.4MHz	QPSK	26683	3RB#0	21.94	
Band25	1.4MHz	16QAM	26683	3RB#0	21.85	
Band25	1.4MHz	QPSK	26683	3RB#1	21.83	
Band25	1.4MHz	16QAM	26683	3RB#1	21.90	
Band25	1.4MHz	QPSK	26683	3RB#3	21.70	
Band25	1.4MHz	16QAM	26683	3RB#3	21.63	
Band25	1.4MHz	QPSK	26683	6RB#0	22.31	
Band25	1.4MHz	16QAM	26683	6RB#0	22.68	
Band25	3MHz	QPSK	26055	1RB#0	23.04	
Band25	3MHz	16QAM	26055	1RB#0	22.33	
Band25	3MHz	QPSK	26055	1RB#8	22.68	
Band25	3MHz	16QAM	26055	1RB#8	23.12	
Band25	3MHz	QPSK	26055	1RB#14	22.59	
Band25	3MHz	16QAM	26055	1RB#14	23.09	
Band25	3MHz	QPSK	26055	8RB#0	22.23	
Band25	3MHz	16QAM	26055	8RB#0	22.23	
Band25	3MHz	QPSK	26055	8RB#4	22.23	

All rights reserved. Unless otherwise specified, no part of this report may be reproduced or utilized in any part, form or by any means, electronic or mechanical, including photocopying and microfilm, without permission in writing from TOWE.

Band25	3MHz	16QAM	26055	8RB#4	22.22	See Tune up Procedure
Band25	3MHz	QPSK	26055	8RB#7	22.22	
Band25	3MHz	16QAM	26055	8RB#7	22.23	
Band25	3MHz	QPSK	26055	15RB#0	22.24	
Band25	3MHz	16QAM	26055	15RB#0	22.21	
Band25	3MHz	QPSK	26365	1RB#0	21.91	
Band25	3MHz	16QAM	26365	1RB#0	23.12	
Band25	3MHz	QPSK	26365	1RB#8	22.59	
Band25	3MHz	16QAM	26365	1RB#8	22.81	
Band25	3MHz	QPSK	26365	1RB#14	22.58	
Band25	3MHz	16QAM	26365	1RB#14	22.79	
Band25	3MHz	QPSK	26365	8RB#0	23.14	
Band25	3MHz	16QAM	26365	8RB#0	23.15	
Band25	3MHz	QPSK	26365	8RB#4	23.15	
Band25	3MHz	16QAM	26365	8RB#4	23.13	
Band25	3MHz	QPSK	26365	8RB#7	23.15	
Band25	3MHz	16QAM	26365	8RB#7	23.17	
Band25	3MHz	QPSK	26365	15RB#0	23.15	
Band25	3MHz	16QAM	26365	15RB#0	22.02	
Band25	3MHz	QPSK	26675	1RB#0	22.92	
Band25	3MHz	16QAM	26675	1RB#0	21.60	
Band25	3MHz	QPSK	26675	1RB#8	22.28	
Band25	3MHz	16QAM	26675	1RB#8	22.21	
Band25	3MHz	QPSK	26675	1RB#14	21.93	
Band25	3MHz	16QAM	26675	1RB#14	22.03	
Band25	3MHz	QPSK	26675	8RB#0	21.43	
Band25	3MHz	16QAM	26675	8RB#0	21.43	
Band25	3MHz	QPSK	26675	8RB#4	21.42	
Band25	3MHz	16QAM	26675	8RB#4	21.42	
Band25	3MHz	QPSK	26675	8RB#7	21.42	
Band25	3MHz	16QAM	26675	8RB#7	21.40	
Band25	3MHz	QPSK	26675	15RB#0	21.40	
Band25	3MHz	16QAM	26675	15RB#0	21.98	
Band25	5MHz	QPSK	26065	1RB#0	22.77	
Band25	5MHz	16QAM	26065	1RB#0	22.99	
Band25	5MHz	QPSK	26065	1RB#12	22.49	
Band25	5MHz	16QAM	26065	1RB#12	22.75	
Band25	5MHz	QPSK	26065	1RB#24	23.04	
Band25	5MHz	16QAM	26065	1RB#24	22.32	
Band25	5MHz	QPSK	26065	12RB#0	23.07	
Band25	5MHz	16QAM	26065	12RB#0	23.08	
Band25	5MHz	QPSK	26065	12RB#6	23.08	
Band25	5MHz	16QAM	26065	12RB#6	23.07	
Band25	5MHz	QPSK	26065	12RB#13	22.87	
Band25	5MHz	16QAM	26065	12RB#13	22.88	
Band25	5MHz	QPSK	26065	25RB#0	22.93	
Band25	5MHz	16QAM	26065	25RB#0	21.99	
Band25	5MHz	QPSK	26365	1RB#0	22.58	
Band25	5MHz	16QAM	26365	1RB#0	22.94	
Band25	5MHz	QPSK	26365	1RB#12	22.50	
Band25	5MHz	16QAM	26365	1RB#12	22.58	
Band25	5MHz	QPSK	26365	1RB#24	22.64	
Band25	5MHz	16QAM	26365	1RB#24	22.77	
Band25	5MHz	QPSK	26365	12RB#0	22.67	
Band25	5MHz	16QAM	26365	12RB#0	22.68	
Band25	5MHz	QPSK	26365	12RB#6	22.68	
Band25	5MHz	16QAM	26365	12RB#6	22.69	
Band25	5MHz	QPSK	26365	12RB#13	22.57	
Band25	5MHz	16QAM	26365	12RB#13	22.57	
Band25	5MHz	QPSK	26365	25RB#0	22.58	

All rights reserved. Unless otherwise specified, no part of this report may be reproduced or utilized in any part, form or by any means, electronic or mechanical, including photocopying and microfilm, without permission in writing from TOWE.

Band25	5MHz	16QAM	26365	25RB#0	21.57	See Tune up Procedure
Band25	5MHz	QPSK	26665	1RB#0	22.25	
Band25	5MHz	16QAM	26665	1RB#0	22.42	
Band25	5MHz	QPSK	26665	1RB#12	22.71	
Band25	5MHz	16QAM	26665	1RB#12	21.65	
Band25	5MHz	QPSK	26665	1RB#24	21.84	
Band25	5MHz	16QAM	26665	1RB#24	21.90	
Band25	5MHz	QPSK	26665	12RB#0	21.93	
Band25	5MHz	16QAM	26665	12RB#0	21.93	
Band25	5MHz	QPSK	26665	12RB#6	21.94	
Band25	5MHz	16QAM	26665	12RB#6	21.93	
Band25	5MHz	QPSK	26665	12RB#13	21.42	
Band25	5MHz	16QAM	26665	12RB#13	21.42	
Band25	5MHz	QPSK	26665	25RB#0	21.78	
Band25	5MHz	16QAM	26665	25RB#0	22.85	
Band25	10MHz	QPSK	26090	1RB#0	23.11	
Band25	10MHz	16QAM	26090	1RB#0	23.15	
Band25	10MHz	QPSK	26090	1RB#24	22.72	
Band25	10MHz	16QAM	26090	1RB#24	23.10	
Band25	10MHz	QPSK	26090	1RB#49	23.13	
Band25	10MHz	16QAM	26090	1RB#49	23.18	
Band25	10MHz	QPSK	26090	25RB#0	23.23	
Band25	10MHz	16QAM	26090	25RB#0	23.20	
Band25	10MHz	QPSK	26090	25RB#13	23.16	
Band25	10MHz	16QAM	26090	25RB#13	23.16	
Band25	10MHz	QPSK	26090	25RB#25	22.79	
Band25	10MHz	16QAM	26090	25RB#25	22.79	
Band25	10MHz	QPSK	26090	50RB#0	23.02	
Band25	10MHz	QPSK	26365	1RB#0	22.32	
Band25	10MHz	16QAM	26365	1RB#0	23.09	
Band25	10MHz	QPSK	26365	1RB#24	22.74	
Band25	10MHz	16QAM	26365	1RB#24	22.72	
Band25	10MHz	QPSK	26365	1RB#49	22.85	
Band25	10MHz	16QAM	26365	1RB#49	22.87	
Band25	10MHz	QPSK	26365	25RB#0	23.11	
Band25	10MHz	16QAM	26365	25RB#0	23.06	
Band25	10MHz	QPSK	26365	25RB#13	23.05	
Band25	10MHz	16QAM	26365	25RB#13	23.14	
Band25	10MHz	QPSK	26365	25RB#25	23.10	
Band25	10MHz	16QAM	26365	25RB#25	23.09	
Band25	10MHz	QPSK	26365	50RB#0	22.93	
Band25	10MHz	QPSK	26640	1RB#0	23.28	
Band25	10MHz	16QAM	26640	1RB#0	22.38	
Band25	10MHz	QPSK	26640	1RB#24	23.21	
Band25	10MHz	16QAM	26640	1RB#24	22.34	
Band25	10MHz	QPSK	26640	1RB#49	22.27	
Band25	10MHz	16QAM	26640	1RB#49	22.70	
Band25	10MHz	QPSK	26640	25RB#0	22.55	
Band25	10MHz	16QAM	26640	25RB#0	22.63	
Band25	10MHz	QPSK	26640	25RB#13	22.61	
Band25	10MHz	16QAM	26640	25RB#13	22.59	
Band25	10MHz	QPSK	26640	25RB#25	22.10	
Band25	10MHz	16QAM	26640	25RB#25	22.02	
Band25	10MHz	QPSK	26640	50RB#0	22.12	
Band25	15MHz	QPSK	26115	1RB#0	22.23	
Band25	15MHz	16QAM	26115	1RB#0	22.59	
Band25	15MHz	QPSK	26115	1RB#38	22.90	
Band25	15MHz	16QAM	26115	1RB#38	22.38	
Band25	15MHz	QPSK	26115	1RB#74	22.73	
Band25	15MHz	16QAM	26115	1RB#74	23.19	

All rights reserved. Unless otherwise specified, no part of this report may be reproduced or utilized in any part, form or by any means, electronic or mechanical, including photocopying and microfilm, without permission in writing from TOWE.

Band25	15MHz	QPSK	26115	38RB#0	23.19	See Tune up Procedure
Band25	15MHz	16QAM	26115	38RB#0	23.18	
Band25	15MHz	QPSK	26115	38RB#18	23.18	
Band25	15MHz	16QAM	26115	38RB#18	23.16	
Band25	15MHz	QPSK	26115	38RB#37	23.16	
Band25	15MHz	16QAM	26115	38RB#37	22.27	
Band25	15MHz	QPSK	26115	75RB#0	22.27	
Band25	15MHz	QPSK	26365	1RB#0	22.76	
Band25	15MHz	16QAM	26365	1RB#0	22.23	
Band25	15MHz	QPSK	26365	1RB#38	22.49	
Band25	15MHz	16QAM	26365	1RB#38	22.64	
Band25	15MHz	QPSK	26365	1RB#74	22.80	
Band25	15MHz	16QAM	26365	1RB#74	22.40	
Band25	15MHz	QPSK	26365	38RB#0	22.46	
Band25	15MHz	16QAM	26365	38RB#0	22.43	
Band25	15MHz	QPSK	26365	38RB#18	22.43	
Band25	15MHz	16QAM	26365	38RB#18	22.41	
Band25	15MHz	QPSK	26365	38RB#37	22.41	
Band25	15MHz	16QAM	26365	38RB#37	22.40	
Band25	15MHz	QPSK	26365	75RB#0	22.40	
Band25	15MHz	QPSK	26615	1RB#0	22.48	
Band25	15MHz	16QAM	26615	1RB#0	22.51	
Band25	15MHz	QPSK	26615	1RB#38	22.77	
Band25	15MHz	16QAM	26615	1RB#38	22.31	
Band25	15MHz	QPSK	26615	1RB#74	22.71	
Band25	15MHz	16QAM	26615	1RB#74	22.84	
Band25	15MHz	QPSK	26615	38RB#0	22.30	
Band25	15MHz	16QAM	26615	38RB#0	22.40	
Band25	15MHz	QPSK	26615	38RB#18	22.39	
Band25	15MHz	16QAM	26615	38RB#18	22.36	
Band25	15MHz	QPSK	26615	38RB#37	22.36	
Band25	15MHz	16QAM	26615	38RB#37	22.32	
Band25	15MHz	QPSK	26615	75RB#0	22.33	
Band25	20MHz	QPSK	26140	1RB#0	22.37	
Band25	20MHz	16QAM	26140	1RB#0	23.00	
Band25	20MHz	QPSK	26140	1RB#49	**23.16**	
Band25	20MHz	16QAM	26140	1RB#49	22.74	
Band25	20MHz	QPSK	26140	1RB#99	22.41	
Band25	20MHz	16QAM	26140	1RB#99	23.12	
Band25	20MHz	QPSK	26140	50RB#0	23.00	
Band25	20MHz	16QAM	26140	50RB#0	23.00	
Band25	20MHz	QPSK	26140	50RB#25	22.99	
Band25	20MHz	16QAM	26140	50RB#25	22.97	
Band25	20MHz	QPSK	26140	50RB#50	23.24	
Band25	20MHz	16QAM	26140	50RB#50	23.21	
Band25	20MHz	QPSK	26140	100RB#0	23.02	
Band25	20MHz	QPSK	26365	1RB#0	**22.98**	
Band25	20MHz	16QAM	26365	1RB#0	22.63	
Band25	20MHz	QPSK	26365	1RB#49	22.51	
Band25	20MHz	16QAM	26365	1RB#49	22.39	
Band25	20MHz	QPSK	26365	1RB#99	22.55	
Band25	20MHz	16QAM	26365	1RB#99	22.94	
Band25	20MHz	QPSK	26365	50RB#0	**23.26**	
Band25	20MHz	16QAM	26365	50RB#0	23.20	
Band25	20MHz	QPSK	26365	50RB#25	23.20	
Band25	20MHz	16QAM	26365	50RB#25	23.16	
Band25	20MHz	QPSK	26365	50RB#50	22.63	
Band25	20MHz	16QAM	26365	50RB#50	22.66	
Band25	20MHz	QPSK	26365	100RB#0	**22.36**	
Band25	20MHz	QPSK	26590	1RB#0	23.17	

All rights reserved. Unless otherwise specified, no part of this report may be reproduced or utilized in any part, form or by any means, electronic or mechanical, including photocopying and microfilm, without permission in writing from TOWE.

Band25	20MHz	16QAM	26590	1RB#0	22.81	See Tune up Procedure
Band25	20MHz	QPSK	26590	1RB#49	**23.17**	
Band25	20MHz	16QAM	26590	1RB#49	22.55	
Band25	20MHz	QPSK	26590	1RB#99	22.78	
Band25	20MHz	16QAM	26590	1RB#99	22.56	
Band25	20MHz	QPSK	26590	50RB#0	22.25	
Band25	20MHz	16QAM	26590	50RB#0	22.23	
Band25	20MHz	QPSK	26590	50RB#25	22.23	
Band25	20MHz	16QAM	26590	50RB#25	22.22	
Band25	20MHz	QPSK	26590	50RB#50	22.20	
Band25	20MHz	16QAM	26590	50RB#50	23.15	
Band25	20MHz	QPSK	26590	100RB#0	23.08	

Band	Bandwidth	Modulation	Channel	RB Configuration	Result(dBm)	Tune up(dBm)
Band4	1.4MHz	QPSK	19957	1RB#0	21.32	See Tune up Procedure
Band4	1.4MHz	16QAM	19957	1RB#0	22.23	
Band4	1.4MHz	QPSK	19957	1RB#2	22.61	
Band4	1.4MHz	16QAM	19957	1RB#2	22.56	
Band4	1.4MHz	QPSK	19957	1RB#5	22.74	
Band4	1.4MHz	16QAM	19957	1RB#5	22.42	
Band4	1.4MHz	QPSK	19957	3RB#0	22.35	
Band4	1.4MHz	16QAM	19957	3RB#0	22.62	
Band4	1.4MHz	QPSK	19957	3RB#1	22.68	
Band4	1.4MHz	16QAM	19957	3RB#1	22.52	
Band4	1.4MHz	QPSK	19957	3RB#3	22.84	
Band4	1.4MHz	16QAM	19957	3RB#3	22.48	
Band4	1.4MHz	QPSK	19957	6RB#0	22.15	
Band4	1.4MHz	16QAM	19957	6RB#0	22.36	
Band4	1.4MHz	QPSK	20175	1RB#0	22.58	
Band4	1.4MHz	16QAM	20175	1RB#0	22.07	
Band4	1.4MHz	QPSK	20175	1RB#2	23.18	
Band4	1.4MHz	16QAM	20175	1RB#2	22.09	
Band4	1.4MHz	QPSK	20175	1RB#5	23.20	
Band4	1.4MHz	16QAM	20175	1RB#5	22.12	
Band4	1.4MHz	QPSK	20175	3RB#0	22.32	
Band4	1.4MHz	16QAM	20175	3RB#0	22.14	
Band4	1.4MHz	QPSK	20175	3RB#1	22.65	
Band4	1.4MHz	16QAM	20175	3RB#1	22.15	
Band4	1.4MHz	QPSK	20175	3RB#3	22.29	
Band4	1.4MHz	16QAM	20175	3RB#3	22.49	
Band4	1.4MHz	QPSK	20175	6RB#0	22.22	
Band4	1.4MHz	16QAM	20175	6RB#0	21.17	
Band4	1.4MHz	QPSK	20393	1RB#0	22.50	
Band4	1.4MHz	16QAM	20393	1RB#0	21.30	
Band4	1.4MHz	QPSK	20393	1RB#2	22.50	
Band4	1.4MHz	16QAM	20393	1RB#2	21.35	
Band4	1.4MHz	QPSK	20393	1RB#5	22.54	
Band4	1.4MHz	16QAM	20393	1RB#5	21.34	
Band4	1.4MHz	QPSK	20393	3RB#0	22.43	
Band4	1.4MHz	16QAM	20393	3RB#0	22.42	
Band4	1.4MHz	QPSK	20393	3RB#1	22.40	
Band4	1.4MHz	16QAM	20393	3RB#1	22.40	
Band4	1.4MHz	QPSK	20393	3RB#3	22.62	
Band4	1.4MHz	16QAM	20393	3RB#3	22.61	
Band4	1.4MHz	QPSK	20393	6RB#0	21.49	
Band4	1.4MHz	16QAM	20393	6RB#0	22.11	
Band4	3MHz	QPSK	19965	1RB#0	21.68	
Band4	3MHz	16QAM	19965	1RB#0	21.94	
Band4	3MHz	QPSK	19965	1RB#8	22.02	

All rights reserved. Unless otherwise specified, no part of this report may be reproduced or utilized in any part, form or by any means, electronic or mechanical, including photocopying and microfilm, without permission in writing from TOWE.

Band4	3MHz	16QAM	19965	1RB#8	22.21	See Tune up Procedure
Band4	3MHz	QPSK	19965	1RB#14	22.30	
Band4	3MHz	16QAM	19965	1RB#14	21.98	
Band4	3MHz	QPSK	19965	8RB#0	22.11	
Band4	3MHz	16QAM	19965	8RB#0	22.25	
Band4	3MHz	QPSK	19965	8RB#4	22.14	
Band4	3MHz	16QAM	19965	8RB#4	22.36	
Band4	3MHz	QPSK	19965	8RB#7	22.56	
Band4	3MHz	16QAM	19965	8RB#7	22.58	
Band4	3MHz	QPSK	19965	15RB#0	22.34	
Band4	3MHz	16QAM	19965	15RB#0	22.09	
Band4	3MHz	QPSK	20175	1RB#0	22.18	
Band4	3MHz	16QAM	20175	1RB#0	22.26	
Band4	3MHz	QPSK	20175	1RB#8	22.32	
Band4	3MHz	16QAM	20175	1RB#8	22.15	
Band4	3MHz	QPSK	20175	1RB#14	23.04	
Band4	3MHz	16QAM	20175	1RB#14	22.16	
Band4	3MHz	QPSK	20175	8RB#0	22.35	
Band4	3MHz	16QAM	20175	8RB#0	22.35	
Band4	3MHz	QPSK	20175	8RB#4	22.35	
Band4	3MHz	16QAM	20175	8RB#4	22.35	
Band4	3MHz	QPSK	20175	8RB#7	22.33	
Band4	3MHz	16QAM	20175	8RB#7	22.33	
Band4	3MHz	QPSK	20175	15RB#0	22.33	
Band4	3MHz	16QAM	20175	15RB#0	21.26	
Band4	3MHz	QPSK	20385	1RB#0	22.51	
Band4	3MHz	16QAM	20385	1RB#0	22.31	
Band4	3MHz	QPSK	20385	1RB#8	22.45	
Band4	3MHz	16QAM	20385	1RB#8	21.47	
Band4	3MHz	QPSK	20385	1RB#14	22.47	
Band4	3MHz	16QAM	20385	1RB#14	21.51	
Band4	3MHz	QPSK	20385	8RB#0	21.62	
Band4	3MHz	16QAM	20385	8RB#0	21.61	
Band4	3MHz	QPSK	20385	8RB#4	21.61	
Band4	3MHz	16QAM	20385	8RB#4	21.61	
Band4	3MHz	QPSK	20385	8RB#7	21.61	
Band4	3MHz	16QAM	20385	8RB#7	21.62	
Band4	3MHz	QPSK	20385	15RB#0	21.61	
Band4	3MHz	16QAM	20385	15RB#0	21.78	
Band4	5MHz	QPSK	19975	1RB#0	22.36	
Band4	5MHz	16QAM	19975	1RB#0	22.51	
Band4	5MHz	QPSK	19975	1RB#12	22.87	
Band4	5MHz	16QAM	19975	1RB#12	22.45	
Band4	5MHz	QPSK	19975	1RB#24	22.69	
Band4	5MHz	16QAM	19975	1RB#24	22.25	
Band4	5MHz	QPSK	19975	12RB#0	22.39	
Band4	5MHz	16QAM	19975	12RB#0	22.17	
Band4	5MHz	QPSK	19975	12RB#6	22.28	
Band4	5MHz	16QAM	19975	12RB#6	22.45	
Band4	5MHz	QPSK	19975	12RB#13	22.32	
Band4	5MHz	16QAM	19975	12RB#13	22.15	
Band4	5MHz	QPSK	19975	25RB#0	22.36	
Band4	5MHz	16QAM	19975	25RB#0	22.18	
Band4	5MHz	QPSK	20175	1RB#0	22.43	
Band4	5MHz	16QAM	20175	1RB#0	22.19	
Band4	5MHz	QPSK	20175	1RB#12	23.18	
Band4	5MHz	16QAM	20175	1RB#12	22.06	
Band4	5MHz	QPSK	20175	1RB#24	22.64	
Band4	5MHz	16QAM	20175	1RB#24	21.78	
Band4	5MHz	QPSK	20175	12RB#0	22.33	

All rights reserved. Unless otherwise specified, no part of this report may be reproduced or utilized in any part, form or by any means, electronic or mechanical, including photocopying and microfilm, without permission in writing from TOWE.

Band4	5MHz	16QAM	20175	12RB#0	22.33	See Tune up Procedure
Band4	5MHz	QPSK	20175	12RB#6	22.32	
Band4	5MHz	16QAM	20175	12RB#6	22.35	
Band4	5MHz	QPSK	20175	12RB#13	22.17	
Band4	5MHz	16QAM	20175	12RB#13	22.18	
Band4	5MHz	QPSK	20175	25RB#0	22.05	
Band4	5MHz	16QAM	20175	25RB#0	20.97	
Band4	5MHz	QPSK	20375	1RB#0	22.38	
Band4	5MHz	16QAM	20375	1RB#0	22.69	
Band4	5MHz	QPSK	20375	1RB#12	22.21	
Band4	5MHz	16QAM	20375	1RB#12	22.74	
Band4	5MHz	QPSK	20375	1RB#24	22.44	
Band4	5MHz	16QAM	20375	1RB#24	21.57	
Band4	5MHz	QPSK	20375	12RB#0	20.92	
Band4	5MHz	16QAM	20375	12RB#0	20.92	
Band4	5MHz	QPSK	20375	12RB#6	20.92	
Band4	5MHz	16QAM	20375	12RB#6	20.93	
Band4	5MHz	QPSK	20375	12RB#13	21.59	
Band4	5MHz	16QAM	20375	12RB#13	21.58	
Band4	5MHz	QPSK	20375	25RB#0	21.06	
Band4	5MHz	16QAM	20375	25RB#0	21.32	
Band4	10MHz	QPSK	20000	1RB#0	22.47	
Band4	10MHz	16QAM	20000	1RB#0	22.36	
Band4	10MHz	QPSK	20000	1RB#24	21.42	
Band4	10MHz	16QAM	20000	1RB#24	21.89	
Band4	10MHz	QPSK	20000	1RB#49	22.00	
Band4	10MHz	16QAM	20000	1RB#49	21.43	
Band4	10MHz	QPSK	20000	25RB#0	21.36	
Band4	10MHz	16QAM	20000	25RB#0	21.84	
Band4	10MHz	QPSK	20000	25RB#13	21.48	
Band4	10MHz	16QAM	20000	25RB#13	21.65	
Band4	10MHz	QPSK	20000	25RB#25	20.96	
Band4	10MHz	16QAM	20000	25RB#25	20.97	
Band4	10MHz	QPSK	20000	50RB#0	21.80	
Band4	10MHz	QPSK	20175	1RB#0	22.74	
Band4	10MHz	16QAM	20175	1RB#0	22.34	
Band4	10MHz	QPSK	20175	1RB#24	22.65	
Band4	10MHz	16QAM	20175	1RB#24	22.21	
Band4	10MHz	QPSK	20175	1RB#49	22.79	
Band4	10MHz	16QAM	20175	1RB#49	22.13	
Band4	10MHz	QPSK	20175	25RB#0	22.33	
Band4	10MHz	16QAM	20175	25RB#0	22.31	
Band4	10MHz	QPSK	20175	25RB#13	22.31	
Band4	10MHz	16QAM	20175	25RB#13	22.30	
Band4	10MHz	QPSK	20175	25RB#25	22.76	
Band4	10MHz	16QAM	20175	25RB#25	22.74	
Band4	10MHz	QPSK	20175	50RB#0	22.09	
Band4	10MHz	QPSK	20350	1RB#0	22.10	
Band4	10MHz	16QAM	20350	1RB#0	22.30	
Band4	10MHz	QPSK	20350	1RB#24	22.01	
Band4	10MHz	16QAM	20350	1RB#24	22.12	
Band4	10MHz	QPSK	20350	1RB#49	22.53	
Band4	10MHz	16QAM	20350	1RB#49	21.62	
Band4	10MHz	QPSK	20350	25RB#0	20.95	
Band4	10MHz	16QAM	20350	25RB#0	20.93	
Band4	10MHz	QPSK	20350	25RB#13	20.91	
Band4	10MHz	16QAM	20350	25RB#13	21.52	
Band4	10MHz	QPSK	20350	25RB#25	21.64	
Band4	10MHz	16QAM	20350	25RB#25	21.63	
Band4	10MHz	QPSK	20350	50RB#0	21.88	

All rights reserved. Unless otherwise specified, no part of this report may be reproduced or utilized in any part, form or by any means, electronic or mechanical, including photocopying and microfilm, without permission in writing from TOWE.

Band4	15MHz	QPSK	20025	1RB#0	21.28	See Tune up Procedure
Band4	15MHz	16QAM	20025	1RB#0	21.36	
Band4	15MHz	QPSK	20025	1RB#38	21.76	
Band4	15MHz	16QAM	20025	1RB#38	21.45	
Band4	15MHz	QPSK	20025	1RB#74	22.80	
Band4	15MHz	16QAM	20025	1RB#74	21.58	
Band4	15MHz	QPSK	20025	38RB#0	21.09	
Band4	15MHz	16QAM	20025	38RB#0	21.06	
Band4	15MHz	QPSK	20025	38RB#18	21.05	
Band4	15MHz	16QAM	20025	38RB#18	21.03	
Band4	15MHz	QPSK	20025	38RB#37	21.03	
Band4	15MHz	16QAM	20025	38RB#37	21.02	
Band4	15MHz	QPSK	20025	75RB#0	21.02	
Band4	15MHz	QPSK	20175	1RB#0	22.68	
Band4	15MHz	16QAM	20175	1RB#0	22.34	
Band4	15MHz	QPSK	20175	1RB#38	22.85	
Band4	15MHz	16QAM	20175	1RB#38	22.35	
Band4	15MHz	QPSK	20175	1RB#74	22.26	
Band4	15MHz	16QAM	20175	1RB#74	21.72	
Band4	15MHz	QPSK	20175	38RB#0	22.02	
Band4	15MHz	16QAM	20175	38RB#0	21.99	
Band4	15MHz	QPSK	20175	38RB#18	21.96	
Band4	15MHz	16QAM	20175	38RB#18	21.94	
Band4	15MHz	QPSK	20175	38RB#37	21.92	
Band4	15MHz	16QAM	20175	38RB#37	21.90	
Band4	15MHz	QPSK	20175	75RB#0	21.90	
Band4	15MHz	QPSK	20325	1RB#0	22.35	
Band4	15MHz	16QAM	20325	1RB#0	22.03	
Band4	15MHz	QPSK	20325	1RB#38	22.03	
Band4	15MHz	16QAM	20325	1RB#38	22.69	
Band4	15MHz	QPSK	20325	1RB#74	22.40	
Band4	15MHz	16QAM	20325	1RB#74	21.87	
Band4	15MHz	QPSK	20325	38RB#0	21.03	
Band4	15MHz	16QAM	20325	38RB#0	21.01	
Band4	15MHz	QPSK	20325	38RB#18	20.99	
Band4	15MHz	16QAM	20325	38RB#18	20.97	
Band4	15MHz	QPSK	20325	38RB#37	20.97	
Band4	15MHz	16QAM	20325	38RB#37	20.97	
Band4	15MHz	QPSK	20325	75RB#0	20.95	
Band4	20MHz	QPSK	20050	1RB#0	21.89	
Band4	20MHz	16QAM	20050	1RB#0	22.36	
Band4	20MHz	QPSK	20050	1RB#49	22.86	
Band4	20MHz	16QAM	20050	1RB#49	22.08	
Band4	20MHz	QPSK	20050	1RB#99	22.47	
Band4	20MHz	16QAM	20050	1RB#99	22.38	
Band4	20MHz	QPSK	20050	50RB#0	22.12	
Band4	20MHz	16QAM	20050	50RB#0	22.37	
Band4	20MHz	QPSK	20050	50RB#25	22.33	
Band4	20MHz	16QAM	20050	50RB#25	22.14	
Band4	20MHz	QPSK	20050	50RB#50	22.19	
Band4	20MHz	16QAM	20050	50RB#50	22.21	
Band4	20MHz	QPSK	20175	1RB#0	22.65	
Band4	20MHz	16QAM	20175	1RB#0	22.19	
Band4	20MHz	QPSK	20175	1RB#49	22.84	
Band4	20MHz	16QAM	20175	1RB#49	22.46	
Band4	20MHz	QPSK	20175	1RB#99	22.71	
Band4	20MHz	QPSK	20050	100RB#0	21.57	
Band4	20MHz	16QAM	20175	1RB#99	21.95	
Band4	20MHz	QPSK	20175	50RB#0	22.32	
Band4	20MHz	16QAM	20175	50RB#0	22.41	

All rights reserved. Unless otherwise specified, no part of this report may be reproduced or utilized in any part, form or by any means, electronic or mechanical, including photocopying and microfilm, without permission in writing from TOWE.

Band4	20MHz	QPSK	20175	50RB#25	22.39	See Tune up Procedure
Band4	20MHz	16QAM	20175	50RB#25	22.37	
Band4	20MHz	QPSK	20175	50RB#50	22.30	
Band4	20MHz	16QAM	20175	50RB#50	22.29	
Band4	20MHz	QPSK	20300	1RB#0	23.10	
Band4	20MHz	QPSK	20175	100RB#0	22.63	
Band4	20MHz	16QAM	20300	1RB#0	22.99	
Band4	20MHz	QPSK	20300	1RB#49	22.67	
Band4	20MHz	16QAM	20300	1RB#49	21.43	
Band4	20MHz	QPSK	20300	1RB#99	22.82	
Band4	20MHz	16QAM	20300	1RB#99	22.06	
Band4	20MHz	QPSK	20300	50RB#0	21.94	
Band4	20MHz	16QAM	20300	50RB#0	21.92	
Band4	20MHz	QPSK	20300	50RB#25	21.89	
Band4	20MHz	16QAM	20300	50RB#25	21.87	
Band4	20MHz	QPSK	20300	50RB#50	21.71	
Band4	20MHz	16QAM	20300	50RB#50	21.69	
Band4	20MHz	QPSK	20300	100RB#0	22.28	

Band	Bandwidth	Modulation	Channel	RB Configuration	Result(dBm)	Tune up(dBm)
Band66	1.4MHz	QPSK	132665	1RB#0	22.87	See Tune up Procedure
Band66	1.4MHz	16QAM	132665	1RB#0	22.68	
Band66	1.4MHz	QPSK	132665	1RB#2	22.44	
Band66	1.4MHz	16QAM	132665	1RB#2	22.47	
Band66	1.4MHz	QPSK	132665	1RB#5	22.21	
Band66	1.4MHz	16QAM	132665	1RB#5	22.19	
Band66	1.4MHz	QPSK	132665	3RB#0	22.22	
Band66	1.4MHz	16QAM	132665	3RB#0	22.99	
Band66	1.4MHz	QPSK	132665	3RB#1	22.97	
Band66	1.4MHz	16QAM	132665	3RB#1	22.96	
Band66	1.4MHz	QPSK	132665	3RB#3	22.94	
Band66	1.4MHz	16QAM	132665	3RB#3	22.98	
Band66	1.4MHz	QPSK	132665	6RB#0	22.08	
Band66	1.4MHz	16QAM	132665	6RB#0	21.23	
Band66	3MHz	QPSK	132657	1RB#0	22.33	
Band66	3MHz	16QAM	132657	1RB#0	22.40	
Band66	3MHz	QPSK	132657	1RB#8	22.99	
Band66	3MHz	16QAM	132657	1RB#8	22.31	
Band66	3MHz	QPSK	132657	1RB#14	22.66	
Band66	3MHz	16QAM	132657	1RB#14	21.92	
Band66	3MHz	QPSK	132657	8RB#0	22.31	
Band66	3MHz	16QAM	132657	8RB#0	22.31	
Band66	3MHz	QPSK	132657	8RB#4	22.31	
Band66	3MHz	16QAM	132657	8RB#4	22.33	
Band66	3MHz	QPSK	132657	8RB#7	22.33	
Band66	3MHz	16QAM	132657	8RB#7	22.33	
Band66	3MHz	QPSK	132657	15RB#0	22.33	
Band66	3MHz	16QAM	132657	15RB#0	21.45	
Band66	5MHz	QPSK	132647	1RB#0	22.66	
Band66	5MHz	16QAM	132647	1RB#0	22.56	
Band66	5MHz	QPSK	132647	1RB#12	22.49	
Band66	5MHz	16QAM	132647	1RB#12	22.37	
Band66	5MHz	QPSK	132647	1RB#24	22.77	
Band66	5MHz	16QAM	132647	1RB#24	21.88	
Band66	5MHz	QPSK	132647	12RB#0	22.52	
Band66	5MHz	16QAM	132647	12RB#0	22.51	
Band66	5MHz	QPSK	132647	12RB#6	22.50	
Band66	5MHz	16QAM	132647	12RB#6	22.49	
Band66	5MHz	QPSK	132647	12RB#13	22.23	

All rights reserved. Unless otherwise specified, no part of this report may be reproduced or utilized in any part, form or by any means, electronic or mechanical, including photocopying and microfilm, without permission in writing from TOWE.

Band66	5MHz	16QAM	132647	12RB#13	22.24	See Tune up Procedure
Band66	5MHz	QPSK	132647	25RB#0	22.43	
Band66	5MHz	16QAM	132647	25RB#0	21.53	
Band66	10MHz	QPSK	132622	1RB#0	22.14	
Band66	10MHz	16QAM	132622	1RB#0	22.23	
Band66	10MHz	QPSK	132622	1RB#24	22.33	
Band66	10MHz	16QAM	132622	1RB#24	22.37	
Band66	10MHz	QPSK	132622	1RB#49	22.96	
Band66	10MHz	16QAM	132622	1RB#49	22.23	
Band66	10MHz	QPSK	132622	25RB#0	22.03	
Band66	10MHz	16QAM	132622	25RB#0	22.03	
Band66	10MHz	QPSK	132622	25RB#13	22.08	
Band66	10MHz	16QAM	132622	25RB#13	22.07	
Band66	10MHz	QPSK	132622	25RB#25	22.79	
Band66	10MHz	16QAM	132622	25RB#25	22.78	
Band66	10MHz	QPSK	132622	50RB#0	22.27	
Band66	15MHz	QPSK	132597	1RB#0	21.24	
Band66	15MHz	16QAM	132597	1RB#0	21.68	
Band66	15MHz	QPSK	132597	1RB#38	22.85	
Band66	15MHz	16QAM	132597	1RB#38	21.98	
Band66	15MHz	QPSK	132597	1RB#74	22.02	
Band66	15MHz	16QAM	132597	1RB#74	22.16	
Band66	15MHz	QPSK	132597	38RB#0	21.75	
Band66	15MHz	16QAM	132597	38RB#0	21.75	
Band66	15MHz	QPSK	132597	38RB#18	21.77	
Band66	15MHz	16QAM	132597	38RB#18	21.77	
Band66	15MHz	QPSK	132597	38RB#37	21.76	
Band66	15MHz	16QAM	132597	38RB#37	21.76	
Band66	15MHz	QPSK	132597	75RB#0	21.76	
Band66	20MHz	QPSK	132572	1RB#0	21.76	
Band66	20MHz	16QAM	132572	1RB#0	22.00	
Band66	20MHz	QPSK	132572	1RB#49	22.19	
Band66	20MHz	16QAM	132572	1RB#49	22.59	
Band66	20MHz	QPSK	132572	1RB#99	**22.51**	
Band66	20MHz	16QAM	132572	1RB#99	22.29	
Band66	20MHz	QPSK	132572	50RB#0	**22.45**	
Band66	20MHz	16QAM	132572	50RB#0	22.49	
Band66	20MHz	QPSK	132572	50RB#25	22.21	
Band66	20MHz	16QAM	132572	50RB#25	22.32	
Band66	20MHz	QPSK	132572	50RB#50	22.14	
Band66	20MHz	16QAM	132572	50RB#50	22.13	
Band66	20MHz	QPSK	132572	100RB#0	21.18	
Band66	1.4MHz	QPSK	131979	1RB#0	21.36	
Band66	1.4MHz	16QAM	131979	1RB#0	21.78	
Band66	1.4MHz	QPSK	131979	1RB#2	22.06	
Band66	1.4MHz	16QAM	131979	1RB#2	21.36	
Band66	1.4MHz	QPSK	131979	1RB#5	21.59	
Band66	1.4MHz	16QAM	131979	1RB#5	21.56	
Band66	1.4MHz	QPSK	131979	3RB#0	21.58	
Band66	1.4MHz	16QAM	131979	3RB#0	21.49	
Band66	1.4MHz	QPSK	131979	3RB#1	21.43	
Band66	1.4MHz	16QAM	131979	3RB#1	21.39	
Band66	1.4MHz	QPSK	131979	3RB#3	21.57	
Band66	1.4MHz	16QAM	131979	3RB#3	21.52	
Band66	1.4MHz	QPSK	131979	6RB#0	21.66	
Band66	1.4MHz	16QAM	131979	6RB#0	21.74	
Band66	1.4MHz	QPSK	132322	1RB#0	21.92	
Band66	1.4MHz	16QAM	132322	1RB#0	21.35	
Band66	1.4MHz	QPSK	132322	1RB#2	21.79	
Band66	1.4MHz	16QAM	132322	1RB#2	21.56	

All rights reserved. Unless otherwise specified, no part of this report may be reproduced or utilized in any part, form or by any means, electronic or mechanical, including photocopying and microfilm, without permission in writing from TOWE.

Band66	1.4MHz	QPSK	132322	1RB#5	21.77	See Tune up Procedure
Band66	1.4MHz	16QAM	132322	1RB#5	21.57	
Band66	1.4MHz	QPSK	132322	3RB#0	21.86	
Band66	1.4MHz	16QAM	132322	3RB#0	21.84	
Band66	1.4MHz	QPSK	132322	3RB#1	21.82	
Band66	1.4MHz	16QAM	132322	3RB#1	21.92	
Band66	1.4MHz	QPSK	132322	3RB#3	21.99	
Band66	1.4MHz	16QAM	132322	3RB#3	21.97	
Band66	1.4MHz	QPSK	132322	6RB#0	20.96	
Band66	1.4MHz	16QAM	132322	6RB#0	21.90	
Band66	3MHz	QPSK	131987	1RB#0	21.40	
Band66	3MHz	16QAM	131987	1RB#0	22.36	
Band66	3MHz	QPSK	131987	1RB#8	22.02	
Band66	3MHz	16QAM	131987	1RB#8	22.64	
Band66	3MHz	QPSK	131987	1RB#14	22.11	
Band66	3MHz	16QAM	131987	1RB#14	22.52	
Band66	3MHz	QPSK	131987	8RB#0	22.25	
Band66	3MHz	16QAM	131987	8RB#0	22.36	
Band66	3MHz	QPSK	131987	8RB#4	21.68	
Band66	3MHz	16QAM	131987	8RB#4	21.89	
Band66	3MHz	QPSK	131987	8RB#7	22.00	
Band66	3MHz	16QAM	131987	8RB#7	22.25	
Band66	3MHz	QPSK	131987	15RB#0	22.30	
Band66	3MHz	16QAM	131987	15RB#0	22.14	
Band66	3MHz	QPSK	132322	1RB#0	21.65	
Band66	3MHz	16QAM	132322	1RB#0	21.59	
Band66	3MHz	QPSK	132322	1RB#8	21.53	
Band66	3MHz	16QAM	132322	1RB#8	21.76	
Band66	3MHz	QPSK	132322	1RB#14	21.39	
Band66	3MHz	16QAM	132322	1RB#14	21.80	
Band66	3MHz	QPSK	132322	8RB#0	21.36	
Band66	3MHz	16QAM	132322	8RB#0	21.25	
Band66	3MHz	QPSK	132322	8RB#4	21.14	
Band66	3MHz	16QAM	132322	8RB#4	21.43	
Band66	3MHz	QPSK	132322	8RB#7	21.25	
Band66	3MHz	16QAM	132322	8RB#7	21.22	
Band66	3MHz	QPSK	132322	15RB#0	21.36	
Band66	3MHz	16QAM	132322	15RB#0	21.20	
Band66	5MHz	QPSK	131997	1RB#0	21.38	
Band66	5MHz	16QAM	131997	1RB#0	21.45	
Band66	5MHz	QPSK	131997	1RB#12	21.36	
Band66	5MHz	16QAM	131997	1RB#12	21.69	
Band66	5MHz	QPSK	131997	1RB#24	21.32	
Band66	5MHz	16QAM	131997	1RB#24	21.74	
Band66	5MHz	QPSK	131997	12RB#0	21.21	
Band66	5MHz	16QAM	131997	12RB#0	21.30	
Band66	5MHz	QPSK	131997	12RB#6	21.25	
Band66	5MHz	16QAM	131997	12RB#6	21.62	
Band66	5MHz	QPSK	131997	12RB#13	21.30	
Band66	5MHz	16QAM	131997	12RB#13	21.14	
Band66	5MHz	QPSK	131997	25RB#0	21.41	
Band66	5MHz	16QAM	131997	25RB#0	21.26	
Band66	5MHz	QPSK	132322	1RB#0	21.69	
Band66	5MHz	16QAM	132322	1RB#0	21.60	
Band66	5MHz	QPSK	132322	1RB#12	21.78	
Band66	5MHz	16QAM	132322	1RB#12	22.00	
Band66	5MHz	QPSK	132322	1RB#24	21.89	
Band66	5MHz	16QAM	132322	1RB#24	22.02	
Band66	5MHz	QPSK	132322	12RB#0	21.36	
Band66	5MHz	16QAM	132322	12RB#0	21.69	

All rights reserved. Unless otherwise specified, no part of this report may be reproduced or utilized in any part, form or by any means, electronic or mechanical, including photocopying and microfilm, without permission in writing from TOWE.

Band66	5MHz	QPSK	132322	12RB#6	21.58	See Tune up Procedure
Band66	5MHz	16QAM	132322	12RB#6	21.77	
Band66	5MHz	QPSK	132322	12RB#13	21.23	
Band66	5MHz	16QAM	132322	12RB#13	22.12	
Band66	5MHz	QPSK	132322	25RB#0	22.35	
Band66	5MHz	16QAM	132322	25RB#0	22.12	
Band66	10MHz	QPSK	131022	1RB#0	21.98	
Band66	10MHz	16QAM	131022	1RB#0	22.52	
Band66	10MHz	QPSK	131022	1RB#24	21.75	
Band66	10MHz	16QAM	131022	1RB#24	22.34	
Band66	10MHz	QPSK	131022	1RB#49	22.32	
Band66	10MHz	16QAM	131022	1RB#49	22.36	
Band66	10MHz	QPSK	131022	25RB#0	21.85	
Band66	10MHz	16QAM	131022	25RB#0	21.79	
Band66	10MHz	QPSK	131022	25RB#13	21.67	
Band66	10MHz	16QAM	131022	25RB#13	21.59	
Band66	10MHz	QPSK	131022	25RB#25	20.98	
Band66	10MHz	16QAM	131022	25RB#25	20.94	
Band66	10MHz	QPSK	132322	1RB#0	22.17	
Band66	10MHz	16QAM	132322	1RB#0	21.22	
Band66	10MHz	QPSK	132322	1RB#24	22.07	
Band66	10MHz	16QAM	132322	1RB#24	22.00	
Band66	10MHz	QPSK	132322	1RB#49	21.50	
Band66	10MHz	16QAM	132322	1RB#49	21.96	
Band66	10MHz	QPSK	132322	25RB#0	21.01	
Band66	10MHz	16QAM	132322	25RB#0	21.01	
Band66	10MHz	QPSK	132322	25RB#13	21.00	
Band66	10MHz	16QAM	132322	25RB#13	21.00	
Band66	10MHz	QPSK	132322	25RB#25	21.18	
Band66	10MHz	16QAM	132322	25RB#25	21.17	
Band66	10MHz	QPSK	131022	50RB#0	22.16	
Band66	10MHz	QPSK	132322	50RB#0	21.02	
Band66	15MHz	QPSK	131047	1RB#0	21.30	
Band66	15MHz	16QAM	131047	1RB#0	22.36	
Band66	15MHz	QPSK	131047	1RB#38	21.78	
Band66	15MHz	16QAM	131047	1RB#38	22.54	
Band66	15MHz	QPSK	131047	1RB#74	22.55	
Band66	15MHz	16QAM	131047	1RB#74	21.58	
Band66	15MHz	QPSK	131047	38RB#0	22.65	
Band66	15MHz	16QAM	131047	38RB#0	22.59	
Band66	15MHz	QPSK	131047	38RB#18	22.46	
Band66	15MHz	16QAM	131047	38RB#18	22.30	
Band66	15MHz	QPSK	131047	38RB#37	22.25	
Band66	15MHz	16QAM	131047	38RB#37	22.48	
Band66	15MHz	QPSK	132322	1RB#0	22.48	
Band66	15MHz	16QAM	132322	1RB#0	21.60	
Band66	15MHz	QPSK	132322	1RB#38	21.51	
Band66	15MHz	16QAM	132322	1RB#38	22.36	
Band66	15MHz	QPSK	132322	1RB#74	21.31	
Band66	15MHz	16QAM	132322	1RB#74	22.95	
Band66	15MHz	QPSK	132322	38RB#0	20.92	
Band66	15MHz	16QAM	132322	38RB#0	20.91	
Band66	15MHz	QPSK	132322	38RB#18	20.93	
Band66	15MHz	16QAM	132322	38RB#18	20.93	
Band66	15MHz	QPSK	132322	38RB#37	20.94	
Band66	15MHz	16QAM	132322	38RB#37	20.95	
Band66	15MHz	QPSK	131047	75RB#0	21.04	
Band66	15MHz	QPSK	132322	75RB#0	21.21	
Band66	20MHz	QPSK	132072	1RB#0	21.75	
Band66	20MHz	16QAM	132072	1RB#0	22.36	

All rights reserved. Unless otherwise specified, no part of this report may be reproduced or utilized in any part, form or by any means, electronic or mechanical, including photocopying and microfilm, without permission in writing from TOWE.

Band66	20MHz	QPSK	132072	1RB#49	21.55	See Tune up Procedure
Band66	20MHz	16QAM	132072	1RB#49	21.44	
Band66	20MHz	QPSK	132072	1RB#99	22.25	
Band66	20MHz	16QAM	132072	1RB#99	22.16	
Band66	20MHz	QPSK	132072	50RB#0	22.35	
Band66	20MHz	16QAM	132072	50RB#0	22.15	
Band66	20MHz	QPSK	132072	50RB#25	22.24	
Band66	20MHz	16QAM	132072	50RB#25	22.00	
Band66	20MHz	QPSK	132072	50RB#50	22.06	
Band66	20MHz	16QAM	132072	50RB#50	22.16	
Band66	20MHz	QPSK	132322	1RB#0	22.30	
Band66	20MHz	16QAM	132322	1RB#0	22.40	
Band66	20MHz	QPSK	132322	1RB#49	22.30	
Band66	20MHz	16QAM	132322	1RB#49	21.83	
Band66	20MHz	QPSK	132322	1RB#99	22.46	
Band66	20MHz	16QAM	132322	1RB#99	22.01	
Band66	20MHz	QPSK	132322	50RB#0	21.77	
Band66	20MHz	16QAM	132322	50RB#0	21.78	
Band66	20MHz	QPSK	132322	50RB#25	21.79	
Band66	20MHz	16QAM	132322	50RB#25	21.80	
Band66	20MHz	QPSK	132322	50RB#50	21.66	
Band66	20MHz	16QAM	132322	50RB#50	21.64	
Band66	20MHz	QPSK	132072	100RB#0	21.38	
Band66	20MHz	QPSK	132322	100RB#0	22.13	

Band	Bandwidth	Modulation	Channel	RB Configuration	Result(dBm)	Tune up(dBm)
Band5	1.4MHz	QPSK	20407	1RB#0	24.04	See Tune up Procedure
Band5	1.4MHz	16QAM	20407	1RB#0	22.74	
Band5	1.4MHz	QPSK	20407	1RB#2	24.24	
Band5	1.4MHz	16QAM	20407	1RB#2	22.93	
Band5	1.4MHz	QPSK	20407	1RB#5	24.11	
Band5	1.4MHz	16QAM	20407	1RB#5	22.79	
Band5	1.4MHz	QPSK	20407	3RB#0	23.96	
Band5	1.4MHz	16QAM	20407	3RB#0	23.91	
Band5	1.4MHz	QPSK	20407	3RB#1	23.89	
Band5	1.4MHz	16QAM	20407	3RB#1	23.87	
Band5	1.4MHz	QPSK	20407	3RB#3	24.19	
Band5	1.4MHz	16QAM	20407	3RB#3	24.17	
Band5	1.4MHz	QPSK	20407	6RB#0	22.98	
Band5	1.4MHz	16QAM	20407	6RB#0	22.67	
Band5	1.4MHz	QPSK	20525	1RB#0	24.45	
Band5	1.4MHz	16QAM	20525	1RB#0	23.33	
Band5	1.4MHz	QPSK	20525	1RB#2	24.33	
Band5	1.4MHz	16QAM	20525	1RB#2	23.27	
Band5	1.4MHz	QPSK	20525	1RB#5	24.31	
Band5	1.4MHz	16QAM	20525	1RB#5	23.25	
Band5	1.4MHz	QPSK	20525	3RB#0	24.46	
Band5	1.4MHz	16QAM	20525	3RB#0	24.44	
Band5	1.4MHz	QPSK	20525	3RB#1	24.44	
Band5	1.4MHz	16QAM	20525	3RB#1	24.44	
Band5	1.4MHz	QPSK	20525	3RB#3	24.46	
Band5	1.4MHz	16QAM	20525	3RB#3	24.44	
Band5	1.4MHz	QPSK	20525	6RB#0	23.40	
Band5	1.4MHz	16QAM	20525	6RB#0	22.41	
Band5	1.4MHz	QPSK	20643	1RB#0	24.41	
Band5	1.4MHz	16QAM	20643	1RB#0	23.15	
Band5	1.4MHz	QPSK	20643	1RB#2	24.00	
Band5	1.4MHz	16QAM	20643	1RB#2	22.81	
Band5	1.4MHz	QPSK	20643	1RB#5	23.87	

All rights reserved. Unless otherwise specified, no part of this report may be reproduced or utilized in any part, form or by any means, electronic or mechanical, including photocopying and microfilm, without permission in writing from TOWE.

Band5	1.4MHz	16QAM	20643	1RB#5	22.65	See Tune up Procedure
Band5	1.4MHz	QPSK	20643	3RB#0	24.16	
Band5	1.4MHz	16QAM	20643	3RB#0	24.13	
Band5	1.4MHz	QPSK	20643	3RB#1	24.13	
Band5	1.4MHz	16QAM	20643	3RB#1	24.11	
Band5	1.4MHz	QPSK	20643	3RB#3	23.99	
Band5	1.4MHz	16QAM	20643	3RB#3	23.95	
Band5	1.4MHz	QPSK	20643	6RB#0	23.12	
Band5	1.4MHz	16QAM	20643	6RB#0	22.05	
Band5	3MHz	QPSK	20415	1RB#0	24.06	
Band5	3MHz	16QAM	20415	1RB#0	23.03	
Band5	3MHz	QPSK	20415	1RB#8	24.06	
Band5	3MHz	16QAM	20415	1RB#8	23.19	
Band5	3MHz	QPSK	20415	1RB#14	24.06	
Band5	3MHz	16QAM	20415	1RB#14	23.11	
Band5	3MHz	QPSK	20415	8RB#0	23.18	
Band5	3MHz	16QAM	20415	8RB#0	23.19	
Band5	3MHz	QPSK	20415	8RB#4	23.18	
Band5	3MHz	16QAM	20415	8RB#4	23.19	
Band5	3MHz	QPSK	20415	8RB#7	23.05	
Band5	3MHz	16QAM	20415	8RB#7	23.05	
Band5	3MHz	QPSK	20415	15RB#0	23.06	
Band5	3MHz	16QAM	20415	15RB#0	22.02	
Band5	3MHz	QPSK	20525	1RB#0	24.51	
Band5	3MHz	16QAM	20525	1RB#0	23.36	
Band5	3MHz	QPSK	20525	1RB#8	24.40	
Band5	3MHz	16QAM	20525	1RB#8	23.28	
Band5	3MHz	QPSK	20525	1RB#14	24.33	
Band5	3MHz	16QAM	20525	1RB#14	23.15	
Band5	3MHz	QPSK	20525	8RB#0	23.53	
Band5	3MHz	16QAM	20525	8RB#0	23.54	
Band5	3MHz	QPSK	20525	8RB#4	23.53	
Band5	3MHz	16QAM	20525	8RB#4	23.55	
Band5	3MHz	QPSK	20525	8RB#7	23.54	
Band5	3MHz	16QAM	20525	8RB#7	23.54	
Band5	3MHz	QPSK	20525	15RB#0	23.53	
Band5	3MHz	16QAM	20525	15RB#0	22.47	
Band5	3MHz	QPSK	20635	1RB#0	24.61	
Band5	3MHz	16QAM	20635	1RB#0	23.28	
Band5	3MHz	QPSK	20635	1RB#8	24.42	
Band5	3MHz	16QAM	20635	1RB#8	23.15	
Band5	3MHz	QPSK	20635	1RB#14	23.99	
Band5	3MHz	16QAM	20635	1RB#14	22.68	
Band5	3MHz	QPSK	20635	8RB#0	23.44	
Band5	3MHz	16QAM	20635	8RB#0	23.45	
Band5	3MHz	QPSK	20635	8RB#4	23.44	
Band5	3MHz	16QAM	20635	8RB#4	23.45	
Band5	3MHz	QPSK	20635	8RB#7	23.46	
Band5	3MHz	16QAM	20635	8RB#7	23.45	
Band5	3MHz	QPSK	20635	15RB#0	23.45	
Band5	3MHz	16QAM	20635	15RB#0	22.39	
Band5	5MHz	QPSK	20425	1RB#0	24.24	
Band5	5MHz	16QAM	20425	1RB#0	23.08	
Band5	5MHz	QPSK	20425	1RB#12	24.21	
Band5	5MHz	16QAM	20425	1RB#12	23.05	
Band5	5MHz	QPSK	20425	1RB#24	24.42	
Band5	5MHz	16QAM	20425	1RB#24	23.21	
Band5	5MHz	QPSK	20425	12RB#0	23.21	
Band5	5MHz	16QAM	20425	12RB#0	23.22	
Band5	5MHz	QPSK	20425	12RB#6	23.21	

All rights reserved. Unless otherwise specified, no part of this report may be reproduced or utilized in any part, form or by any means, electronic or mechanical, including photocopying and microfilm, without permission in writing from TOWE.

Band5	5MHz	16QAM	20425	12RB#6	23.22	See Tune up Procedure
Band5	5MHz	QPSK	20425	12RB#13	23.14	
Band5	5MHz	16QAM	20425	12RB#13	23.12	
Band5	5MHz	QPSK	20425	25RB#0	23.01	
Band5	5MHz	16QAM	20425	25RB#0	22.00	
Band5	5MHz	QPSK	20525	1RB#0	24.51	
Band5	5MHz	16QAM	20525	1RB#0	23.52	
Band5	5MHz	QPSK	20525	1RB#12	24.40	
Band5	5MHz	16QAM	20525	1RB#12	23.48	
Band5	5MHz	QPSK	20525	1RB#24	24.35	
Band5	5MHz	16QAM	20525	1RB#24	23.39	
Band5	5MHz	QPSK	20525	12RB#0	23.60	
Band5	5MHz	16QAM	20525	12RB#0	23.60	
Band5	5MHz	QPSK	20525	12RB#6	23.60	
Band5	5MHz	16QAM	20525	12RB#6	23.61	
Band5	5MHz	QPSK	20525	12RB#13	23.49	
Band5	5MHz	16QAM	20525	12RB#13	23.49	
Band5	5MHz	QPSK	20525	25RB#0	23.49	
Band5	5MHz	16QAM	20525	25RB#0	22.45	
Band5	5MHz	QPSK	20625	1RB#0	24.40	
Band5	5MHz	16QAM	20625	1RB#0	23.16	
Band5	5MHz	QPSK	20625	1RB#12	24.60	
Band5	5MHz	16QAM	20625	1RB#12	23.48	
Band5	5MHz	QPSK	20625	1RB#24	24.14	
Band5	5MHz	16QAM	20625	1RB#24	22.99	
Band5	5MHz	QPSK	20625	12RB#0	23.43	
Band5	5MHz	16QAM	20625	12RB#0	23.34	
Band5	5MHz	QPSK	20625	12RB#6	23.36	
Band5	5MHz	16QAM	20625	12RB#6	23.37	
Band5	5MHz	QPSK	20625	12RB#13	23.56	
Band5	5MHz	16QAM	20625	12RB#13	23.52	
Band5	5MHz	QPSK	20625	25RB#0	23.47	
Band5	5MHz	16QAM	20625	25RB#0	22.48	
Band5	10MHz	QPSK	20450	1RB#0	24.04	
Band5	10MHz	16QAM	20450	1RB#0	22.92	
Band5	10MHz	QPSK	20450	1RB#24	24.19	
Band5	10MHz	16QAM	20450	1RB#24	23.09	
Band5	10MHz	QPSK	20450	1RB#49	24.40	
Band5	10MHz	16QAM	20450	1RB#49	23.61	
Band5	10MHz	QPSK	20450	25RB#0	23.11	
Band5	10MHz	16QAM	20450	25RB#0	23.06	
Band5	10MHz	QPSK	20450	25RB#13	23.18	
Band5	10MHz	16QAM	20450	25RB#13	23.19	
Band5	10MHz	QPSK	20450	25RB#25	23.45	
Band5	10MHz	16QAM	20450	25RB#25	23.46	
Band5	10MHz	QPSK	20450	50RB#0	23.33	
Band5	10MHz	QPSK	20525	1RB#0	24.65	
Band5	10MHz	16QAM	20525	1RB#0	23.38	
Band5	10MHz	QPSK	20525	1RB#24	24.43	
Band5	10MHz	16QAM	20525	1RB#24	23.49	
Band5	10MHz	QPSK	20525	1RB#49	24.23	
Band5	10MHz	16QAM	20525	1RB#49	23.19	
Band5	10MHz	QPSK	20525	25RB#0	23.60	
Band5	10MHz	16QAM	20525	25RB#0	23.58	
Band5	10MHz	QPSK	20525	25RB#13	23.58	
Band5	10MHz	16QAM	20525	25RB#13	23.57	
Band5	10MHz	QPSK	20525	25RB#25	23.42	
Band5	10MHz	16QAM	20525	25RB#25	23.41	
Band5	10MHz	QPSK	20525	50RB#0	23.49	
Band5	10MHz	QPSK	20600	1RB#0	24.35	

All rights reserved. Unless otherwise specified, no part of this report may be reproduced or utilized in any part, form or by any means, electronic or mechanical, including photocopying and microfilm, without permission in writing from TOWE.

Band5	10MHz	16QAM	20600	1RB#0	23.02	See Tune up Procedure
Band5	10MHz	QPSK	20600	1RB#24	24.08	
Band5	10MHz	16QAM	20600	1RB#24	22.73	
Band5	10MHz	QPSK	20600	1RB#49	24.28	
Band5	10MHz	16QAM	20600	1RB#49	23.10	
Band5	10MHz	QPSK	20600	25RB#0	23.13	
Band5	10MHz	16QAM	20600	25RB#0	23.15	
Band5	10MHz	QPSK	20600	25RB#13	23.14	
Band5	10MHz	16QAM	20600	25RB#13	23.13	
Band5	10MHz	QPSK	20600	25RB#25	23.86	
Band5	10MHz	16QAM	20600	25RB#25	23.83	
Band5	10MHz	QPSK	20600	50RB#0	22.96	

Band	Bandwidth	Modulation	Channel	RB Configuration	Result(dBm)	Tune up(dBm)
Band26	1.4MHz	QPSK	26697	1RB#0	24.64	See Tune up Procedure
Band26	1.4MHz	16QAM	26697	1RB#0	23.48	
Band26	1.4MHz	QPSK	26697	1RB#2	24.74	
Band26	1.4MHz	16QAM	26697	1RB#2	23.63	
Band26	1.4MHz	QPSK	26697	1RB#5	24.64	
Band26	1.4MHz	16QAM	26697	1RB#5	23.52	
Band26	1.4MHz	QPSK	26697	3RB#0	24.63	
Band26	1.4MHz	16QAM	26697	3RB#0	24.72	
Band26	1.4MHz	QPSK	26697	3RB#1	24.70	
Band26	1.4MHz	16QAM	26697	3RB#1	24.68	
Band26	1.4MHz	QPSK	26697	3RB#3	24.95	
Band26	1.4MHz	16QAM	26697	3RB#3	24.93	
Band26	1.4MHz	QPSK	26697	6RB#0	23.78	
Band26	1.4MHz	16QAM	26697	6RB#0	22.80	
Band26	1.4MHz	QPSK	26865	1RB#0	25.20	
Band26	1.4MHz	16QAM	26865	1RB#0	24.13	
Band26	1.4MHz	QPSK	26865	1RB#2	24.89	
Band26	1.4MHz	16QAM	26865	1RB#2	23.90	
Band26	1.4MHz	QPSK	26865	1RB#5	24.86	
Band26	1.4MHz	16QAM	26865	1RB#5	23.86	
Band26	1.4MHz	QPSK	26865	3RB#0	25.16	
Band26	1.4MHz	16QAM	26865	3RB#0	25.14	
Band26	1.4MHz	QPSK	26865	3RB#1	25.11	
Band26	1.4MHz	16QAM	26865	3RB#1	25.12	
Band26	1.4MHz	QPSK	26865	3RB#3	24.96	
Band26	1.4MHz	16QAM	26865	3RB#3	24.91	
Band26	1.4MHz	QPSK	26865	6RB#0	24.09	
Band26	1.4MHz	16QAM	26865	6RB#0	23.10	
Band26	1.4MHz	QPSK	27033	1RB#0	25.11	
Band26	1.4MHz	16QAM	27033	1RB#0	23.89	
Band26	1.4MHz	QPSK	27033	1RB#2	24.70	
Band26	1.4MHz	16QAM	27033	1RB#2	23.51	
Band26	1.4MHz	QPSK	27033	1RB#5	24.46	
Band26	1.4MHz	16QAM	27033	1RB#5	23.23	
Band26	1.4MHz	QPSK	27033	3RB#0	24.83	
Band26	1.4MHz	16QAM	27033	3RB#0	24.91	
Band26	1.4MHz	QPSK	27033	3RB#1	24.91	
Band26	1.4MHz	16QAM	27033	3RB#1	24.89	
Band26	1.4MHz	QPSK	27033	3RB#3	24.61	
Band26	1.4MHz	16QAM	27033	3RB#3	24.55	
Band26	1.4MHz	QPSK	27033	6RB#0	23.88	
Band26	1.4MHz	16QAM	27033	6RB#0	22.84	
Band26	3MHz	QPSK	26705	1RB#0	24.92	
Band26	3MHz	16QAM	26705	1RB#0	23.80	
Band26	3MHz	QPSK	26705	1RB#8	24.75	

All rights reserved. Unless otherwise specified, no part of this report may be reproduced or utilized in any part, form or by any means, electronic or mechanical, including photocopying and microfilm, without permission in writing from TOWE.

Band26	3MHz	16QAM	26705	1RB#8	23.75	See Tune up Procedure
Band26	3MHz	QPSK	26705	1RB#14	24.77	
Band26	3MHz	16QAM	26705	1RB#14	23.82	
Band26	3MHz	QPSK	26705	8RB#0	23.77	
Band26	3MHz	16QAM	26705	8RB#0	23.75	
Band26	3MHz	QPSK	26705	8RB#4	23.77	
Band26	3MHz	16QAM	26705	8RB#4	23.75	
Band26	3MHz	QPSK	26705	8RB#7	23.75	
Band26	3MHz	16QAM	26705	8RB#7	23.74	
Band26	3MHz	QPSK	26705	15RB#0	23.74	
Band26	3MHz	16QAM	26705	15RB#0	22.71	
Band26	3MHz	QPSK	26865	1RB#0	25.33	
Band26	3MHz	16QAM	26865	1RB#0	24.18	
Band26	3MHz	QPSK	26865	1RB#8	24.90	
Band26	3MHz	16QAM	26865	1RB#8	23.77	
Band26	3MHz	QPSK	26865	1RB#14	24.69	
Band26	3MHz	16QAM	26865	1RB#14	23.51	
Band26	3MHz	QPSK	26865	8RB#0	23.98	
Band26	3MHz	16QAM	26865	8RB#0	23.99	
Band26	3MHz	QPSK	26865	8RB#4	23.99	
Band26	3MHz	16QAM	26865	8RB#4	24.00	
Band26	3MHz	QPSK	26865	8RB#7	23.99	
Band26	3MHz	16QAM	26865	8RB#7	24.00	
Band26	3MHz	QPSK	26865	15RB#0	24.00	
Band26	3MHz	16QAM	26865	15RB#0	22.93	
Band26	3MHz	QPSK	27025	1RB#0	25.59	
Band26	3MHz	16QAM	27025	1RB#0	24.33	
Band26	3MHz	QPSK	27025	1RB#8	24.96	
Band26	3MHz	16QAM	27025	1RB#8	23.85	
Band26	3MHz	QPSK	27025	1RB#14	24.27	
Band26	3MHz	16QAM	27025	1RB#14	24.65	
Band26	3MHz	QPSK	27025	8RB#0	24.25	
Band26	3MHz	16QAM	27025	8RB#0	24.28	
Band26	3MHz	QPSK	27025	8RB#4	24.28	
Band26	3MHz	16QAM	27025	8RB#4	24.28	
Band26	3MHz	QPSK	27025	8RB#7	24.29	
Band26	3MHz	16QAM	27025	8RB#7	24.28	
Band26	3MHz	QPSK	27025	15RB#0	24.29	
Band26	3MHz	16QAM	27025	15RB#0	23.34	
Band26	5MHz	QPSK	26715	1RB#0	24.93	
Band26	5MHz	16QAM	26715	1RB#0	23.77	
Band26	5MHz	QPSK	26715	1RB#12	24.87	
Band26	5MHz	16QAM	26715	1RB#12	23.77	
Band26	5MHz	QPSK	26715	1RB#24	24.77	
Band26	5MHz	16QAM	26715	1RB#24	23.68	
Band26	5MHz	QPSK	26715	12RB#0	23.96	
Band26	5MHz	16QAM	26715	12RB#0	23.93	
Band26	5MHz	QPSK	26715	12RB#6	23.92	
Band26	5MHz	16QAM	26715	12RB#6	23.93	
Band26	5MHz	QPSK	26715	12RB#13	23.85	
Band26	5MHz	16QAM	26715	12RB#13	23.85	
Band26	5MHz	QPSK	26715	25RB#0	23.69	
Band26	5MHz	16QAM	26715	25RB#0	23.56	
Band26	5MHz	QPSK	26865	1RB#0	25.24	
Band26	5MHz	16QAM	26865	1RB#0	24.06	
Band26	5MHz	QPSK	26865	1RB#12	24.98	
Band26	5MHz	16QAM	26865	1RB#12	23.94	
Band26	5MHz	QPSK	26865	1RB#24	24.53	
Band26	5MHz	16QAM	26865	1RB#24	23.47	
Band26	5MHz	QPSK	26865	12RB#0	24.33	

All rights reserved. Unless otherwise specified, no part of this report may be reproduced or utilized in any part, form or by any means, electronic or mechanical, including photocopying and microfilm, without permission in writing from TOWE.

Band26	5MHz	16QAM	26865	12RB#0	24.31	See Tune up Procedure
Band26	5MHz	QPSK	26865	12RB#6	24.32	
Band26	5MHz	16QAM	26865	12RB#6	24.30	
Band26	5MHz	QPSK	26865	12RB#13	23.82	
Band26	5MHz	16QAM	26865	12RB#13	23.84	
Band26	5MHz	QPSK	26865	25RB#0	23.97	
Band26	5MHz	16QAM	26865	25RB#0	22.99	
Band26	5MHz	QPSK	27015	1RB#0	24.94	
Band26	5MHz	16QAM	27015	1RB#0	23.66	
Band26	5MHz	QPSK	27015	1RB#12	25.41	
Band26	5MHz	16QAM	27015	1RB#12	24.52	
Band26	5MHz	QPSK	27015	1RB#24	24.62	
Band26	5MHz	16QAM	27015	1RB#24	23.51	
Band26	5MHz	QPSK	27015	12RB#0	24.09	
Band26	5MHz	16QAM	27015	12RB#0	24.11	
Band26	5MHz	QPSK	27015	12RB#6	24.12	
Band26	5MHz	16QAM	27015	12RB#6	24.13	
Band26	5MHz	QPSK	27015	12RB#13	24.41	
Band26	5MHz	16QAM	27015	12RB#13	24.40	
Band26	5MHz	QPSK	27015	25RB#0	24.38	
Band26	5MHz	16QAM	27015	25RB#0	23.39	
Band26	10MHz	QPSK	26750	1RB#0	24.72	
Band26	10MHz	16QAM	26750	1RB#0	23.62	
Band26	10MHz	QPSK	26750	1RB#24	24.57	
Band26	10MHz	16QAM	26750	1RB#24	23.58	
Band26	10MHz	QPSK	26750	1RB#49	24.36	
Band26	10MHz	16QAM	26750	1RB#49	23.37	
Band26	10MHz	QPSK	26750	25RB#0	23.95	
Band26	10MHz	16QAM	26750	25RB#0	23.96	
Band26	10MHz	QPSK	26750	25RB#13	23.96	
Band26	10MHz	16QAM	26750	25RB#13	23.96	
Band26	10MHz	QPSK	26750	25RB#25	23.82	
Band26	10MHz	16QAM	26750	25RB#25	23.82	
Band26	10MHz	QPSK	26750	50RB#0	23.76	
Band26	10MHz	QPSK	26865	1RB#0	24.83	
Band26	10MHz	16QAM	26865	1RB#0	23.34	
Band26	10MHz	QPSK	26865	1RB#24	24.94	
Band26	10MHz	16QAM	26865	1RB#24	23.81	
Band26	10MHz	QPSK	26865	1RB#49	24.10	
Band26	10MHz	16QAM	26865	1RB#49	24.26	
Band26	10MHz	QPSK	26865	25RB#0	24.32	
Band26	10MHz	16QAM	26865	25RB#0	24.29	
Band26	10MHz	QPSK	26865	25RB#13	24.29	
Band26	10MHz	16QAM	26865	25RB#13	24.26	
Band26	10MHz	QPSK	26865	25RB#25	23.87	
Band26	10MHz	16QAM	26865	25RB#25	23.89	
Band26	10MHz	QPSK	26865	50RB#0	23.86	
Band26	10MHz	QPSK	26990	1RB#0	24.35	
Band26	10MHz	16QAM	26990	1RB#0	24.00	
Band26	10MHz	QPSK	26990	1RB#24	24.61	
Band26	10MHz	16QAM	26990	1RB#24	23.29	
Band26	10MHz	QPSK	26990	1RB#49	24.53	
Band26	10MHz	16QAM	26990	1RB#49	23.37	
Band26	10MHz	QPSK	26990	25RB#0	23.28	
Band26	10MHz	16QAM	26990	25RB#0	23.28	
Band26	10MHz	QPSK	26990	25RB#13	23.28	
Band26	10MHz	16QAM	26990	25RB#13	23.28	
Band26	10MHz	QPSK	26990	25RB#25	24.56	
Band26	10MHz	16QAM	26990	25RB#25	24.54	
Band26	10MHz	QPSK	26990	50RB#0	23.53	

All rights reserved. Unless otherwise specified, no part of this report may be reproduced or utilized in any part, form or by any means, electronic or mechanical, including photocopying and microfilm, without permission in writing from TOWE.

Band26	15MHz	QPSK	26865	1RB#0	24.24	See Tune up Procedure
Band26	15MHz	16QAM	26865	1RB#0	24.15	
Band26	15MHz	QPSK	26865	1RB#38	24.77	
Band26	15MHz	16QAM	26865	1RB#38	23.27	
Band26	15MHz	QPSK	26865	1RB#74	24.55	
Band26	15MHz	16QAM	26865	1RB#74	23.43	
Band26	15MHz	QPSK	26865	38RB#0	23.57	
Band26	15MHz	16QAM	26865	38RB#0	23.52	
Band26	15MHz	QPSK	26865	38RB#18	23.51	
Band26	15MHz	16QAM	26865	38RB#18	23.48	
Band26	15MHz	QPSK	26865	38RB#37	23.61	
Band26	15MHz	16QAM	26865	38RB#37	23.60	
Band26	15MHz	QPSK	26865	75RB#0	23.61	
Band26	15MHz	QPSK	26765	1RB#0	24.32	
Band26	15MHz	16QAM	26765	1RB#0	23.20	
Band26	15MHz	QPSK	26765	1RB#38	24.81	
Band26	15MHz	16QAM	26765	1RB#38	24.01	
Band26	15MHz	QPSK	26765	1RB#74	24.33	
Band26	15MHz	16QAM	26765	1RB#74	23.30	
Band26	15MHz	QPSK	26765	38RB#0	23.53	
Band26	15MHz	16QAM	26765	38RB#0	23.66	
Band26	15MHz	QPSK	26765	38RB#18	23.65	
Band26	15MHz	16QAM	26765	38RB#18	23.63	
Band26	15MHz	QPSK	26765	38RB#37	23.61	
Band26	15MHz	16QAM	26765	38RB#37	23.60	
Band26	15MHz	QPSK	26765	75RB#0	23.60	
Band26	15MHz	QPSK	26965	1RB#0	**25.14**	
Band26	15MHz	16QAM	26965	1RB#0	24.03	
Band26	15MHz	QPSK	26965	1RB#38	24.30	
Band26	15MHz	16QAM	26965	1RB#38	23.28	
Band26	15MHz	QPSK	26965	1RB#74	24.75	
Band26	15MHz	16QAM	26965	1RB#74	23.88	
Band26	15MHz	QPSK	26965	38RB#0	**23.94**	
Band26	15MHz	16QAM	26965	38RB#0	23.93	
Band26	15MHz	QPSK	26965	38RB#18	23.91	
Band26	15MHz	16QAM	26965	38RB#18	23.90	
Band26	15MHz	QPSK	26965	38RB#37	23.90	
Band26	15MHz	16QAM	26965	38RB#37	23.88	
Band26	15MHz	QPSK	26965	75RB#0	23.89	

Band	Bandwidth	Modulation	Channel	RB Configuration	Result(dBm)	Tune up(dBm)
Band7	5MHz	QPSK	20775	1RB#0	22.83	See Tune up Procedure
Band7	5MHz	16QAM	20775	1RB#0	22.11	
Band7	5MHz	QPSK	20775	1RB#12	21.91	
Band7	5MHz	16QAM	20775	1RB#12	21.47	
Band7	5MHz	QPSK	20775	1RB#24	21.79	
Band7	5MHz	16QAM	20775	1RB#24	21.11	
Band7	5MHz	QPSK	20775	12RB#0	21.70	
Band7	5MHz	16QAM	20775	12RB#0	21.68	
Band7	5MHz	QPSK	20775	12RB#6	21.65	
Band7	5MHz	16QAM	20775	12RB#6	21.72	
Band7	5MHz	QPSK	20775	12RB#13	20.91	
Band7	5MHz	16QAM	20775	12RB#13	21.69	
Band7	5MHz	QPSK	20775	25RB#0	21.24	
Band7	5MHz	16QAM	20775	25RB#0	22.54	
Band7	5MHz	QPSK	21100	1RB#0	22.70	
Band7	5MHz	16QAM	21100	1RB#0	22.86	
Band7	5MHz	QPSK	21100	1RB#12	22.18	
Band7	5MHz	16QAM	21100	1RB#12	22.34	

All rights reserved. Unless otherwise specified, no part of this report may be reproduced or utilized in any part, form or by any means, electronic or mechanical, including photocopying and microfilm, without permission in writing from TOWE.

Band7	5MHz	QPSK	21100	1RB#24	22.10	See Tune up Procedure
Band7	5MHz	16QAM	21100	1RB#24	22.24	
Band7	5MHz	QPSK	21100	12RB#0	22.82	
Band7	5MHz	16QAM	21100	12RB#0	22.85	
Band7	5MHz	QPSK	21100	12RB#6	22.75	
Band7	5MHz	16QAM	21100	12RB#6	22.78	
Band7	5MHz	QPSK	21100	12RB#13	22.39	
Band7	5MHz	16QAM	21100	12RB#13	22.39	
Band7	5MHz	QPSK	21100	25RB#0	22.64	
Band7	5MHz	16QAM	21100	25RB#0	21.77	
Band7	5MHz	QPSK	21425	1RB#0	21.94	
Band7	5MHz	16QAM	21425	1RB#0	22.08	
Band7	5MHz	QPSK	21425	1RB#12	21.94	
Band7	5MHz	16QAM	21425	1RB#12	22.04	
Band7	5MHz	QPSK	21425	1RB#24	21.77	
Band7	5MHz	16QAM	21425	1RB#24	22.83	
Band7	5MHz	QPSK	21425	12RB#0	22.30	
Band7	5MHz	16QAM	21425	12RB#0	22.30	
Band7	5MHz	QPSK	21425	12RB#6	22.29	
Band7	5MHz	16QAM	21425	12RB#6	22.28	
Band7	5MHz	QPSK	21425	12RB#13	22.15	
Band7	5MHz	16QAM	21425	12RB#13	22.15	
Band7	5MHz	QPSK	21425	25RB#0	22.21	
Band7	5MHz	16QAM	21425	25RB#0	22.31	
Band7	10MHz	QPSK	20800	1RB#0	22.80	
Band7	10MHz	16QAM	20800	1RB#0	21.76	
Band7	10MHz	QPSK	20800	1RB#24	21.99	
Band7	10MHz	16QAM	20800	1RB#24	21.00	
Band7	10MHz	QPSK	20800	1RB#49	21.06	
Band7	10MHz	16QAM	20800	1RB#49	22.07	
Band7	10MHz	QPSK	20800	25RB#0	21.34	
Band7	10MHz	16QAM	20800	25RB#0	21.32	
Band7	10MHz	QPSK	20800	25RB#13	21.30	
Band7	10MHz	16QAM	20800	25RB#13	21.28	
Band7	10MHz	QPSK	20800	25RB#25	21.24	
Band7	10MHz	16QAM	20800	25RB#25	21.80	
Band7	10MHz	QPSK	20800	50RB#0	21.03	
Band7	10MHz	QPSK	21100	1RB#0	22.13	
Band7	10MHz	16QAM	21100	1RB#0	22.38	
Band7	10MHz	QPSK	21100	1RB#24	22.29	
Band7	10MHz	16QAM	21100	1RB#24	22.61	
Band7	10MHz	QPSK	21100	1RB#49	22.71	
Band7	10MHz	16QAM	21100	1RB#49	21.95	
Band7	10MHz	QPSK	21100	25RB#0	22.10	
Band7	10MHz	16QAM	21100	25RB#0	22.09	
Band7	10MHz	QPSK	21100	25RB#13	22.08	
Band7	10MHz	16QAM	21100	25RB#13	22.09	
Band7	10MHz	QPSK	21100	25RB#25	22.43	
Band7	10MHz	16QAM	21100	25RB#25	22.41	
Band7	10MHz	QPSK	21100	50RB#0	22.81	
Band7	10MHz	QPSK	21400	1RB#0	22.39	
Band7	10MHz	16QAM	21400	1RB#0	22.19	
Band7	10MHz	QPSK	21400	1RB#24	22.92	
Band7	10MHz	16QAM	21400	1RB#24	22.98	
Band7	10MHz	QPSK	21400	1RB#49	22.82	
Band7	10MHz	16QAM	21400	1RB#49	22.77	
Band7	10MHz	QPSK	21400	25RB#0	22.12	
Band7	10MHz	16QAM	21400	25RB#0	22.04	
Band7	10MHz	QPSK	21400	25RB#13	22.02	
Band7	10MHz	16QAM	21400	25RB#13	22.10	

All rights reserved. Unless otherwise specified, no part of this report may be reproduced or utilized in any part, form or by any means, electronic or mechanical, including photocopying and microfilm, without permission in writing from TOWE.

Band7	10MHz	QPSK	21400	25RB#25	22.30	See Tune up Procedure
Band7	10MHz	16QAM	21400	25RB#25	22.31	
Band7	10MHz	QPSK	21400	50RB#0	22.26	
Band7	15MHz	QPSK	20825	1RB#0	22.70	
Band7	15MHz	16QAM	20825	1RB#0	21.73	
Band7	15MHz	QPSK	20825	1RB#38	21.36	
Band7	15MHz	16QAM	20825	1RB#38	22.15	
Band7	15MHz	QPSK	20825	1RB#74	21.32	
Band7	15MHz	16QAM	20825	1RB#74	22.24	
Band7	15MHz	QPSK	20825	38RB#0	22.54	
Band7	15MHz	16QAM	20825	38RB#0	22.32	
Band7	15MHz	QPSK	20825	38RB#18	22.11	
Band7	15MHz	16QAM	20825	38RB#18	22.20	
Band7	15MHz	QPSK	20825	38RB#37	22.25	
Band7	15MHz	16QAM	20825	38RB#37	22.34	
Band7	15MHz	QPSK	20825	75RB#0	22.16	
Band7	15MHz	QPSK	21100	1RB#0	21.95	
Band7	15MHz	16QAM	21100	1RB#0	22.10	
Band7	15MHz	QPSK	21100	1RB#38	22.30	
Band7	15MHz	16QAM	21100	1RB#38	22.70	
Band7	15MHz	QPSK	21100	1RB#74	22.14	
Band7	15MHz	16QAM	21100	1RB#74	21.38	
Band7	15MHz	QPSK	21100	38RB#0	22.65	
Band7	15MHz	16QAM	21100	38RB#0	22.62	
Band7	15MHz	QPSK	21100	38RB#18	22.61	
Band7	15MHz	16QAM	21100	38RB#18	22.69	
Band7	15MHz	QPSK	21100	38RB#37	22.68	
Band7	15MHz	16QAM	21100	38RB#37	22.66	
Band7	15MHz	QPSK	21100	75RB#0	22.66	
Band7	15MHz	QPSK	21375	1RB#0	22.25	
Band7	15MHz	16QAM	21375	1RB#0	21.05	
Band7	15MHz	QPSK	21375	1RB#38	22.77	
Band7	15MHz	16QAM	21375	1RB#38	22.71	
Band7	15MHz	QPSK	21375	1RB#74	22.72	
Band7	15MHz	16QAM	21375	1RB#74	22.76	
Band7	15MHz	QPSK	21375	38RB#0	22.76	
Band7	15MHz	16QAM	21375	38RB#0	22.67	
Band7	15MHz	QPSK	21375	38RB#18	22.74	
Band7	15MHz	16QAM	21375	38RB#18	22.71	
Band7	15MHz	QPSK	21375	38RB#37	22.68	
Band7	15MHz	16QAM	21375	38RB#37	22.76	
Band7	15MHz	QPSK	21375	75RB#0	22.75	
Band7	20MHz	QPSK	20850	1RB#0	22.05	
Band7	20MHz	16QAM	20850	1RB#0	22.00	
Band7	20MHz	QPSK	20850	1RB#49	21.42	
Band7	20MHz	16QAM	20850	1RB#49	22.36	
Band7	20MHz	QPSK	20850	1RB#99	22.63	
Band7	20MHz	16QAM	20850	1RB#99	21.57	
Band7	20MHz	QPSK	20850	50RB#0	20.94	
Band7	20MHz	16QAM	20850	50RB#0	22.24	
Band7	20MHz	QPSK	20850	50RB#25	22.47	
Band7	20MHz	16QAM	20850	50RB#25	22.05	
Band7	20MHz	QPSK	20850	50RB#50	22.61	
Band7	20MHz	16QAM	20850	50RB#50	22.24	
Band7	20MHz	QPSK	20850	100RB#0	22.31	
Band7	20MHz	QPSK	21100	1RB#0	22.09	
Band7	20MHz	16QAM	21100	1RB#0	22.06	
Band7	20MHz	QPSK	21100	1RB#49	22.31	
Band7	20MHz	16QAM	21100	1RB#49	22.48	
Band7	20MHz	QPSK	21100	1RB#99	21.93	

All rights reserved. Unless otherwise specified, no part of this report may be reproduced or utilized in any part, form or by any means, electronic or mechanical, including photocopying and microfilm, without permission in writing from TOWE.

Band7	20MHz	16QAM	21100	1RB#99	22.21	See Tune up Procedure
Band7	20MHz	QPSK	21100	50RB#0	22.23	
Band7	20MHz	16QAM	21100	50RB#0	22.22	
Band7	20MHz	QPSK	21100	50RB#25	22.20	
Band7	20MHz	16QAM	21100	50RB#25	22.20	
Band7	20MHz	QPSK	21100	50RB#50	21.99	
Band7	20MHz	16QAM	21100	50RB#50	21.95	
Band7	20MHz	QPSK	21100	100RB#0	22.68	
Band7	20MHz	QPSK	21350	1RB#0	21.71	
Band7	20MHz	16QAM	21350	1RB#0	21.95	
Band7	20MHz	QPSK	21350	1RB#49	22.54	
Band7	20MHz	16QAM	21350	1RB#49	22.99	
Band7	20MHz	QPSK	21350	1RB#99	**22.97**	
Band7	20MHz	16QAM	21350	1RB#99	22.28	
Band7	20MHz	QPSK	21350	50RB#0	21.24	
Band7	20MHz	16QAM	21350	50RB#0	21.16	
Band7	20MHz	QPSK	21350	50RB#25	21.22	
Band7	20MHz	16QAM	21350	50RB#25	21.15	
Band7	20MHz	QPSK	21350	50RB#50	**22.25**	
Band7	20MHz	16QAM	21350	50RB#50	22.26	
Band7	20MHz	QPSK	21350	100RB#0	22.46	

Band	Bandwidth	Modulation	Channel	RB Configuration	Result(dBm)	Tune up(dBm)
Band12	1.4MHz	QPSK	23017	1RB#0	24.72	See Tune up Procedure
Band12	1.4MHz	16QAM	23017	1RB#0	23.46	
Band12	1.4MHz	QPSK	23017	1RB#2	24.66	
Band12	1.4MHz	16QAM	23017	1RB#2	23.63	
Band12	1.4MHz	QPSK	23017	1RB#5	24.60	
Band12	1.4MHz	16QAM	23017	1RB#5	23.63	
Band12	1.4MHz	QPSK	23017	3RB#0	24.51	
Band12	1.4MHz	16QAM	23017	3RB#0	24.53	
Band12	1.4MHz	QPSK	23017	3RB#1	24.48	
Band12	1.4MHz	16QAM	23017	3RB#1	24.43	
Band12	1.4MHz	QPSK	23017	3RB#3	24.83	
Band12	1.4MHz	16QAM	23017	3RB#3	24.80	
Band12	1.4MHz	QPSK	23017	6RB#0	23.71	
Band12	1.4MHz	16QAM	23017	6RB#0	22.71	
Band12	1.4MHz	QPSK	23095	1RB#0	24.25	
Band12	1.4MHz	16QAM	23095	1RB#0	23.08	
Band12	1.4MHz	QPSK	23095	1RB#2	24.17	
Band12	1.4MHz	16QAM	23095	1RB#2	23.02	
Band12	1.4MHz	QPSK	23095	1RB#5	24.19	
Band12	1.4MHz	16QAM	23095	1RB#5	23.02	
Band12	1.4MHz	QPSK	23095	3RB#0	24.09	
Band12	1.4MHz	16QAM	23095	3RB#0	24.06	
Band12	1.4MHz	QPSK	23095	3RB#1	24.07	
Band12	1.4MHz	16QAM	23095	3RB#1	24.07	
Band12	1.4MHz	QPSK	23095	3RB#3	24.12	
Band12	1.4MHz	16QAM	23095	3RB#3	24.10	
Band12	1.4MHz	QPSK	23095	6RB#0	23.31	
Band12	1.4MHz	16QAM	23095	6RB#0	23.36	
Band12	1.4MHz	QPSK	23173	1RB#0	24.10	
Band12	1.4MHz	16QAM	23173	1RB#0	22.94	
Band12	1.4MHz	QPSK	23173	1RB#2	24.08	
Band12	1.4MHz	16QAM	23173	1RB#2	22.96	
Band12	1.4MHz	QPSK	23173	1RB#5	25.01	
Band12	1.4MHz	16QAM	23173	1RB#5	23.98	
Band12	1.4MHz	QPSK	23173	3RB#0	23.61	
Band12	1.4MHz	16QAM	23173	3RB#0	23.59	

All rights reserved. Unless otherwise specified, no part of this report may be reproduced or utilized in any part, form or by any means, electronic or mechanical, including photocopying and microfilm, without permission in writing from TOWE.

Band12	1.4MHz	QPSK	23173	3RB#1	23.57	See Tune up Procedure
Band12	1.4MHz	16QAM	23173	3RB#1	23.60	
Band12	1.4MHz	QPSK	23173	3RB#3	24.01	
Band12	1.4MHz	16QAM	23173	3RB#3	24.04	
Band12	1.4MHz	QPSK	23173	6RB#0	23.27	
Band12	1.4MHz	16QAM	23173	6RB#0	22.36	
Band12	3MHz	QPSK	23025	1RB#0	24.61	
Band12	3MHz	16QAM	23025	1RB#0	23.63	
Band12	3MHz	QPSK	23025	1RB#8	24.71	
Band12	3MHz	16QAM	23025	1RB#8	23.76	
Band12	3MHz	QPSK	23025	1RB#14	24.57	
Band12	3MHz	16QAM	23025	1RB#14	23.66	
Band12	3MHz	QPSK	23025	8RB#0	23.77	
Band12	3MHz	16QAM	23025	8RB#0	23.74	
Band12	3MHz	QPSK	23025	8RB#4	23.75	
Band12	3MHz	16QAM	23025	8RB#4	23.75	
Band12	3MHz	QPSK	23025	8RB#7	23.75	
Band12	3MHz	16QAM	23025	8RB#7	23.74	
Band12	3MHz	QPSK	23025	15RB#0	23.74	
Band12	3MHz	16QAM	23025	15RB#0	22.77	
Band12	3MHz	QPSK	23095	1RB#0	24.32	
Band12	3MHz	16QAM	23095	1RB#0	23.18	
Band12	3MHz	QPSK	23095	1RB#8	24.33	
Band12	3MHz	16QAM	23095	1RB#8	23.20	
Band12	3MHz	QPSK	23095	1RB#14	24.45	
Band12	3MHz	16QAM	23095	1RB#14	23.29	
Band12	3MHz	QPSK	23095	8RB#0	23.26	
Band12	3MHz	16QAM	23095	8RB#0	23.29	
Band12	3MHz	QPSK	23095	8RB#4	23.29	
Band12	3MHz	16QAM	23095	8RB#4	23.30	
Band12	3MHz	QPSK	23095	8RB#7	23.31	
Band12	3MHz	16QAM	23095	8RB#7	23.32	
Band12	3MHz	QPSK	23095	15RB#0	23.32	
Band12	3MHz	16QAM	23095	15RB#0	22.30	
Band12	3MHz	QPSK	23165	1RB#0	24.48	
Band12	3MHz	16QAM	23165	1RB#0	23.18	
Band12	3MHz	QPSK	23165	1RB#8	24.20	
Band12	3MHz	16QAM	23165	1RB#8	23.08	
Band12	3MHz	QPSK	23165	1RB#14	24.09	
Band12	3MHz	16QAM	23165	1RB#14	22.98	
Band12	3MHz	QPSK	23165	8RB#0	23.43	
Band12	3MHz	16QAM	23165	8RB#0	23.41	
Band12	3MHz	QPSK	23165	8RB#4	23.41	
Band12	3MHz	16QAM	23165	8RB#4	23.42	
Band12	3MHz	QPSK	23165	8RB#7	23.42	
Band12	3MHz	16QAM	23165	8RB#7	23.42	
Band12	3MHz	QPSK	23165	15RB#0	23.43	
Band12	3MHz	16QAM	23165	15RB#0	22.40	
Band12	5MHz	QPSK	23035	1RB#0	24.55	
Band12	5MHz	16QAM	23035	1RB#0	23.46	
Band12	5MHz	QPSK	23035	1RB#12	24.79	
Band12	5MHz	16QAM	23035	1RB#12	23.73	
Band12	5MHz	QPSK	23035	1RB#24	24.24	
Band12	5MHz	16QAM	23035	1RB#24	23.11	
Band12	5MHz	QPSK	23035	12RB#0	24.03	
Band12	5MHz	16QAM	23035	12RB#0	23.96	
Band12	5MHz	QPSK	23035	12RB#6	23.94	
Band12	5MHz	16QAM	23035	12RB#6	23.91	
Band12	5MHz	QPSK	23035	12RB#13	23.30	
Band12	5MHz	16QAM	23035	12RB#13	23.37	

All rights reserved. Unless otherwise specified, no part of this report may be reproduced or utilized in any part, form or by any means, electronic or mechanical, including photocopying and microfilm, without permission in writing from TOWE.

Band12	5MHz	QPSK	23035	25RB#0	23.55	See Tune up Procedure
Band12	5MHz	16QAM	23035	25RB#0	22.55	
Band12	5MHz	QPSK	23095	1RB#0	24.34	
Band12	5MHz	16QAM	23095	1RB#0	23.39	
Band12	5MHz	QPSK	23095	1RB#12	24.37	
Band12	5MHz	16QAM	23095	1RB#12	23.37	
Band12	5MHz	QPSK	23095	1RB#24	24.21	
Band12	5MHz	16QAM	23095	1RB#24	23.19	
Band12	5MHz	QPSK	23095	12RB#0	23.17	
Band12	5MHz	16QAM	23095	12RB#0	23.24	
Band12	5MHz	QPSK	23095	12RB#6	23.25	
Band12	5MHz	16QAM	23095	12RB#6	23.26	
Band12	5MHz	QPSK	23095	12RB#13	23.24	
Band12	5MHz	16QAM	23095	12RB#13	23.20	
Band12	5MHz	QPSK	23095	25RB#0	23.38	
Band12	5MHz	16QAM	23095	25RB#0	22.40	
Band12	5MHz	QPSK	23155	1RB#0	24.53	
Band12	5MHz	16QAM	23155	1RB#0	23.28	
Band12	5MHz	QPSK	23155	1RB#12	24.25	
Band12	5MHz	16QAM	23155	1RB#12	23.25	
Band12	5MHz	QPSK	23155	1RB#24	24.22	
Band12	5MHz	16QAM	23155	1RB#24	23.20	
Band12	5MHz	QPSK	23155	12RB#0	23.73	
Band12	5MHz	16QAM	23155	12RB#0	23.68	
Band12	5MHz	QPSK	23155	12RB#6	23.67	
Band12	5MHz	16QAM	23155	12RB#6	23.67	
Band12	5MHz	QPSK	23155	12RB#13	23.48	
Band12	5MHz	16QAM	23155	12RB#13	23.51	
Band12	5MHz	QPSK	23155	25RB#0	23.44	
Band12	5MHz	16QAM	23155	25RB#0	22.49	
Band12	10MHz	QPSK	23060	1RB#0	**24.77**	
Band12	10MHz	16QAM	23060	1RB#0	23.46	
Band12	10MHz	QPSK	23060	1RB#24	24.50	
Band12	10MHz	16QAM	23060	1RB#24	23.30	
Band12	10MHz	QPSK	23060	1RB#49	24.71	
Band12	10MHz	16QAM	23060	1RB#49	23.40	
Band12	10MHz	QPSK	23060	25RB#0	24.09	
Band12	10MHz	16QAM	23060	25RB#0	24.18	
Band12	10MHz	QPSK	23060	25RB#13	**24.16**	
Band12	10MHz	16QAM	23060	25RB#13	24.13	
Band12	10MHz	QPSK	23060	25RB#25	23.85	
Band12	10MHz	16QAM	23060	25RB#25	23.87	
Band12	10MHz	QPSK	23060	50RB#0	23.60	
Band12	10MHz	QPSK	23095	1RB#0	24.64	
Band12	10MHz	16QAM	23095	1RB#0	23.44	
Band12	10MHz	QPSK	23095	1RB#24	24.53	
Band12	10MHz	16QAM	23095	1RB#24	23.57	
Band12	10MHz	QPSK	23095	1RB#49	24.54	
Band12	10MHz	16QAM	23095	1RB#49	23.52	
Band12	10MHz	QPSK	23095	25RB#0	23.36	
Band12	10MHz	16QAM	23095	25RB#0	23.37	
Band12	10MHz	QPSK	23095	25RB#13	23.35	
Band12	10MHz	16QAM	23095	25RB#13	23.36	
Band12	10MHz	QPSK	23095	25RB#25	23.40	
Band12	10MHz	16QAM	23095	25RB#25	23.33	
Band12	10MHz	QPSK	23095	50RB#0	23.38	
Band12	10MHz	QPSK	23130	1RB#0	24.75	
Band12	10MHz	16QAM	23130	1RB#0	23.40	
Band12	10MHz	QPSK	23130	1RB#24	24.68	
Band12	10MHz	16QAM	23130	1RB#24	23.37	

All rights reserved. Unless otherwise specified, no part of this report may be reproduced or utilized in any part, form or by any means, electronic or mechanical, including photocopying and microfilm, without permission in writing from TOWE.

Band12	10MHz	QPSK	23130	1RB#49	24.29	See Tune up Procedure
Band12	10MHz	16QAM	23130	1RB#49	23.14	
Band12	10MHz	QPSK	23130	25RB#0	23.56	
Band12	10MHz	16QAM	23130	25RB#0	23.48	
Band12	10MHz	QPSK	23130	25RB#13	23.44	
Band12	10MHz	16QAM	23130	25RB#13	23.40	
Band12	10MHz	QPSK	23130	25RB#25	23.47	
Band12	10MHz	16QAM	23130	25RB#25	23.59	
Band12	10MHz	QPSK	23130	50RB#0	23.32	

Band	Bandwidth	Modulation	Channel	RB Configuration	Result(dBm)	Tune up(dBm)
Band17	5MHz	QPSK	23755	1RB#0	25.52	See Tune up Procedure
Band17	5MHz	16QAM	23755	1RB#0	24.37	
Band17	5MHz	QPSK	23755	1RB#12	25.25	
Band17	5MHz	16QAM	23755	1RB#12	24.17	
Band17	5MHz	QPSK	23755	1RB#24	25.58	
Band17	5MHz	16QAM	23755	1RB#24	24.50	
Band17	5MHz	QPSK	23755	12RB#0	24.07	
Band17	5MHz	16QAM	23755	12RB#0	24.10	
Band17	5MHz	QPSK	23755	12RB#6	24.08	
Band17	5MHz	16QAM	23755	12RB#6	24.06	
Band17	5MHz	QPSK	23755	12RB#13	24.52	
Band17	5MHz	16QAM	23755	12RB#13	24.49	
Band17	5MHz	QPSK	23755	25RB#0	24.27	
Band17	5MHz	16QAM	23755	25RB#0	23.29	
Band17	5MHz	QPSK	23790	1RB#0	25.49	
Band17	5MHz	16QAM	23790	1RB#0	24.28	
Band17	5MHz	QPSK	23790	1RB#12	25.41	
Band17	5MHz	16QAM	23790	1RB#12	24.28	
Band17	5MHz	QPSK	23790	1RB#24	25.21	
Band17	5MHz	16QAM	23790	1RB#24	24.18	
Band17	5MHz	QPSK	23790	12RB#0	24.44	
Band17	5MHz	16QAM	23790	12RB#0	24.40	
Band17	5MHz	QPSK	23790	12RB#6	24.37	
Band17	5MHz	16QAM	23790	12RB#6	24.37	
Band17	5MHz	QPSK	23790	12RB#13	24.32	
Band17	5MHz	16QAM	23790	12RB#13	24.33	
Band17	5MHz	QPSK	23790	25RB#0	24.20	
Band17	5MHz	16QAM	23790	25RB#0	23.22	
Band17	5MHz	QPSK	23825	1RB#0	25.31	
Band17	5MHz	16QAM	23825	1RB#0	24.30	
Band17	5MHz	QPSK	23825	1RB#12	24.45	
Band17	5MHz	16QAM	23825	1RB#12	24.04	
Band17	5MHz	QPSK	23825	1RB#24	24.93	
Band17	5MHz	16QAM	23825	1RB#24	24.08	
Band17	5MHz	QPSK	23825	12RB#0	24.53	
Band17	5MHz	16QAM	23825	12RB#0	24.49	
Band17	5MHz	QPSK	23825	12RB#6	24.46	
Band17	5MHz	16QAM	23825	12RB#6	24.46	
Band17	5MHz	QPSK	23825	12RB#13	24.22	
Band17	5MHz	16QAM	23825	12RB#13	24.26	
Band17	5MHz	QPSK	23825	25RB#0	24.29	
Band17	5MHz	16QAM	23825	25RB#0	23.28	
Band17	10MHz	QPSK	23780	1RB#0	25.26	
Band17	10MHz	16QAM	23780	1RB#0	23.92	
Band17	10MHz	QPSK	23780	1RB#24	25.42	
Band17	10MHz	16QAM	23780	1RB#24	24.13	
Band17	10MHz	QPSK	23780	1RB#49	24.65	
Band17	10MHz	16QAM	23780	1RB#49	24.08	

All rights reserved. Unless otherwise specified, no part of this report may be reproduced or utilized in any part, form or by any means, electronic or mechanical, including photocopying and microfilm, without permission in writing from TOWE.

Band17	10MHz	QPSK	23780	25RB#0	24.01	See Tune up Procedure
Band17	10MHz	16QAM	23780	25RB#0	23.99	
Band17	10MHz	QPSK	23780	25RB#13	23.99	
Band17	10MHz	16QAM	23780	25RB#13	23.98	
Band17	10MHz	QPSK	23780	25RB#25	24.32	
Band17	10MHz	16QAM	23780	25RB#25	24.28	
Band17	10MHz	QPSK	23780	50RB#0	23.99	
Band17	10MHz	QPSK	23790	1RB#0	25.48	
Band17	10MHz	16QAM	23790	1RB#0	24.05	
Band17	10MHz	QPSK	23790	1RB#24	25.80	
Band17	10MHz	16QAM	23790	1RB#24	24.45	
Band17	10MHz	QPSK	23790	1RB#49	24.67	
Band17	10MHz	16QAM	23790	1RB#49	24.09	
Band17	10MHz	QPSK	23790	25RB#0	23.95	
Band17	10MHz	16QAM	23790	25RB#0	23.89	
Band17	10MHz	QPSK	23790	25RB#13	23.82	
Band17	10MHz	16QAM	23790	25RB#13	23.86	
Band17	10MHz	QPSK	23790	25RB#25	24.47	
Band17	10MHz	16QAM	23790	25RB#25	24.40	
Band17	10MHz	QPSK	23790	50RB#0	24.09	
Band17	10MHz	QPSK	23800	1RB#0	25.24	
Band17	10MHz	16QAM	23800	1RB#0	23.97	
Band17	10MHz	QPSK	23800	1RB#24	25.59	
Band17	10MHz	16QAM	23800	1RB#24	24.55	
Band17	10MHz	QPSK	23800	1RB#49	24.64	
Band17	10MHz	16QAM	23800	1RB#49	24.05	
Band17	10MHz	QPSK	23800	25RB#0	23.99	
Band17	10MHz	16QAM	23800	25RB#0	24.08	
Band17	10MHz	QPSK	23800	25RB#13	24.05	
Band17	10MHz	16QAM	23800	25RB#13	24.02	
Band17	10MHz	QPSK	23800	25RB#25	24.38	
Band17	10MHz	16QAM	23800	25RB#25	24.37	
Band17	10MHz	QPSK	23800	50RB#0	24.07	

Band	Bandwidth	Modulation	Channel	RB Configuration	Result(dBm)	Tune up(dBm)
Band13	5MHz	QPSK	23205	1RB#0	24.14	See Tune up Procedure
Band13	5MHz	16QAM	23205	1RB#0	22.89	
Band13	5MHz	QPSK	23205	1RB#12	23.67	
Band13	5MHz	16QAM	23205	1RB#12	22.68	
Band13	5MHz	QPSK	23205	1RB#24	23.72	
Band13	5MHz	16QAM	23205	1RB#24	22.58	
Band13	5MHz	QPSK	23205	12RB#0	22.85	
Band13	5MHz	16QAM	23205	12RB#0	22.83	
Band13	5MHz	QPSK	23205	12RB#6	22.81	
Band13	5MHz	16QAM	23205	12RB#6	22.80	
Band13	5MHz	QPSK	23205	12RB#13	22.84	
Band13	5MHz	16QAM	23205	12RB#13	22.93	
Band13	5MHz	QPSK	23205	25RB#0	22.62	
Band13	5MHz	16QAM	23205	25RB#0	21.52	
Band13	5MHz	QPSK	23230	1RB#0	23.35	
Band13	5MHz	16QAM	23230	1RB#0	22.38	
Band13	5MHz	QPSK	23230	1RB#12	23.74	
Band13	5MHz	16QAM	23230	1RB#12	22.72	
Band13	5MHz	QPSK	23230	1RB#24	23.77	
Band13	5MHz	16QAM	23230	1RB#24	22.53	
Band13	5MHz	QPSK	23230	12RB#0	22.31	
Band13	5MHz	16QAM	23230	12RB#0	22.37	
Band13	5MHz	QPSK	23230	12RB#6	22.39	
Band13	5MHz	16QAM	23230	12RB#6	22.40	

All rights reserved. Unless otherwise specified, no part of this report may be reproduced or utilized in any part, form or by any means, electronic or mechanical, including photocopying and microfilm, without permission in writing from TOWE.

Band13	5MHz	QPSK	23230	12RB#13	22.88	See Tune up Procedure
Band13	5MHz	16QAM	23230	12RB#13	22.78	
Band13	5MHz	QPSK	23230	25RB#0	22.74	
Band13	5MHz	16QAM	23230	25RB#0	21.78	
Band13	5MHz	QPSK	23255	1RB#0	23.83	
Band13	5MHz	16QAM	23255	1RB#0	22.85	
Band13	5MHz	QPSK	23255	1RB#12	23.36	
Band13	5MHz	16QAM	23255	1RB#12	22.37	
Band13	5MHz	QPSK	23255	1RB#24	23.21	
Band13	5MHz	16QAM	23255	1RB#24	22.26	
Band13	5MHz	QPSK	23255	12RB#0	22.65	
Band13	5MHz	16QAM	23255	12RB#0	22.60	
Band13	5MHz	QPSK	23255	12RB#6	22.58	
Band13	5MHz	16QAM	23255	12RB#6	22.57	
Band13	5MHz	QPSK	23255	12RB#13	22.20	
Band13	5MHz	16QAM	23255	12RB#13	22.19	
Band13	5MHz	QPSK	23255	25RB#0	22.29	
Band13	5MHz	16QAM	23255	25RB#0	21.28	
Band13	10MHz	QPSK	23230	1RB#0	23.76	
Band13	10MHz	16QAM	23230	1RB#0	22.49	
Band13	10MHz	QPSK	23230	1RB#24	**23.79**	
Band13	10MHz	16QAM	23230	1RB#24	22.60	
Band13	10MHz	QPSK	23230	1RB#49	23.48	
Band13	10MHz	16QAM	23230	1RB#49	22.16	
Band13	10MHz	QPSK	23230	25RB#0	22.57	
Band13	10MHz	16QAM	23230	25RB#0	22.58	
Band13	10MHz	QPSK	23230	25RB#13	22.57	
Band13	10MHz	16QAM	23230	25RB#13	22.59	
Band13	10MHz	QPSK	23230	25RB#25	**22.79**	
Band13	10MHz	16QAM	23230	25RB#25	22.70	
Band13	10MHz	QPSK	23230	50RB#0	22.74	

Band	Bandwidth	Modulation	Channel	RB Configuration	Result(dBm)	Tune up(dBm)
Band41	5MHz	QPSK	39675	1RB#0	22.65	See Tune up Procedure
Band41	5MHz	16QAM	39675	1RB#0	22.20	
Band41	5MHz	QPSK	39675	1RB#12	23.00	
Band41	5MHz	16QAM	39675	1RB#12	22.29	
Band41	5MHz	QPSK	39675	1RB#24	22.76	
Band41	5MHz	16QAM	39675	1RB#24	22.33	
Band41	5MHz	QPSK	39675	12RB#0	22.49	
Band41	5MHz	16QAM	39675	12RB#0	22.48	
Band41	5MHz	QPSK	39675	12RB#6	22.46	
Band41	5MHz	16QAM	39675	12RB#6	22.45	
Band41	5MHz	QPSK	39675	12RB#13	22.45	
Band41	5MHz	16QAM	39675	12RB#13	22.44	
Band41	5MHz	QPSK	39675	25RB#0	22.43	
Band41	5MHz	16QAM	39675	25RB#0	22.52	
Band41	5MHz	QPSK	40620	1RB#0	22.88	
Band41	5MHz	16QAM	40620	1RB#0	22.28	
Band41	5MHz	QPSK	40620	1RB#12	22.89	
Band41	5MHz	16QAM	40620	1RB#12	22.01	
Band41	5MHz	QPSK	40620	1RB#24	22.93	
Band41	5MHz	16QAM	40620	1RB#24	21.99	
Band41	5MHz	QPSK	40620	12RB#0	22.05	
Band41	5MHz	16QAM	40620	12RB#0	22.05	
Band41	5MHz	QPSK	40620	12RB#6	22.06	
Band41	5MHz	16QAM	40620	12RB#6	22.07	
Band41	5MHz	QPSK	40620	12RB#13	22.07	
Band41	5MHz	16QAM	40620	12RB#13	22.07	

All rights reserved. Unless otherwise specified, no part of this report may be reproduced or utilized in any part, form or by any means, electronic or mechanical, including photocopying and microfilm, without permission in writing from TOWE.

Band41	5MHz	QPSK	40620	25RB#0	22.08	See Tune up Procedure
Band41	5MHz	16QAM	40620	25RB#0	22.16	
Band41	5MHz	QPSK	41565	1RB#0	22.76	
Band41	5MHz	16QAM	41565	1RB#0	21.66	
Band41	5MHz	QPSK	41565	1RB#12	22.76	
Band41	5MHz	16QAM	41565	1RB#12	21.82	
Band41	5MHz	QPSK	41565	1RB#24	22.90	
Band41	5MHz	16QAM	41565	1RB#24	21.85	
Band41	5MHz	QPSK	41565	12RB#0	21.92	
Band41	5MHz	16QAM	41565	12RB#0	21.93	
Band41	5MHz	QPSK	41565	12RB#6	21.93	
Band41	5MHz	16QAM	41565	12RB#6	21.93	
Band41	5MHz	QPSK	41565	12RB#13	21.92	
Band41	5MHz	16QAM	41565	12RB#13	21.92	
Band41	5MHz	QPSK	41565	25RB#0	21.92	
Band41	5MHz	16QAM	41565	25RB#0	22.35	
Band41	10MHz	QPSK	39700	1RB#0	22.93	
Band41	10MHz	16QAM	39700	1RB#0	22.74	
Band41	10MHz	QPSK	39700	1RB#24	23.02	
Band41	10MHz	16QAM	39700	1RB#24	22.02	
Band41	10MHz	QPSK	39700	1RB#49	22.78	
Band41	10MHz	16QAM	39700	1RB#49	23.02	
Band41	10MHz	QPSK	39700	25RB#0	22.26	
Band41	10MHz	16QAM	39700	25RB#0	22.24	
Band41	10MHz	QPSK	39700	25RB#13	22.23	
Band41	10MHz	16QAM	39700	25RB#13	22.23	
Band41	10MHz	QPSK	39700	25RB#25	22.52	
Band41	10MHz	16QAM	39700	25RB#25	22.50	
Band41	10MHz	QPSK	40620	1RB#0	22.20	
Band41	10MHz	16QAM	40620	1RB#0	22.50	
Band41	10MHz	QPSK	40620	1RB#24	22.80	
Band41	10MHz	16QAM	40620	1RB#24	22.15	
Band41	10MHz	QPSK	40620	1RB#49	22.73	
Band41	10MHz	16QAM	40620	1RB#49	21.91	
Band41	10MHz	QPSK	40620	25RB#0	22.18	
Band41	10MHz	16QAM	40620	25RB#0	22.25	
Band41	10MHz	QPSK	40620	25RB#13	22.24	
Band41	10MHz	16QAM	40620	25RB#13	22.20	
Band41	10MHz	QPSK	40620	25RB#25	22.13	
Band41	10MHz	16QAM	40620	25RB#25	22.22	
Band41	10MHz	QPSK	41540	1RB#0	22.89	
Band41	10MHz	16QAM	41540	1RB#0	21.61	
Band41	10MHz	QPSK	41540	1RB#24	22.89	
Band41	10MHz	16QAM	41540	1RB#24	21.66	
Band41	10MHz	QPSK	41540	1RB#49	22.89	
Band41	10MHz	16QAM	41540	1RB#49	21.66	
Band41	10MHz	QPSK	41540	25RB#0	22.07	
Band41	10MHz	16QAM	41540	25RB#0	22.05	
Band41	10MHz	QPSK	41540	25RB#13	22.05	
Band41	10MHz	16QAM	41540	25RB#13	22.05	
Band41	10MHz	QPSK	41540	25RB#25	22.08	
Band41	10MHz	16QAM	41540	25RB#25	22.07	
Band41	10MHz	QPSK	39700	50RB#0	22.36	
Band41	10MHz	QPSK	40620	50RB#0	22.09	
Band41	10MHz	QPSK	41540	50RB#0	21.94	
Band41	15MHz	QPSK	39725	1RB#0	22.56	
Band41	15MHz	16QAM	39725	1RB#0	22.84	
Band41	15MHz	QPSK	39725	1RB#38	22.85	
Band41	15MHz	16QAM	39725	1RB#38	22.40	
Band41	15MHz	QPSK	39725	1RB#74	22.58	

All rights reserved. Unless otherwise specified, no part of this report may be reproduced or utilized in any part, form or by any means, electronic or mechanical, including photocopying and microfilm, without permission in writing from TOWE.

Band41	15MHz	16QAM	39725	1RB#74	22.82	See Tune up Procedure
Band41	15MHz	QPSK	39725	38RB#0	22.13	
Band41	15MHz	16QAM	39725	38RB#0	22.10	
Band41	15MHz	QPSK	39725	38RB#18	23.07	
Band41	15MHz	16QAM	39725	38RB#18	23.05	
Band41	15MHz	QPSK	39725	38RB#37	23.04	
Band41	15MHz	16QAM	39725	38RB#37	23.07	
Band41	15MHz	QPSK	40620	1RB#0	22.25	
Band41	15MHz	16QAM	40620	1RB#0	22.30	
Band41	15MHz	QPSK	40620	1RB#38	22.70	
Band41	15MHz	16QAM	40620	1RB#38	21.68	
Band41	15MHz	QPSK	40620	1RB#74	22.36	
Band41	15MHz	16QAM	40620	1RB#74	21.68	
Band41	15MHz	QPSK	40620	38RB#0	21.87	
Band41	15MHz	16QAM	40620	38RB#0	21.87	
Band41	15MHz	QPSK	40620	38RB#18	21.85	
Band41	15MHz	16QAM	40620	38RB#18	21.86	
Band41	15MHz	QPSK	40620	38RB#37	21.90	
Band41	15MHz	16QAM	40620	38RB#37	21.95	
Band41	15MHz	QPSK	41515	1RB#0	22.96	
Band41	15MHz	16QAM	41515	1RB#0	22.13	
Band41	15MHz	QPSK	41515	1RB#38	22.91	
Band41	15MHz	16QAM	41515	1RB#38	22.13	
Band41	15MHz	QPSK	41515	1RB#74	22.80	
Band41	15MHz	16QAM	41515	1RB#74	22.02	
Band41	15MHz	QPSK	41515	38RB#0	21.99	
Band41	15MHz	16QAM	41515	38RB#0	21.96	
Band41	15MHz	QPSK	41515	38RB#18	22.07	
Band41	15MHz	16QAM	41515	38RB#18	22.05	
Band41	15MHz	QPSK	41515	38RB#37	22.05	
Band41	15MHz	16QAM	41515	38RB#37	22.06	
Band41	15MHz	QPSK	39725	75RB#0	22.22	
Band41	15MHz	QPSK	40620	75RB#0	22.02	
Band41	15MHz	QPSK	41515	75RB#0	22.08	
Band41	20MHz	QPSK	39750	1RB#0	**23.09**	
Band41	20MHz	16QAM	39750	1RB#0	22.26	
Band41	20MHz	QPSK	39750	1RB#49	23.01	
Band41	20MHz	16QAM	39750	1RB#49	22.21	
Band41	20MHz	QPSK	39750	1RB#99	22.65	
Band41	20MHz	16QAM	39750	1RB#99	22.74	
Band41	20MHz	QPSK	39750	50RB#0	22.30	
Band41	20MHz	QPSK	39750	50RB#25	**22.70**	
Band41	20MHz	16QAM	39750	50RB#25	22.72	
Band41	20MHz	QPSK	39750	50RB#50	22.64	
Band41	20MHz	16QAM	39750	50RB#50	22.00	
Band41	20MHz	QPSK	40620	1RB#0	22.59	
Band41	20MHz	16QAM	40620	1RB#0	22.23	
Band41	20MHz	QPSK	40620	1RB#49	22.54	
Band41	20MHz	16QAM	40620	1RB#49	21.57	
Band41	20MHz	QPSK	40620	1RB#99	23.02	
Band41	20MHz	16QAM	40620	1RB#99	21.89	
Band41	20MHz	QPSK	40620	50RB#0	21.71	
Band41	20MHz	16QAM	40620	50RB#0	22.01	
Band41	20MHz	QPSK	40620	50RB#25	21.84	
Band41	20MHz	16QAM	40620	50RB#25	21.93	
Band41	20MHz	QPSK	40620	50RB#50	21.52	
Band41	20MHz	16QAM	40620	50RB#50	22.05	
Band41	20MHz	QPSK	41490	1RB#0	22.95	
Band41	20MHz	16QAM	41490	1RB#0	22.02	
Band41	20MHz	QPSK	41490	1RB#49	22.49	

All rights reserved. Unless otherwise specified, no part of this report may be reproduced or utilized in any part, form or by any means, electronic or mechanical, including photocopying and microfilm, without permission in writing from TOWE.

Band41	20MHz	16QAM	41490	1RB#49	21.66	See Tune up Procedure
Band41	20MHz	QPSK	41490	1RB#99	22.42	
Band41	20MHz	16QAM	41490	1RB#99	21.55	
Band41	20MHz	QPSK	41490	50RB#0	21.68	
Band41	20MHz	16QAM	41490	50RB#0	21.82	
Band41	20MHz	QPSK	41490	50RB#25	21.77	
Band41	20MHz	16QAM	41490	50RB#25	21.83	
Band41	20MHz	QPSK	41490	50RB#50	21.75	
Band41	20MHz	16QAM	41490	50RB#50	22.10	
Band41	20MHz	QPSK	39750	100RB#0	22.72	
Band41	20MHz	QPSK	40620	100RB#0	21.72	
Band41	20MHz	QPSK	41490	100RB#0	21.58	

Band	Bandwidth	Modulation	Channel	RB Configuration	Result(dBm)	Tune up(dBm)
Band38	5MHz	QPSK	37775	1RB#0	22.34	See Tune up Procedure
Band38	5MHz	16QAM	37775	1RB#0	21.55	
Band38	5MHz	QPSK	37775	1RB#12	22.70	
Band38	5MHz	16QAM	37775	1RB#12	21.74	
Band38	5MHz	QPSK	37775	1RB#24	22.78	
Band38	5MHz	16QAM	37775	1RB#24	21.94	
Band38	5MHz	QPSK	37775	12RB#0	22.08	
Band38	5MHz	16QAM	37775	12RB#0	22.08	
Band38	5MHz	QPSK	37775	12RB#6	22.05	
Band38	5MHz	16QAM	37775	12RB#6	22.15	
Band38	5MHz	QPSK	37775	12RB#13	22.15	
Band38	5MHz	16QAM	37775	12RB#13	22.14	
Band38	5MHz	QPSK	37775	25RB#0	22.15	
Band38	5MHz	16QAM	37775	25RB#0	22.87	
Band38	5MHz	QPSK	38000	1RB#0	23.75	
Band38	5MHz	16QAM	38000	1RB#0	22.85	
Band38	5MHz	QPSK	38000	1RB#12	23.65	
Band38	5MHz	16QAM	38000	1RB#12	22.81	
Band38	5MHz	QPSK	38000	1RB#24	23.71	
Band38	5MHz	16QAM	38000	1RB#24	22.89	
Band38	5MHz	QPSK	38000	12RB#0	22.98	
Band38	5MHz	16QAM	38000	12RB#0	22.99	
Band38	5MHz	QPSK	38000	12RB#6	22.98	
Band38	5MHz	16QAM	38000	12RB#6	22.98	
Band38	5MHz	QPSK	38000	12RB#13	22.98	
Band38	5MHz	16QAM	38000	12RB#13	22.98	
Band38	5MHz	QPSK	38000	25RB#0	22.98	
Band38	5MHz	16QAM	38000	25RB#0	21.84	
Band38	5MHz	QPSK	38225	1RB#0	23.81	
Band38	5MHz	16QAM	38225	1RB#0	22.87	
Band38	5MHz	QPSK	38225	1RB#12	23.88	
Band38	5MHz	16QAM	38225	1RB#12	23.06	
Band38	5MHz	QPSK	38225	1RB#24	23.94	
Band38	5MHz	16QAM	38225	1RB#24	22.97	
Band38	5MHz	QPSK	38225	12RB#0	23.17	
Band38	5MHz	16QAM	38225	12RB#0	23.17	
Band38	5MHz	QPSK	38225	12RB#6	23.17	
Band38	5MHz	16QAM	38225	12RB#6	23.18	
Band38	5MHz	QPSK	38225	12RB#13	23.18	
Band38	5MHz	16QAM	38225	12RB#13	23.18	
Band38	5MHz	QPSK	38225	25RB#0	23.18	
Band38	5MHz	16QAM	38225	25RB#0	22.19	
Band38	10MHz	QPSK	37800	1RB#0	22.68	
Band38	10MHz	16QAM	37800	1RB#0	21.87	
Band38	10MHz	QPSK	37800	1RB#24	22.87	

All rights reserved. Unless otherwise specified, no part of this report may be reproduced or utilized in any part, form or by any means, electronic or mechanical, including photocopying and microfilm, without permission in writing from TOWE.

Band38	10MHz	16QAM	37800	1RB#24	22.07	See Tune up Procedure
Band38	10MHz	QPSK	37800	1RB#49	22.94	
Band38	10MHz	16QAM	37800	1RB#49	22.28	
Band38	10MHz	QPSK	37800	25RB#0	22.10	
Band38	10MHz	16QAM	37800	25RB#0	22.09	
Band38	10MHz	QPSK	37800	25RB#13	22.08	
Band38	10MHz	16QAM	37800	25RB#13	22.09	
Band38	10MHz	QPSK	37800	25RB#25	22.28	
Band38	10MHz	16QAM	37800	25RB#25	22.28	
Band38	10MHz	QPSK	37800	50RB#0	22.18	
Band38	10MHz	QPSK	38000	1RB#0	23.41	
Band38	10MHz	16QAM	38000	1RB#0	22.69	
Band38	10MHz	QPSK	38000	1RB#24	23.67	
Band38	10MHz	16QAM	38000	1RB#24	22.87	
Band38	10MHz	QPSK	38000	1RB#49	23.85	
Band38	10MHz	16QAM	38000	1RB#49	23.02	
Band38	10MHz	QPSK	38000	25RB#0	22.71	
Band38	10MHz	16QAM	38000	25RB#0	22.70	
Band38	10MHz	QPSK	38000	25RB#13	22.69	
Band38	10MHz	16QAM	38000	25RB#13	22.69	
Band38	10MHz	QPSK	38000	25RB#25	22.89	
Band38	10MHz	16QAM	38000	25RB#25	23.01	
Band38	10MHz	QPSK	38000	50RB#0	22.85	
Band38	10MHz	QPSK	38200	1RB#0	24.07	
Band38	10MHz	16QAM	38200	1RB#0	23.18	
Band38	10MHz	QPSK	38200	1RB#24	23.69	
Band38	10MHz	16QAM	38200	1RB#24	22.91	
Band38	10MHz	QPSK	38200	1RB#49	23.60	
Band38	10MHz	16QAM	38200	1RB#49	22.93	
Band38	10MHz	QPSK	38200	25RB#0	23.03	
Band38	10MHz	16QAM	38200	25RB#0	23.03	
Band38	10MHz	QPSK	38200	25RB#13	23.01	
Band38	10MHz	16QAM	38200	25RB#13	23.02	
Band38	10MHz	QPSK	38200	25RB#25	22.93	
Band38	10MHz	16QAM	38200	25RB#25	22.94	
Band38	10MHz	QPSK	38200	50RB#0	22.90	
Band38	15MHz	QPSK	37825	1RB#0	22.49	
Band38	15MHz	16QAM	37825	1RB#0	21.64	
Band38	15MHz	QPSK	37825	1RB#38	23.08	
Band38	15MHz	16QAM	37825	1RB#38	22.01	
Band38	15MHz	QPSK	37825	1RB#74	23.34	
Band38	15MHz	16QAM	37825	1RB#74	22.35	
Band38	15MHz	QPSK	37825	38RB#0	22.27	
Band38	15MHz	16QAM	37825	38RB#0	22.30	
Band38	15MHz	QPSK	37825	38RB#18	22.35	
Band38	15MHz	16QAM	37825	38RB#18	22.34	
Band38	15MHz	QPSK	37825	38RB#37	22.34	
Band38	15MHz	16QAM	37825	38RB#37	22.33	
Band38	15MHz	QPSK	37825	75RB#0	22.34	
Band38	15MHz	QPSK	38000	1RB#0	23.32	
Band38	15MHz	16QAM	38000	1RB#0	22.68	
Band38	15MHz	QPSK	38000	1RB#38	23.72	
Band38	15MHz	16QAM	38000	1RB#38	23.01	
Band38	15MHz	QPSK	38000	1RB#74	23.98	
Band38	15MHz	16QAM	38000	1RB#74	23.26	
Band38	15MHz	QPSK	38000	38RB#0	22.87	
Band38	15MHz	16QAM	38000	38RB#0	22.97	
Band38	15MHz	QPSK	38000	38RB#18	22.97	
Band38	15MHz	16QAM	38000	38RB#18	22.96	
Band38	15MHz	QPSK	38000	38RB#37	22.95	

All rights reserved. Unless otherwise specified, no part of this report may be reproduced or utilized in any part, form or by any means, electronic or mechanical, including photocopying and microfilm, without permission in writing from TOWE.

Band38	15MHz	16QAM	38000	38RB#37	22.95	See Tune up Procedure
Band38	15MHz	QPSK	38000	75RB#0	22.94	
Band38	15MHz	QPSK	38175	1RB#0	23.85	
Band38	15MHz	16QAM	38175	1RB#0	23.14	
Band38	15MHz	QPSK	38175	1RB#38	24.12	
Band38	15MHz	16QAM	38175	1RB#38	23.22	
Band38	15MHz	QPSK	38175	1RB#74	23.84	
Band38	15MHz	16QAM	38175	1RB#74	23.15	
Band38	15MHz	QPSK	38175	38RB#0	23.15	
Band38	15MHz	16QAM	38175	38RB#0	23.14	
Band38	15MHz	QPSK	38175	38RB#18	23.12	
Band38	15MHz	16QAM	38175	38RB#18	23.14	
Band38	15MHz	QPSK	38175	38RB#37	23.24	
Band38	15MHz	16QAM	38175	38RB#37	23.23	
Band38	15MHz	QPSK	38175	75RB#0	23.23	
Band38	20MHz	QPSK	37850	1RB#0	24.14	
Band38	20MHz	16QAM	37850	1RB#0	23.36	
Band38	20MHz	QPSK	37850	1RB#49	23.95	
Band38	20MHz	16QAM	37850	1RB#49	22.93	
Band38	20MHz	QPSK	37850	1RB#99	23.44	
Band38	20MHz	16QAM	37850	1RB#99	22.19	
Band38	20MHz	QPSK	37850	50RB#0	23.38	
Band38	20MHz	QPSK	37850	50RB#25	23.22	
Band38	20MHz	16QAM	37850	50RB#25	23.29	
Band38	20MHz	QPSK	37850	50RB#50	23.08	
Band38	20MHz	16QAM	37850	50RB#50	23.12	
Band38	20MHz	QPSK	37850	100RB#0	23.04	
Band38	20MHz	QPSK	38000	1RB#0	23.81	
Band38	20MHz	16QAM	38000	1RB#0	22.63	
Band38	20MHz	QPSK	38000	1RB#49	23.35	
Band38	20MHz	16QAM	38000	1RB#49	22.06	
Band38	20MHz	QPSK	38000	1RB#99	22.78	
Band38	20MHz	16QAM	38000	1RB#99	21.46	
Band38	20MHz	QPSK	38000	50RB#0	22.77	
Band38	20MHz	QPSK	38000	50RB#25	22.61	
Band38	20MHz	16QAM	38000	50RB#25	22.63	
Band38	20MHz	QPSK	38000	50RB#50	22.46	
Band38	20MHz	16QAM	38000	50RB#50	22.41	
Band38	20MHz	QPSK	38000	100RB#0	22.29	
Band38	20MHz	QPSK	38150	1RB#0	23.15	
Band38	20MHz	16QAM	38150	1RB#0	22.22	
Band38	20MHz	QPSK	38150	1RB#49	22.95	
Band38	20MHz	16QAM	38150	1RB#49	21.95	
Band38	20MHz	QPSK	38150	1RB#99	23.10	
Band38	20MHz	16QAM	38150	1RB#99	22.26	
Band38	20MHz	QPSK	38150	50RB#0	22.09	
Band38	20MHz	QPSK	38150	50RB#25	21.83	
Band38	20MHz	16QAM	38150	50RB#25	21.87	
Band38	20MHz	QPSK	38150	50RB#50	21.81	
Band38	20MHz	16QAM	38150	50RB#50	21.85	
Band38	20MHz	QPSK	38150	100RB#0	21.79	

All rights reserved. Unless otherwise specified, no part of this report may be reproduced or utilized in any part, form or by any means, electronic or mechanical, including photocopying and microfilm, without permission in writing from TOWE.

WIFI 2.4G			
Mode	Channel	Conducted Power (dBm)	Tune up (dBm)
802.11b	1	8.81	See Tune up Procedure
	6	8.03	
	11	9.25	
802.11g	1	8.29	
	6	6.96	
	11	8.42	
802.11n_20M	1	8.08	
	6	6.78	
	11	8.23	
802.11n_40M	3	7.83	
	6	7.46	
	9	8.19	

BLE			
Test Mode	Freq (MHz)	Conducted Power (dBm)	Tune up (dBm)
BLE_1M	2402	1.72	See Tune up Procedure
	2440	2.95	
	2480	1.86	

All rights reserved. Unless otherwise specified, no part of this report may be reproduced or utilized in any part, form or by any means, electronic or mechanical, including photocopying and microfilm, without permission in writing from TOWE.

14 Stand-alone SAR test evaluation

Unless specifically required by the published RF exposure KDB procedures, standalone 1-g head or body and Product specific 10g SAR evaluation for general population exposure conditions, by measurement or numerical simulation, is not required when the corresponding SAR Test Exclusion Threshold condition is satisfied. These test exclusion conditions are based on source-based time-averaged maximum conducted output power of the RF channel requiring evaluation, adjusted for tune-up tolerance, and the minimum test separation distance required for the exposure conditions.

Band	Frequency (GHz)	Max Average Power		Test Separation (mm)	Calculate Value	Exclusion Threshold	Exclusion (Y/N)
		dBm	mW				
WIFI 2.4G	2.4835	9.5	8.91	5	2.81	3	Y
BLE	2.4835	3.5	2.24	5	0.71	3	Y

The 1-g and 10-g SAR test exclusion thresholds for 100 MHz to 6 GHz at test separation distances ≤ 50 mm are determined by:
[(max. power of channel, including tune-up tolerance, mW)/(min. test separation distance, mm)] · [√f(GHz)] ≤ 3.0 for 1-g SAR and ≤ 7.5 for 10-g extremity SAR, where
• f(GHz) is the RF channel transmit frequency in GHz
• Power and distance are rounded to the nearest mW and mm before calculation
• The result is rounded to one decimal place for comparison

The test exclusions are applicable only when the minimum test separation distance is ≤ 50 mm and for transmission frequencies between 100 MHz and 6 GHz. When the minimum test separation distance is < 5 mm, a distance of 5 mm is applied to determine SAR test exclusion.

Estimated SAR:
When the standalone SAR test exclusion is applied to an antenna that transmits simultaneously with other antennas, the standalone SAR must be estimated according to the following to determine simultaneous transmission SAR test exclusion:
• (max. power of channel, including tune-up tolerance, mW)/(min. test separation distance, mm)]·[√f(GHz)/x] W/kg for test separation distances ≤ 50 mm;
Where x = 7.5 for 1-g SAR, and x = 18.75 for 10-g SAR.
When the minimum test separation distance is < 5 mm, a distance of 5 mm is applied to determine SAR test exclusion.

Estimated SAR Result					
Band	Frequency (GHz)	Test Position	Max. power (dBm)	Test Separation (mm)	Estimated SAR (W/kg)
WIFI 2.4G	2.4835	Body	9.5	5	0.375
BLE	2.48	Body	3.5	5	0.094

All rights reserved. Unless otherwise specified, no part of this report may be reproduced or utilized in any part, form or by any means, electronic or mechanical, including photocopying and microfilm, without permission in writing from TOWE.

15 SAR Data Summary

General Notes:

1) The Highest Reported SAR Plot refer to Appendix B.

2) Per KDB 447498 D01, testing of other required channels within the operating mode of a frequency band is not required when the reported 1g or 10g SAR for the mid-band or highest output power channel is:

- ≤ 0.8W/kg for 1g or 2.0W/kg for 10g respectively, when the transmission band is ≤ 100MHz.
- ≤ 0.6 W/kg or 1.5 W/kg, for 1g or 10g respectively, when the transmission band is between 100 MHz and 200MHz.
- ≤ 0.4 W/kg or 1.0 W/kg, for 1g or 10g respectively, when the transmission band is ≥ 200MHz.

All rights reserved. Unless otherwise specified, no part of this report may be reproduced or utilized in any part, form or by any means, electronic or mechanical, including photocopying and microfilm, without permission in writing from TOWE.

15.1 SAR Measurement Result of LTE Band 7

Test position	BW. (MHz)	Mode	Ch./Freq. (MHz)	SAR (W/kg) 1-g	SAR (W/kg) 10-g	Power Drift (dB)	Conducted Power(dBm)	Tune up Limit(dBm)	Scaling Factor	Reported 1g SAR (W/kg)
Body 5mm (1RB)										
Front side	20	QPSK 1_99	21350/2560	0.079	0.039	0.01	22.97	See Tune up Procedure	1.007	0.080
Back side	20	QPSK 1_99	21350/2560	0.160	0.079	-0.04	22.97		1.007	**0.161**
Left side	20	QPSK 1_99	21350/2560	0.004	0.002	0.00	22.97		1.007	0.004
Right side	20	QPSK 1_99	21350/2560	0.025	0.008	0.00	22.97		1.007	0.025
Top side	20	QPSK 1_99	21350/2560	0.063	0.029	0.05	22.97		1.007	0.063
Bottom side	20	QPSK 1_99	21350/2560	0.112	0.053	0.09	22.97		1.007	0.113
Body 5mm (50%RB)										
Front side	20	QPSK 50_50	20850/2510	0.080	0.040	0.03	22.61	See Tune up Procedure	1.069	0.086
Back side	20	QPSK 50_50	20850/2510	0.117	0.055	-0.02	22.61		1.069	0.125
Left side	20	QPSK 50_50	20850/2510	0.003	0.001	0.01	22.61		1.069	0.003
Right side	20	QPSK 50_50	20850/2510	0.022	0.007	0.00	22.61		1.069	0.024
Top side	20	QPSK 50_50	20850/2510	0.063	0.031	-0.04	22.61		1.069	0.067
Bottom side	20	QPSK 50_50	20850/2510	0.125	0.059	0.10	22.61		1.069	0.134

Table 3： SAR of LTE Band 7.

15.2 SAR Measurement Result of LTE Band 12

Test position	BW. (MHz)	Mode	Ch./Freq. (MHz)	SAR (W/kg) 1-g	SAR (W/kg) 10-g	Power Drift (dB)	Conducted Power(dBm)	Tune up Limit(dBm)	Scaling Factor	Reported 1g SAR (W/kg)
Body 5mm (1RB)										
Front side	10	QPSK 1_0	23060/704	0.077	0.046	0.02	24.77	See Tune up Procedure	1.297	0.100
Back side	10	QPSK 1_0	23060/704	0.076	0.044	0.09	24.77		1.297	0.099
Left side	10	QPSK 1_0	23060/704	0.346	0.149	-0.05	24.77		1.297	**0.449**
Right side	10	QPSK 1_0	23060/704	0.004	0.002	0.01	24.77		1.297	0.005
Top side	10	QPSK 1_0	23060/704	0.080	0.034	0.08	24.77		1.297	0.104
Bottom side	10	QPSK 1_0	23060/704	0.047	0.027	-0.01	24.77		1.297	0.061
Body 5mm (50%RB)										
Front side	10	QPSK 25_13	23060/704	0.071	0.042	0.09	24.16	See Tune up Procedure	1.186	0.084
Back side	10	QPSK 25_13	23060/704	0.065	0.038	-0.07	24.16		1.186	0.077
Left side	10	QPSK 25_13	23060/704	0.229	0.085	0.03	24.16		1.186	0.272
Right side	10	QPSK 25_13	23060/704	0.002	0.001	0.01	24.16		1.186	0.002
Top side	10	QPSK 25_13	23060/704	0.069	0.034	0.08	24.16		1.186	0.082
Bottom side	10	QPSK 25_13	23060/704	0.009	0.004	-0.02	24.16		1.186	0.011

Table 4： SAR of LTE Band 12.

All rights reserved. Unless otherwise specified, no part of this report may be reproduced or utilized in any part, form or by any means, electronic or mechanical, including photocopying and microfilm, without permission in writing from TOWE.

15.3 SAR Measurement Result of LTE Band 13

Test position	BW. (MHz)	Mode	Ch./Freq. (MHz)	SAR (W/kg) 1-g	SAR (W/kg) 10-g	Power Drift (dB)	Conducted Power(dBm)	Tune up Limit(dBm)	Scaling Factor	Reported 1g SAR (W/kg)
Body 5mm (1RB)										
Front side	10	QPSK 1_25	23230/782	0.168	0.099	0.02	23.79	See Tune up Procedure	1.099	0.185
Back side	10	QPSK 1_25	23230/782	0.164	0.096	0.09	23.79		1.099	0.180
Left side	10	QPSK 1_25	23230/782	0.353	0.162	-0.07	23.79		1.099	**0.388**
Right side	10	QPSK 1_25	23230/782	0.003	0.002	0.01	23.79		1.099	0.003
Top side	10	QPSK 1_25	23230/782	0.215	0.095	-0.06	23.79		1.099	0.236
Bottom side	10	QPSK 1_25	23230/782	0.083	0.038	0.05	23.79		1.099	0.091
Body 5mm (50%RB)										
Front side	10	QPSK 25_25	23230/782	0.177	0.104	0.05	22.79	See Tune up Procedure	1.050	0.186
Back side	10	QPSK 25_25	23230/782	0.175	0.102	0.09	22.79		1.050	0.184
Left side	10	QPSK 25_25	23230/782	0.312	0.148	0.07	22.79		1.050	0.327
Right side	10	QPSK 25_25	23230/782	0.002	0.001	0.00	22.79		1.050	0.002
Top side	10	QPSK 25_25	23230/782	0.159	0.086	-0.03	22.79		1.050	0.167
Bottom side	10	QPSK 25_25	23230/782	0.084	0.046	0.10	22.79		1.050	0.088

Table 5： SAR of LTE Band 13.

15.4 SAR Measurement Result of LTE Band 25

Test position	BW. (MHz)	Mode	Ch./Freq. (MHz)	SAR (W/kg) 1-g	SAR (W/kg) 10-g	Power Drift (dB)	Conducted Power(dBm)	Tune up Limit(dBm)	Scaling Factor	Reported 1g SAR (W/kg)
Body 5mm 1RB										
Front side	20	QPSK 1_49	26590/1905	0.565	0.313	0.03	23.17	See Tune up Procedure	1.054	0.596
Back side	20	QPSK 1_49	26590/1905	1.130	0.633	-0.06	23.17		1.054	**1.191**
Back side-repeat	20	QPSK 1_49	26590/1905	1.060	0.587	0.07	23.17		1.054	1.118
Left side	20	QPSK 1_49	26590/1905	0.123	0.063	0.01	23.17		1.054	0.130
Right side	20	QPSK 1_49	26590/1905	0.140	0.074	0.00	23.17		1.054	0.148
Top side	20	QPSK 1_49	26590/1905	0.171	0.093	-0.05	23.17		1.054	0.180
Bottom side	20	QPSK 1_49	26590/1905	0.669	0.371	0.06	23.17		1.054	0.705
Back side	20	QPSK 1_49	26140/1860	0.910	0.485	0.11	23.16		1.057	0.962
Back side	20	QPSK 1_0	26365/1882.5	1.020	0.501	0.08	22.98		1.102	1.124
Body 5mm 50%RB										
Front side	20	QPSK 50_0	26365/1882.5	0.400	0.221	0.02	23.26	See Tune up Procedure	1.009	0.404
Back side	20	QPSK 50_0	26365/1882.5	0.766	0.395	-0.06	23.26		1.009	0.773
Left side	20	QPSK 50_0	26365/1882.5	0.091	0.047	0.10	23.26		1.009	0.092
Right side	20	QPSK 50_0	26365/1882.5	0.093	0.049	0.07	23.26		1.009	0.094
Top side	20	QPSK 50_0	26365/1882.5	0.135	0.073	0.08	23.26		1.009	0.136
Bottom side	20	QPSK 50_0	26365/1882.5	0.522	0.278	-0.02	23.26		1.009	0.527
Body 5mm 100%RB										
Back side	20	QPSK 100_0	26365/1882.5	0.764	0.391	0.05	23.36	See Tune up Procedure	0.986	0.754

Table 6： SAR of LTE Band 25.

Test Position	Channel/ Frequency (MHz)	Measured SAR (1g)	1st Repeated SAR (1g)	Ratio	2nd Repeated SAR (1g)	3rd Repeated SAR (1g)
Back side	26590/1905	1.130	1.060	1.066	N/A	N/A
Note: 1) When the original highest measured SAR is ≥ 0.80 W/kg, the measurement was repeated once.						
2) A second repeated measurement was preformed only if the ratio of largest to smallest SAR for the original and first repeated measurements was > 1.20 or when the original or repeated measurement was ≥ 1.45 W/kg (~ 10% from the 1-g SAR limit).						
3) A third repeated measurement was performed only if the original, first or second repeated measurement was ≥ 1.5 W/kg and the ratio of largest to smallest SAR for the original, first and second repeated measurements is > 1.20.						
4) Repeated measurements are not required when the original highest measured SAR is < 0.80 W/kg						

All rights reserved. Unless otherwise specified, no part of this report may be reproduced or utilized in any part, form or by any means, electronic or mechanical, including photocopying and microfilm, without permission in writing from TOWE.

15.5 SAR Measurement Result of LTE Band 26

Test position	BW. (MHz)	Mode	Ch./Freq. (MHz)	SAR (W/kg) 1-g	SAR (W/kg) 10-g	Power Drift (dB)	Conducted Power(dBm)	Tune up Limit(dBm)	Scaling Factor	Reported 1g SAR (W/kg)
Body 5mm (1RB)										
Front side	15	QPSK 1_0	26965/841.5	0.175	0.102	0.03	25.14	See Tune up Procedure	1.138	0.199
Back side	15	QPSK 1_0	26965/841.5	0.166	0.100	-0.05	25.14		1.138	0.189
Left side	15	QPSK 1_0	26965/841.5	0.240	0.096	0.01	25.14		1.138	**0.273**
Right side	15	QPSK 1_0	26965/841.5	0.004	0.002	0.01	25.14		1.138	0.005
Top side	15	QPSK 1_0	26965/841.5	0.154	0.084	0.06	25.14		1.138	0.175
Bottom side	15	QPSK 1_0	26965/841.5	0.075	0.045	0.00	25.14		1.138	0.085
Body 5mm (50%RB)										
Front side	15	QPSK 36_0	26965/841.5	0.135	0.079	-0.02	23.94	See Tune up Procedure	1.191	0.161
Back side	15	QPSK 36_0	26965/841.5	0.134	0.080	0.05	23.94		1.191	0.160
Left side	15	QPSK 36_0	26965/841.5	0.208	0.089	0.09	23.94		1.191	0.248
Right side	15	QPSK 36_0	26965/841.5	0.003	0.000	0.00	23.94		1.191	0.004
Top side	15	QPSK 36_0	26965/841.5	0.128	0.067	0.07	23.94		1.191	0.152
Bottom side	15	QPSK 36_0	26965/841.5	0.064	0.036	-0.04	23.94		1.191	0.076

Table 7： SAR of LTE Band 26.

15.6 SAR Measurement Result of LTE Band 66

Test position	BW. (MHz)	Mode	Ch./Freq. (MHz)	SAR (W/kg) 1-g	SAR (W/kg) 10-g	Power Drift (dB)	Conducted Power(dBm)	Tune up Limit(dBm)	Scaling Factor	Reported 1g SAR (W/kg)
Body 5mm 1RB										
Front side	20	QPSK 1_99	132572/1770	0.205	0.114	0.01	22.51	See Tune up Procedure	1.172	0.240
Back side	20	QPSK 1_99	132572/1770	0.325	0.184	-0.02	22.51		1.172	**0.381**
Left side	20	QPSK 1_99	132572/1770	0.075	0.038	0.06	22.51		1.172	0.088
Right side	20	QPSK 1_99	132572/1770	0.106	0.057	-0.09	22.51		1.172	0.124
Top side	20	QPSK 1_99	132572/1770	0.178	0.099	0.02	22.51		1.172	0.209
Bottom side	20	QPSK 1_99	132572/1770	0.304	0.170	0.00	22.51		1.172	0.356
Body 5mm 50%RB										
Front side	20	QPSK 50_0	132572/1770	0.180	0.101	0.06	22.45	See Tune up Procedure	1.109	0.200
Back side	20	QPSK 50_0	132572/1770	0.306	0.173	0.11	22.45		1.109	0.339
Left side	20	QPSK 50_0	132572/1770	0.067	0.034	0.02	22.45		1.109	0.074
Right side	20	QPSK 50_0	132572/1770	0.104	0.057	-0.06	22.45		1.109	0.115
Top side	20	QPSK 50_0	132572/1770	0.170	0.094	0.10	22.45		1.109	0.189
Bottom side	20	QPSK 50_0	132572/1770	0.300	0.168	0.03	22.45		1.109	0.333

Table 8： SAR of LTE Band 66.

15.7 SAR Measurement Result of LTE Band 41

Test position	BW. (MHz)	Mode	Duty Cycle	Ch./Freq. (MHz)	SAR (W/kg) 1-g	SAR (W/kg) 10-g	Power Drift (dB)	Conducted Power(dBm)	Tune up Limit(dBm)	Scaling Factor	Reported 1g SAR (W/kg)
Body 5mm (1RB)											
Front side	20	QPSK 1_0	1:1.58	39750/2506	0.081	0.040	0.02	23.09	See Tune up Procedure	1.291	0.105
Back side	20	QPSK 1_0	1:1.58	39750/2506	0.092	0.042	-0.07	23.09		1.291	**0.119**
Left side	20	QPSK 1_0	1:1.58	39750/2506	0.004	0.002	0.00	23.09		1.291	0.005
Right side	20	QPSK 1_0	1:1.58	39750/2506	0.025	0.006	0.00	23.09		1.291	0.032
Top side	20	QPSK 1_0	1:1.58	39750/2506	0.089	0.041	-0.03	23.09		1.291	0.115
Bottom side	20	QPSK 1_0	1:1.58	39750/2506	0.075	0.035	0.06	23.09		1.291	0.097
Body 5mm (50%RB)											
Front side	20	QPSK 50_25	1:1.58	39750/2506	0.076	0.038	0.08	22.70	See Tune up Procedure	1.175	0.089
Back side	20	QPSK 50_25	1:1.58	39750/2506	0.088	0.042	-0.02	22.70		1.175	0.103
Left side	20	QPSK 50_25	1:1.58	39750/2506	0.003	0.001	0.00	22.70		1.175	0.004
Right side	20	QPSK 50_25	1:1.58	39750/2506	0.023	0.005	0.05	22.70		1.175	0.027
Top side	20	QPSK 50_25	1:1.58	39750/2506	0.089	0.038	-0.03	22.70		1.175	0.105
Bottom side	20	QPSK 50_25	1:1.58	39750/2506	0.074	0.033	0.07	22.70		1.175	0.087

Table 9： SAR of LTE Band 41.

All rights reserved. Unless otherwise specified, no part of this report may be reproduced or utilized in any part, form or by any means, electronic or mechanical, including photocopying and microfilm, without permission in writing from TOWE.

16 Simultaneous Transmission Analysis

The Simultaneous Transmission Possibilities of this device are as below:

NO.	Simultaneous TX Combination	
1	LTE + WIFI 2.4G	Yes
2	LTE + BT	Yes
3	WIFI 2.4G + BT	No
4	LTE + WIFI 2.4G + BT	No

16.1 Simultaneous Transmission SAR Summary

Test position		SAR_{max} (W/kg)			Summed SAR	
		Main Ant	WIFI 2.4G	BLE		
		1	2	3	1+2	1+3
LTE B7	Front side	0.086	0.375	0.094	0.461	0.180
	Back side	0.161	0.375	0.094	0.536	0.255
	Left side	0.004	0.375	0.094	0.379	0.098
	Right side	0.025	0.375	0.094	0.400	0.119
	Top side	0.067	0.375	0.094	0.442	0.161
	Bottom side	0.134	0.375	0.094	0.509	0.228
LTE B12/17	Front side	0.100	0.375	0.094	0.475	0.194
	Back side	0.099	0.375	0.094	0.474	0.193
	Left side	0.449	0.375	0.094	0.824	0.543
	Right side	0.005	0.375	0.094	0.380	0.099
	Top side	0.104	0.375	0.094	0.479	0.198
	Bottom side	0.061	0.375	0.094	0.436	0.155
LTE B13	Front side	0.186	0.375	0.094	0.561	0.280
	Back side	0.184	0.375	0.094	0.559	0.278
	Left side	0.388	0.375	0.094	0.763	0.482
	Right side	0.003	0.375	0.094	0.378	0.097
	Top side	0.236	0.375	0.094	0.611	0.330
	Bottom side	0.091	0.375	0.094	0.466	0.185
LTE B25/2	Front side	0.596	0.375	0.094	0.971	0.690
	Back side	1.191	0.375	0.094	1.566	1.285
	Left side	0.130	0.375	0.094	0.505	0.224
	Right side	0.148	0.375	0.094	0.523	0.242
	Top side	0.180	0.375	0.094	0.555	0.274
	Bottom side	0.705	0.375	0.094	1.080	0.799
LTE B26/5	Front side	0.199	0.375	0.094	0.574	0.293
	Back side	0.189	0.375	0.094	0.564	0.283
	Left side	0.273	0.375	0.094	0.648	0.367
	Right side	0.005	0.375	0.094	0.380	0.099
	Top side	0.175	0.375	0.094	0.550	0.269
	Bottom side	0.085	0.375	0.094	0.460	0.179
LTE B66/4	Front side	0.240	0.375	0.094	0.615	0.334
	Back side	0.381	0.375	0.094	0.756	0.475
	Left side	0.088	0.375	0.094	0.463	0.182
	Right side	0.124	0.375	0.094	0.499	0.218
	Top side	0.209	0.375	0.094	0.584	0.303
	Bottom side	0.356	0.375	0.094	0.731	0.450
LTE B41	Front side	0.105	0.375	0.094	0.480	0.199
	Back side	0.119	0.375	0.094	0.494	0.213
	Left side	0.005	0.375	0.094	0.380	0.099
	Right side	0.032	0.375	0.094	0.407	0.126
	Top side	0.115	0.375	0.094	0.490	0.209
	Bottom side	0.097	0.375	0.094	0.472	0.191

All rights reserved. Unless otherwise specified, no part of this report may be reproduced or utilized in any part, form or by any means, electronic or mechanical, including photocopying and microfilm, without permission in writing from TOWE.

17 Measurement Uncertainty

Per KDB 865664 D01 SAR measurement 100MHz to 6GHz, when the highest measured 1-g SAR within a frequency band is < 1.5 W/kg and the measured 10-g SAR within a frequency band is < 3.75 W/kg. The expanded SAR measurement uncertainty must be ≤ 30%, for a confidence interval of k = 2. If these conditions are met, extensive SAR measurement uncertainty analysis described in IEEE Std 1528-2013 is not required in SAR reports submitted for equipment approval.

18 Calibration Certificate

Please see the Appendix C

19 Test Setup Photos

Please see the Appendix D

Appendix A: System Check Plots

Appendix B: SAR Test Plots

Appendix C: Calibration certificate

Appendix D: Test Setup Photos

--- The End ---

All rights reserved. Unless otherwise specified, no part of this report may be reproduced or utilized in any part, form or by any means, electronic or mechanical, including photocopying and microfilm, without permission in writing from TOWE.