JXM800RT12 HEAT TRANSFER PRINTER

(operating instruction)

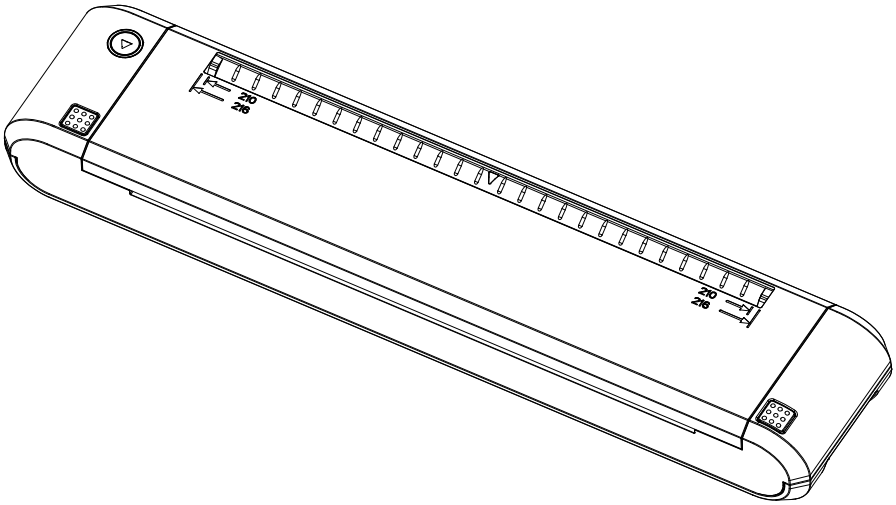

Formulate: Lin Chaoyi 20230827

Check: Huang Tianlong,

Wang Tiansong 20230827

Standardization: LI Xuebin 20230827

Approve: Jiang Wenbai 20230827

Tel：86-592-2626270 Fax：86-592-5692518
E-mail：master@jingxinst.com Web site：http://www.jingxinst.com
Address：Floor 2, No. 33-35 Huli Avenue, Huli District, Xiamen, Fujian, China

This instruction is subject to change without prior notice. Please contact Jingxin Technology for the latest version.

Revision record

NO.	Date	Page	Reference version	Revised version	Revised Content	Reviser

Catalogue

Chapter 1 Features and performance ..... - 4 -

1.1 Introduction ..... - 4 -

1.2 Print performance ..... - 4 -

1.3 Printer paper ..... - 5 -

1.4 Interface ..... - 5 -

Chapter 2 Guide to use ..... - 6 -

2.1 Appearance ..... - 6 -

2.2 Installation and use ..... - 7 -

2.3 Charging interface ..... - 8 -

2.4 Indicator light and button operation ..... - 9 -

2.4.1 Power switch ..... - 9 -

2.4.2 Feed button ..... - 9 -

2.4.3 Open button ..... - 9 -

2.4.4 Power indicator light ..... - 10 -

2.4.5 Buzzer ..... - 10 -

2.5 Self-detection ..... - 11 -

Chapter 3 Driver installation ..... - 11 -

3.1 PC driver ..... - 11 -

3.2 Mobile APP ..... - 11 -

Chapter 4 Precautions ..... - 13 -

Chapter 5 Quality Assurance and Maintenance ..... -14-

5. 1 Maintenance ..... - 14 -

5. 2 Warranty ..... - 14 -

Chapter 1 Features and performance

1.1 Introduction

JXM800RT12 HEAT TRANSFER PRINTER adopts thermal sensitive print head and print head control circuit of Jingxin Technology, built-in lithium battery, is a super small volume, super lightweight high-tech products, with reliable performance, beautiful appearance, simple operation and other advantages, a wide range of applications, adapting to ordinary printer paper and thermal paper, is the best mobile office partner for notebook computers and phones.

JXM800RT HEAT TRANSFER PRINTER uses USB interface to communicate with the host, and has Bluetooth, WIFI (reserved) data communication interface.

1.2 Print performance

- Printing mode: line thermal transfer printing / thermal sensitive printing.
- Print density: 11.8 dots /mm (300Dpi), 2592 dots/line.
- Printing speed: maximum printing speed is 10±1mm/s (coverage 12.5%, medium concentration).
- Effective print width: 216mm.
- Printing paper width: 210~216mm (recommended).
- Product Size: 315(L) X 67(W) X 45(H) mm.
- Battery: built-in 1200mAh lithium battery.
- Input voltage: 5.0V ⎓ 2A.
- Operating environment: 0 ~ 50℃ (temperature), 10 ~ 80% (humidity).
- Reliability:

  Print head life:50km.

  Conditions of use:

＊Print 12×24 characters and repeat intermittently.

＊No more than 25% of each dot line should be printed at the same time, and no more than 11 times should be repeated vertically at the same dot of each character line.

＊Use standard thermal sensitive paper.

＊Note： If consumers use power adapters for charging, should purchase power adapters that have CCC certification and meet the standard requirements.

1.3 Printer paper and Thermal transfer ribbon

- Type of paper:

a. A4 printer paper. (Consumables: thermal transfer ribbon, one ribbon available for printing over 70 papers, the ribbon is optional item.)

b. A4 thermal sensitive paper.

1.4 Interface

- USB Interface：

Standard Type-C USB interface, used for USB data communication and battery charging.

- Bluetooth interface:

The printer supports Bluetooth wireless data transmission interface. The dual-mode Bluetooth module that follows Bluetooth V5.0 standard protocol is compatible with Bluetooth It is a Bluetooth slave device and can only be driven by the main Bluetooth device (such as mobile phone, PAD, etc.). Other Bluetooth slave devices, such as Bluetooth headsets, cannot print through a Bluetooth driven printer.

The default device name for the printer is JXD800R12PXXXXX (which can be found on the printer label), and the Bluetooth connection defaults to simple pairing.

- WIFI interface (reserved):

The printer supports WIFI to work in STA mode, and the data transmission channel supports TCP-client. The default power-on mode is STA.

Chapter 2 Guide to use

2.1 Appearance

The appearance of the JXM800RT12 printer is showed in Fig.2-1; Fig.2-2.

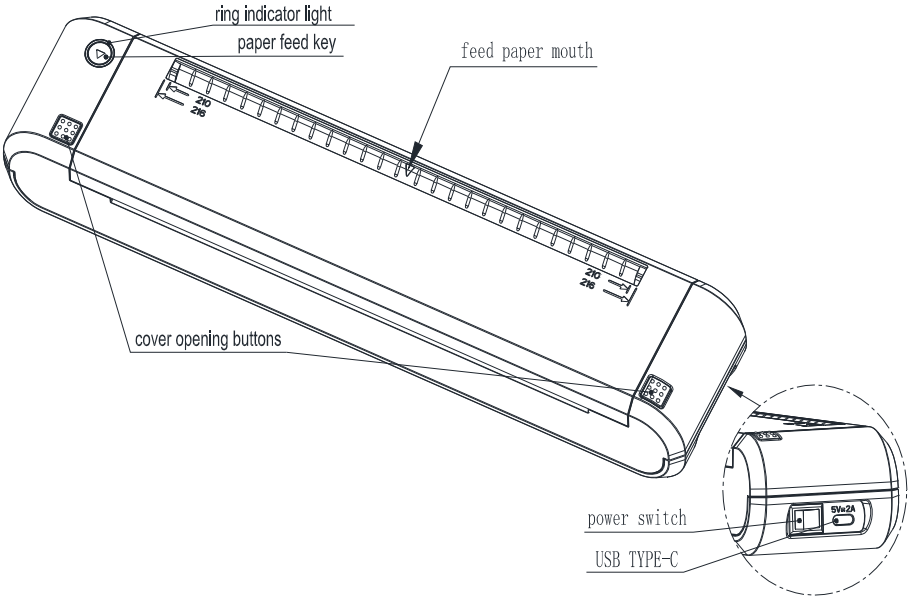

Fig.2-1 Appearance of the JXM800RT12

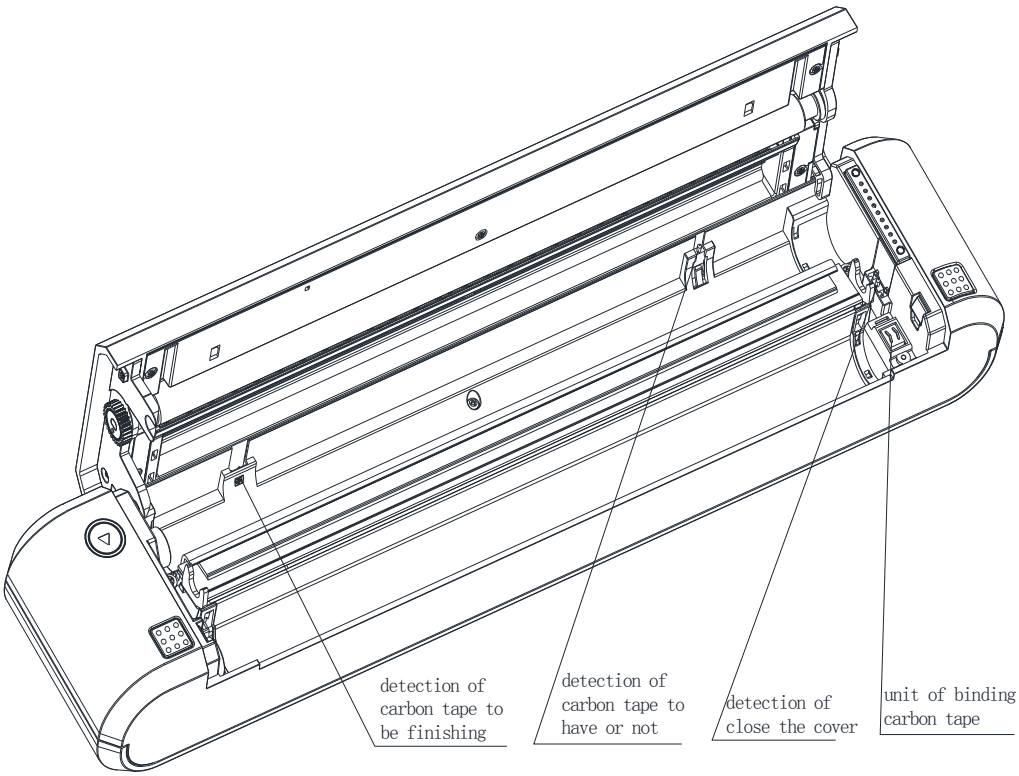

Fig.2-2 Appearance of the JXM800RT12

2.2 Installation and use

JXM800RT12 HEAT TRANSFER PRINTER is suitable for A4 ordinary printer paper (double-sided printing) and A4 thermal paper. Only one piece of paper can be placed at the same time.

Installation steps are as follows:

1. As shown in Fig 2-3, press the cover opening buttons on the left and right sides with both hands at the same time to open the flip cover model, and put the ribbon consumables into the machine. Note that the arrow mark of the consumables faces the paper exit side. Press the flip cover with both hands to close it (make sure the left and right sides are closed in place). You can see that the current indicator light is flashing green. As shown in Fig 2-4, according to the paper width mark at the paper inlet, directly put in a single piece of A4 printer paper (put it in place, you can see the green indicator light is always on), release the paper, and automatically detect the appropriate length of paper to be sucked in. Press the FEED key 【△】 to manually adjust the paper feed length.

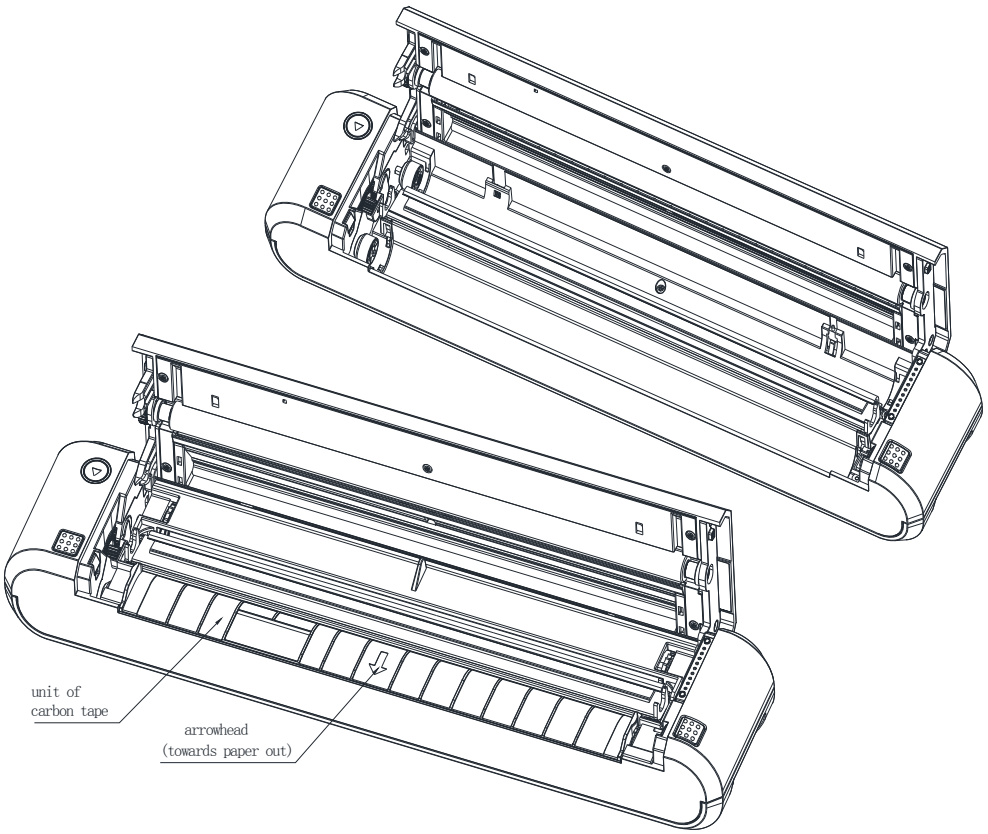

Fig.2-3

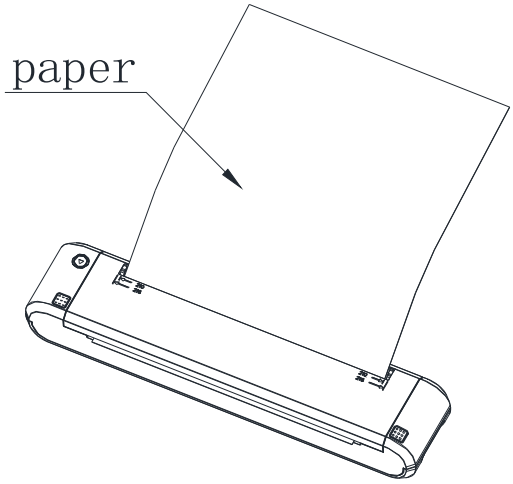

Fig.2-4

2. When there is no paper in the print head, please do not press 【△】 to avoid affecting the service life of the print head.

3. Do not manually pull the paper forward or stuff the paper backward after the flip cover is closed.

4. When using A4 thermal paper, do not place ribbon consumables. Refer to Figure 2-3 to install the paper.

2.3 Charging interface

JXM800RT12 printer uses the standard Type-C USB interface as shown in Fig.2-5, for data communication and charging. When charging, use DC5.0V ⎓ 2A power adapter with CCC certification.

Fig.2-5 USB interface

Note: If this product is used for the first time or left idle for a long time, it may be unable to start because of low battery, please charge it for at least half an hour before starting it!

2.4 Indicator light and button operation

2.4.1 Power switch

Controlling the switching state of the power supply. shows the closed state. Press“ - ”to turn on the power supply.

2.4.2 Feed button

【△】is the paper feed button，Press【△】key for printer feeding with fixed range, long press 【△】 key for continuously feeding paper to the end of the paper. (so that the paper can be removed without opening the cover)

2.4.3 Open button

Press the left and right cover opening buttons to open the flip cover model to clean the print head and handle other abnormalities. As shown in Fig 2-7, the ribbon consumables are taken out of the machine and the external fault is handled abnormally.

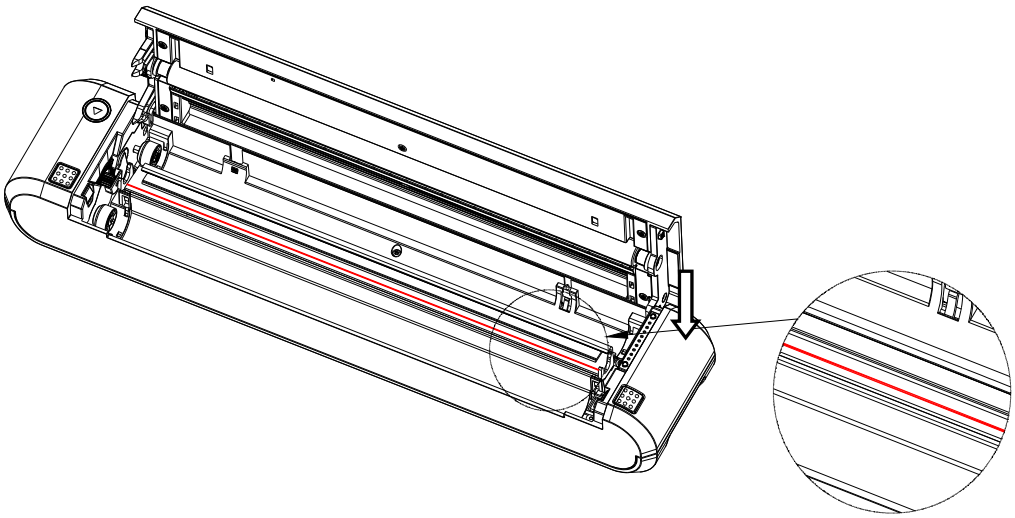

Fig.2-6

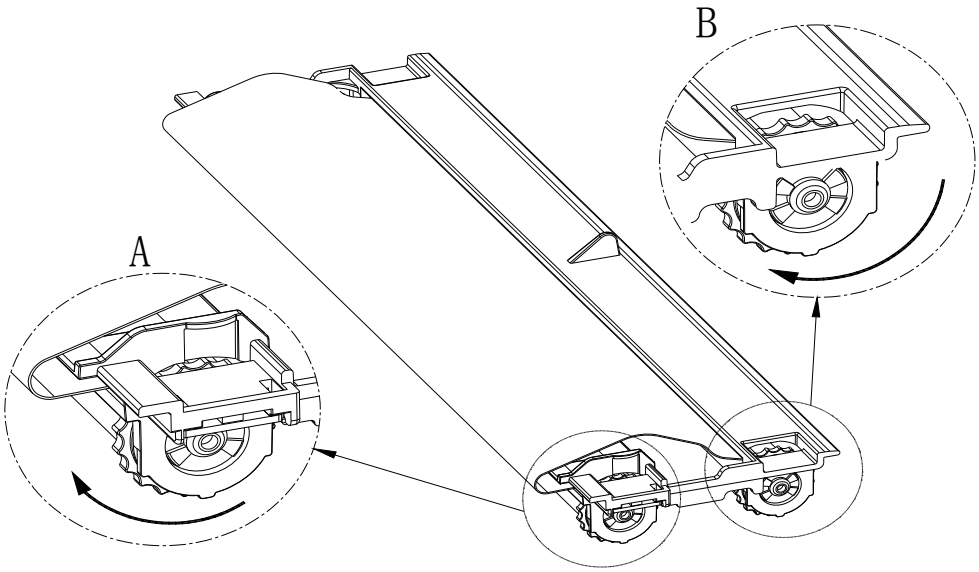

Fig.2-7

Due to a malfunction, the ribbon was rolled out of the machine along with the A4 copy paper during the printing process.

Please turn off the power switch and take out the consumables.

Turn the “A” side roller to rewind the scattered carbon ribbon;

Be careful to adjust “B” to recycle the consumed ribbon, otherwise it may result in poor first print results or an alarm.

2.4.4 Power indicator light

Status indicator

When the printer is powered on and the printer is in normal status (with paper and the cover is closed), the indicator light is solid green. When the printer is in an error state (out of paper or the cover is not closed), it flashes green slowly.

Charging indication: When charging, the indicator light is always red; when the battery is full, the red light goes out.

2.4.5 Buzzer

The buzzer is mainly used to indicate the real-time status of the printer. When the printer is powered on, the buzzer will sound once and then stop, indicating that the printer has been powered on normally.

The buzzer sounds at intervals, indicating that the consumable ribbon will be exhausted, and the machine will stop working. Please replace consumables.

2.5 Self-detection

Self-detection can detect whether the printer is working properly. If it can correctly print the self-check content (print the QR code downloaded by APP, scan the QR code by connecting the mobile phone), it means that in addition to the communication interface with the host, other parts of the printer work properly; Otherwise, maintenance is required.

Self-detection method: keep press the【△】key and switch on the power, and then release the【△】key, the printer will enter the Self-detection printing.

Chapter 3 Driver installation

3.1 PC driver

Download the PC driver of JXM800RT12 printer from our official website， access path is “Service Support ----- Data download-----Release170522”. The PC supports Win7/WIN10/WIN11(64bit). During the driver installation process, select “JXM800RT12” as the printer model. For other operations, see the PC driver installation manual of -JX Series thermal printer.

3.2 Mobile APP

Android/IOS: Scan the QR code of Fig.3-1 “JING PRINT” to download and install the APP (Note: shared by Android/IOS).

Fig.3-1 "JING PRINT"

FCC Statement

Any Changes or modifications not expressly approved by the party responsible for compliance could void the user's authority to operate the equipment.
This device complies with part 15 of the FCC Rules. Operation is subject to the following two conditions:
(1) This device may not cause harmful interference, and
(2) This device must accept any interference received, including interference that may cause undesired operation.

Note: This equipment has been tested and found to comply with the limits for a Class B digital device, pursuant to part 15 of the FCC Rules. These limits are designed to provide reasonable protection against harmful interference in a residential installation. This equipment generates, uses and can radiate radio frequency energy and, if not installed and used in accordance with the instructions, may cause harmful interference to radio communications. However, there is no guarantee that interference will not occur in a particular installation. If this equipment does cause harmful interference to radio or television reception, which can be determined by turning the equipment off and on, the user is encouraged to try to correct the interference by one or more of the following measures:
—Reorient or relocate the receiving antenna.
—Increase the separation between the equipment and receiver.
—Connect the equipment into an outlet on a circuit different from that to which the receiver is connected.
—Consult the dealer or an experienced radio/TV technician for help.

FCC Radiation Exposure Statement:

This equipment complies with FCC radiation exposure limits set forth for an uncontrolled environment .This equipment should be installed and operated with minimum distance 20cm between the radiator& your body. This transmitter must not be located or operating in conjunction with any other antenna or transmitter.

Chapter 4 Precautions

4.1 If there is smoke, abnormal smell, or abnormal noise, turn off the power immediately. Continued use may cause a fire. The plug should be unplugged immediately, and contact the seller or Jingxin customer service center to ask how to deal with it.

4.2 Do not attempt to repair the printer by yourself to avoid other faults.

4.3 Do not disassemble or correct by yourself. Avoid damage to the printer or cause fire.

4.4 Do not use the power supply that is not configured by the company to avoid faults.

4.5 Prevent foreign matter from being transferred into the printer to avoid fire.

4.6 If someone or other liquid flows into the machine, please immediately unplug the power cord and contact the seller or Jingxin customer service center to find a solution. Fire may occur if you continue to use the printer.

4.7 Do not use cables not provided by our company. Different connection methods may damage the printer.

4.8 Place the printer on a firm and stable level. Lest the machine be broken.

4.9 Do not use the printer in damp or dusty places.

4.10 If the printer is not used for a long time, please turn off the power of the unit.

Warning! This product is sold without a power adapter. If consumers use a power adapter for power supply, should purchase a power adapter that has CCC certification and meets the standard requirements. The output specification of the adapter should meet: 5.0V ⎓ 2A.

Statement

This is a class B product which may cause radio interference in the living environment. In this case, users may be required to take practical action a gainst their interference.

Chapter 5 Quality Assurance and Maintenance

The company guarantees that the product can play its superior performance under normal use and maintenance, and the company also provides a one-year warranty service.

5.1 Maintenance

If the machine does not work properly, please check your machine by following the steps below before contacting the maintenance center.

- The power supply is on, but the power indicator is off.

If the battery is dead, connect the external power adapter to check.

- Unable to print.

1) Whether the printing paper is properly installed and whether the front side of the paper is outside.
2) whether the driver is installed properly.
3) If the mobile APP cannot print, please confirm whether the Bluetooth interface is correctly connected.

In addition to the above simple maintenance, this product is prohibited by the user to repair, please do not change components without authorization, such as blind maintenance, caused by the printer cannot work normally is not within the scope of warranty, by the user to bear.

5.2 Warranty

Warranty period: the user from the company to buy the machine, spontaneous shipment date from the calculation, warranty period of one year; During the warranty period, the following conditions will not enjoy free service, the maintenance costs shall be borne by the user:

A. Printer damaged by user's improper operation.

B. Damage caused by customer's own maintenance and transformation.

C. Damage caused by non-conforming customer service conditions.

D. Damage caused by natural disasters.