ESPS3-32

Product Specification

2.4GHz Wi-Fi & BLE5.0 Coexistence Module

Version: 1.0 Date: Feb.08, 2025

Features

- General
  - Chip: ESP32-S3 Series
  - Module Size:18mm x 25.5mm x 3mm
  - Xtensa®dualCore32-bit. LX7 microprocessor 240MHz
  - 384KB ROM
  - 512K SRAM
  - 16 KB RTC SRAM
- Wi-Fi Features
  - IEEE 802.11 b/g/n-compliant
  - Center frequency range of operating channel: 2412 ~ 2484 MHz
  - 1T1R mode with data rate up to 150 Mbps
  - TX/RX A-MPDU, TX/RX A-MSDU
  - Immediate Block ACK
- Bluetooth Features
  - Bluetooth® 5 (LE) Bluetooth mesh
  - Speed: 125 Kbps, 500 Kbps, 1 Mbps, 2 Mbps
  - Advertising extensions
  - Multiple advertisement sets
  - Channel selection algorithm #2
  - Coexistence of Wi-Fi and Bluetooth
- Peripheral Interfaces
  - GPIO * 36;
  - I2C;
  - I2S;
  - SDIO;
  - TWAI (CAN 2.0);
  - SPI;
  - EN ;
  - MCPWM;
  - ADC;
  - LED PWM;
- Working Temperature: -40℃~85℃

Applications

- Serial transparent transmission;
- Wi-Fi prober;
- Smart power plug/Smart LED light/Smart home;
- Camera product;
- Sensor networks;
- Over-the-top (OTT) devices;
- Wireless location system beacon;
- Industrial field bus;

Module Type

Model	Flash	PSRAM	Antenna
ESPS3-32-N4	32M bit	-	PCB
ESPS3-32-N8	64M bit	-	PCB
ESPS3-32-N8R2	64M bit	16M bit	PCB
ESPS3-32-N16R2	128M bit	16M bit	PCB
ESPS3-32-N16R8	128M bit	64M bit	PCB

Module Structure

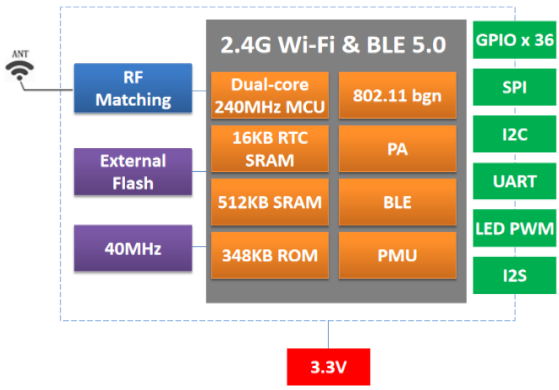

Doctors of Intelligence & Technology 严禁复制

Update Record

Date	Version	Update
2025-02-28	V1.0	First released

Table of Contents

1. Introduction 4

2. Interface Definition 6

3. Size and Layout 9

4. Electronica Characteristics 11

5. Power Consumption 11

6. Wi-Fi RF Characteristics 12

7. Bluetooth LE Radio 13

8. Recommended Sold Temperature Curve 14

9. Minimum User System 14

10. Recommended Layout Design 15

11. Peripheral Design Suggestion 16

12. Product Handling 16

13. Packing Instruction 17

1. Introduction

ESPS3-32 Wi-Fi and BLE coexistence Module is a highly integrated single-chip low power 802.11b/g/n Wireless LAN (WLAN) network controller. It combines a dual-core 240MHz CPU, WLAN MAC, a 1T1R capable WLAN baseband, RF, and Bluetooth in a single chip. It also provides a bunch of configurable GPIO, which are configured as digital peripherals for different applications and control usage.

ESPS3-32 integrates rich peripherals, including SPI, parallel IO, ADC,UART, I2C, I2S, RMT (TX/RX), LED pulse width modulation, USB2.0 serial port, JTAG controller, MCPWM, SDIO slave controller, GDMA, Twai ®controller, on-chip JTAG debugging function, event task matrix. And up to 36 GPIO and so on.

ESPS3-32 module use ESPS3-32 as Wi-Fi and BLE coexistence SOC chip.

ESPS3-32 module integrates internal memories for complete Wi-Fi protocol functions. The embedded memory configuration also provides convenient application developments.

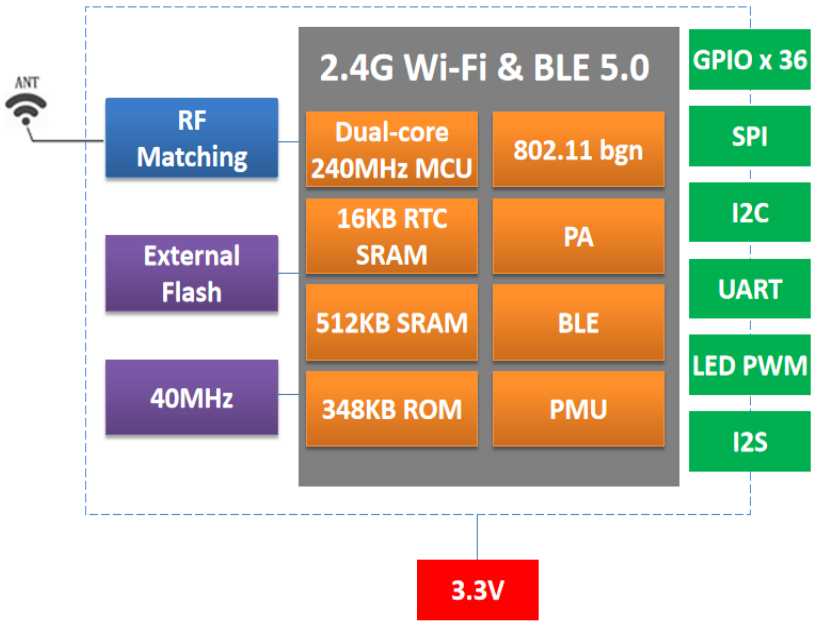

Fig.1.1 ESPS3-32 Module Structure

Technical parameters for ESPS3-32 are listed as follows.

Table.1.1 ESPS3-32 Parameters

Type	Item	Parameter
Wi-Fi	Frequency	2.4G~2.5G (2412M~2484M)
	Transmit power	802.11b: +27 dBm
		802.11g: +28 dBm
		802.11n: +27 dBm
	Receiver sensitivity	802.11b: -88 dBm (11Mbps)
		802.11g: -76 dBm（54Mbps）
		802.11n: -74 dBm（MCS7, HT20）
		802.11n: -71 dBm（MCS7, HT40）
	EVM	-24dB @802.11b,11Mbps @19dBm
		-27dB @802.11g,54Mbps @17dBm
		-29dB @802.11n,HT20,MCS7 @15dBm
		-29dB @802.11n,HT40,MCS7 @15dBm
	Antenna	PCB
BLE	RF power control range	-2.0~1.0dBm （2402 ~ 2480 MHz）
Hardware	CPU	Xtensa®dualCore32-bit.LX7microprocessor 240MHz
	Interface	UART/SDIO/SPI/I2C/GPIO
	Working voltage	3.0V ~ 3.6V(Standard 3.3V)
	Working temperature	-40°C ~ 85°C
	Environment temperature	-40°C ~ 105°C
	Shape	18mm x 25.5mm x 3mm
Software	Wi-Fi working mode	STA, Soft-AP and sniffer modes
	Security mode	WPS / WEP / WPA / WPA2 / WPA3
	Update firmware	UART Download/USB Download
	Software develop	SDK
	Network protocol	IPv4, TCP/UDP/HTTP/FTP/MQTT

Doctors of Intelligence & Technology

2. Interface Definition

ESPS3-32 Wi-Fi & BLE module interface definition is shown as below。

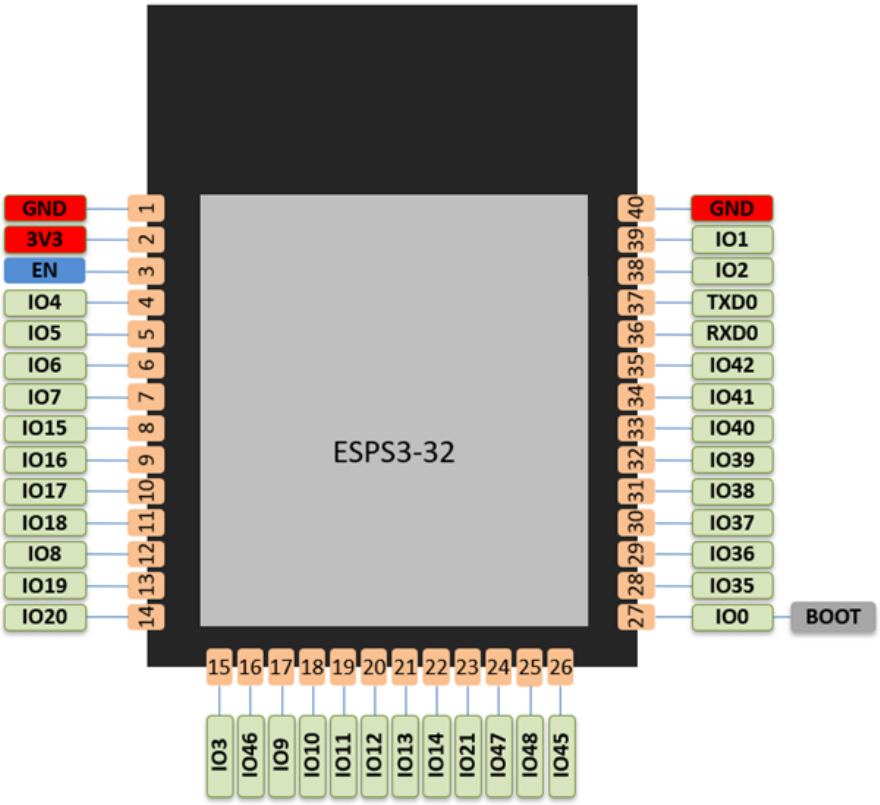

Fig.2.1 ESPS3-32 Pins Definition（Top view）

Working modes and pins function is shown in Table 2.1.

Table.2.1Working Mode

Mode	IO0 Voltage Level
UART Download Mode	LOW
Flash Boot Mode	HIGH (Default)

Table.2.2 Pins Function Definition

Num.	Pin Name	Type	Function
1	GND	P	Ground

2	3V3	P	Power supply
3	EN	I	Chip enable; Internal Pull-up. HIGH: enable the chip.
4	IO4	I/O	RTC_GPIO4, GPIO4, TOUCH4, ADC1_CH3
5	IO5	I/O	RTC_GPIO5, GPIO5, TOUCH5, ADC1_CH4
6	IO6	I/O	RTC_GPIO6, GPIO6, TOUCH6, ADC1_CH5
7	IO7	I/O	MTDO, GPIO7, LP_GPIO7, LP_I2C_SCL, FSPID
8	IO15	I/O	RTC_GPIO15, GPIO15, U0RTS, ADC2_CH4, XTAL_32K_P
9	IO16	I/O	RTC_GPIO16, GPIO16, U0CTS, ADC2_CH5, XTAL_32K_N
10	IO17	I/O	RTC_GPIO17, GPIO17, U1TXD, ADC2_CH6
11	IO18	I/O	RTC_GPIO18, GPIO18, U1RXD, ADC2_CH7, CLK_OUT3
12	IO8	I/O	RTC_GPIO8, GPIO8, TOUCH8, ADC1_CH7, SUBSPICS1
13	IO19	I/O	RTC_GPIO19, GPIO19, U1RTS, ADC2_CH8, CLK_OUT2, USB_D-
14	IO20	I/O	RTC_GPIO20, GPIO20, U1CTS, ADC2_CH9, CLK_OUT1, USB_D+
15	IO3	I/O	RTC_GPIO3, GPIO3, TOUCH3, ADC1_CH2
16	IO46	I/O	GPIO46
17	IO9	I/O	RTC_GPIO9, GPIO9, TOUCH9, ADC1_CH8, FSPIHD, SUBSPIHD
18	IO10	I/O	RTC_GPIO10, GPIO10, TOUCH10, ADC1_CH9, FSPICS0, FSPIIO4, SUBSPICS0
19	IO11	I/O	RTC_GPIO11, GPIO11, TOUCH11, ADC2_CH0, FSPID, FSPIIO5, SUBSPID
20	IO12	I/O	RTC_GPIO12, GPIO12, TOUCH12, ADC2_CH1, FSPICLK, FSPIIO6, SUBSPICLK
21	IO13	I/O	RTC_GPIO13, GPIO13, TOUCH13, ADC2_CH2, FSPIQ, FSPIIO7, SUBSPIQ
22	IO14	I/O	RTC_GPIO14, GPIO14, TOUCH14, ADC2_CH3, FSPIWP, FSPIDQS, SUBSPIWP
23	IO21	I/O	RTC_GPIO21, GPIO21
24	IO47	I/O	SPICLK_P_DIFF, GPIO47, SUBSPICLK_P_DIFF

Doctors of Intelligence & Technology

25	IO48	I/O	SPICLK_N_DIFF, GPIO48, SUBSPICLK_N_DIFF
26	IO45	I/O	GPI45
27	IO0	I/O	RTC_GPIO0, GPIO0
28	IO35	I/O	SPIIO6, GPIO35, FSPID, SUBSPID
29	IO36	I/O	SPIIO7, GPIO36, FSPICLK, SUBSPICLK
30	IO37	I/O	SPIDQS, GPIO37, FSPIQ, SUBSPIQ
31	IO38	I/O	GPIO38, FSPIWP, SUBSPIWP
32	IO39	I/O	MTCK, GPIO39, CLK_OUT3, SUBSPICS1
33	IO40	I/O	MTDO, GPIO40, CLK_OUT2
34	IO41	I/O	MTDI, GPIO41, CLK_OUT1
35	IO42	I/O	MTMS, GPIO42
36	RXD0	I/O	U0RXD, GPIO44, CLK_OUT2
37	TXD0	I/O	U0TXD, GPIO43, CLK_OUT1
38	IO2	I/O	RTC_GPIO2, GPIO2, TOUCH2, ADC1_CH1
39	IO1	I/O	RTC_GPIO1, GPIO1, TOUCH1, ADC1_CH0
40	GND	P	Ground
41	EPAD	P	Ground

Doctors of Intelligence & Technology

3. Size and Layout

Size for ESPS3-32 can be shown as follows.

Fig.3.1 Shape for ESPS3-32 (Model in pic is ESPS3-32-N4)

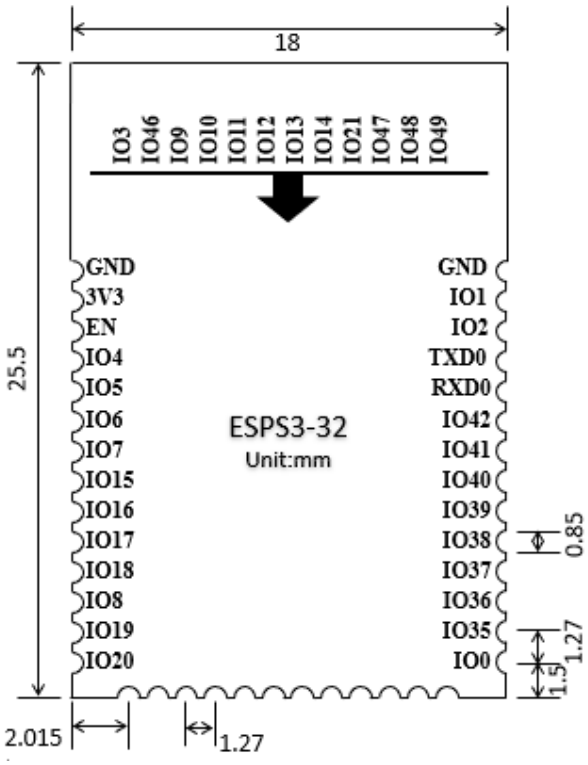

(a) （Top view）

(b) Side View

Fig.3.2 Size forESPS3-32

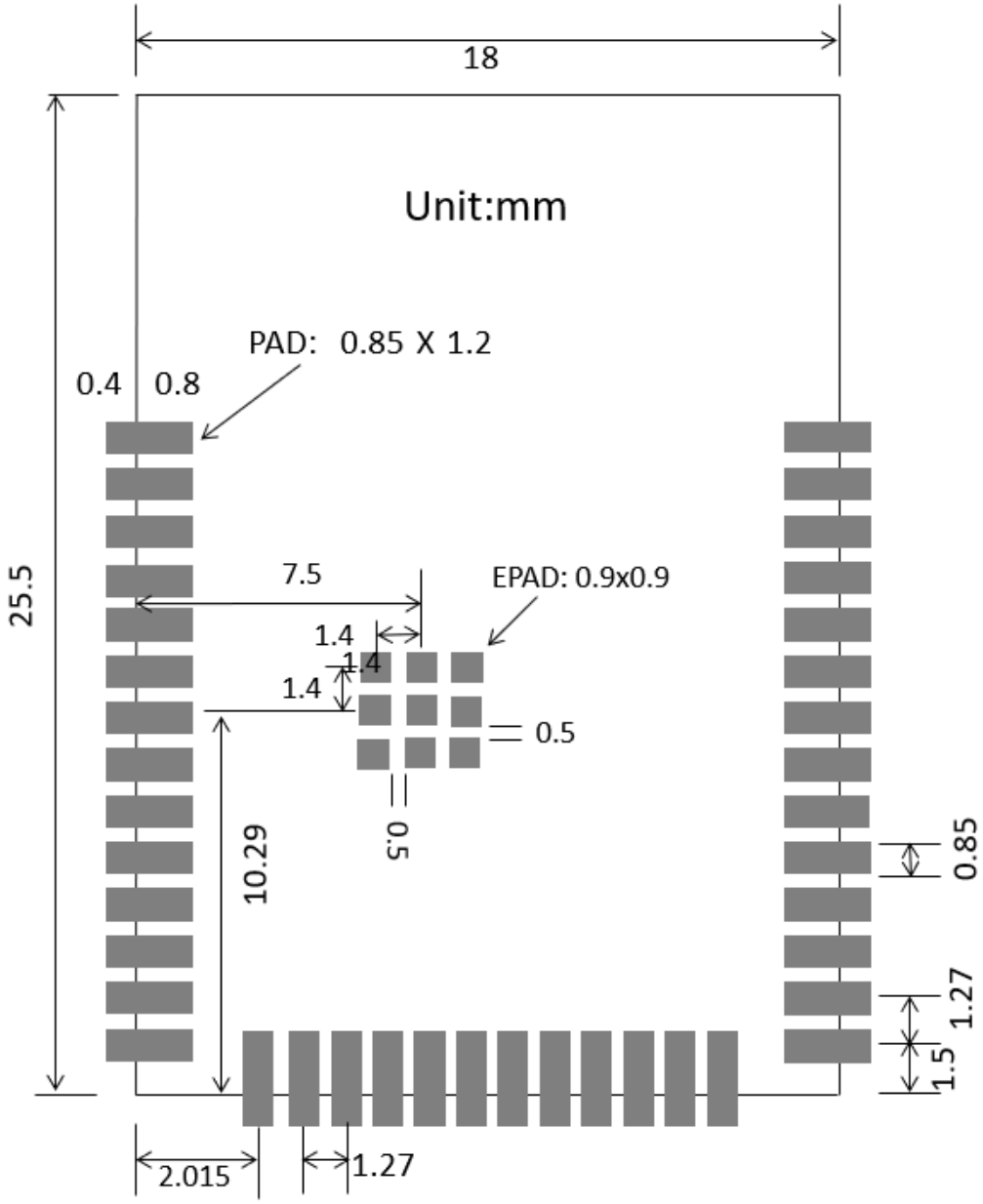

Fig. 3.3 PCB Layout for ESPS3-32（Top view）

4. Electronica Characteristics

Table.4.1 Electronica Characteristics

Parameters		Condition	Min	Classical	Max	Unit
Store Temperature		-	-40	Normal	105	℃
Sold Temperature		IPC/JEDEC J-STD-020	-	-	260	℃
Working Voltage		-	3.0	3.3	3.6	V
I/O	V_{IL}	-	-0.3	-	0.25*VDD	V
	V_{IH}	-	0.75*VDD	-	VDD+0.3	
	V_{OL}	-	-	-	0.1*VDD	
	V_{OH}	-	0.8*VDD	-	-	
Electrostatic Release Quantity (Human model)		TAMB=25℃	-	-	2	KV
Electrostatic Release Quantity (Machine model)		TAMB=25℃	-	-	0.5	KV

5. Power Consumption

Table.5.1 Power Consumption

Parameters	Min	Classical	Max	Unit
RX 11n, HT20	-	-	88	mA
RX 11n, HT40	-	-	91	mA
TX 11b, 11Mbps @19dBm	-	-	326	mA
TX 11g, 54Mbps @17dBm	-	-	270	mA
TX 11n, HT20, MCS7, @15dBm	-	-	256	mA
TX 11n, HT40, MCS7, @15dBm	-	-	260	mA
Modem-sleep, CPU is powered on @40MHz	-	18	-	mA
Light-sleep	-	240	-	uA
Deep-sleep, RTC timer + RTC memory	-	7	-	uA
Power off, CHIP_PU is set to low level	-	1	-	uA

The peak current consumption of ESPS3-32 exceed 500mA when the module start work (RF calibration work consumes maximum current). Therefore, the recommended power supply is no less than 500mA.

Note:

1. Active Mode: CPU and RF are all turned on.

2. Modem-sleep Mode: CPU is turned on. RF and baseband are turned off, but the communication is still connected.

3. Light-sleep Mode: CPU is turned off. RTC/external interrupt/MAC can wake up the chip. The communication is still connected.

4. Deep-sleep Mode: Only RTC is turned on.

6. Wi-Fi RF Characteristics

The data in the following table is gotten when voltage is 3.3V in the indoor temperature environment.

Table.6.1 Wi-Fi TX Characteristics

Parameters	Min	Classical	Max	Unit
Input frequency	2412	-	2484	MHz
802.11b	-	19	-	dBm
802.11g,54Mbps	-	17		dBm
802.11n,MCS7	-	15	-	dBm

Table.6.2 Wi-Fi RX Sensitivity

Parameters	Min	Classical	Max	Unit
802.11b,1Mbps	-	-98	-	dBm
802.11b,11Mbps	-	-88	-	dBm
802.11g,6Mbps	-	-94	-	dBm
802.11g,54Mbps	-	-76	-	dBm
802.11n,HT20,MCS0	-	-93	-	dBm
802.11n,HT20,MCS7	-	-74	-	dBm

Doctors of Intelligence & Technology

802.11n,HT40,MCS0	-	-90	-	dBm
802.11n,HT40,MCS7	-	-71	-	dBm

Table.6.3 Wi-Fi RX Characteristics

Parameters	Min	Classical	Max	Unit
ADJ Channel Rejection @11b, 1Mbps	-	35	-	dB
ADJ Channel Rejection @11b, 11Mbps	-	35	-	dB
ADJ Channel Rejection @11g, 6Mbps	-	31	-	dB
ADJ Channel Rejection @11g, 54Mbps	-	14	-	dB
ADJ Channel Rejection @11n,HT20,MCS0	-	31	-	dB
ADJ Channel Rejection @11n,HT20,MCS7	-	13	-	dB
ADJ Channel Rejection @11n,HT40,MCS0	-	19	-	dB
ADJ Channel Rejection @11n,HT40,MCS7	-	8	-	dB

7. Bluetooth LE Radio

Table.7.1 TX Transmitter General Characteristics（Bluetooth Radio 2402 ~ 2480 MHz）

Parameters	Min	Classical	Max	Unit
RF power control range	-24	4	10	dBm
ADJ channel Transmit Power @F-F0±2MHz	-	-37	-	dBm
ADJ channel Transmit Power @F-F0±3MHz	-	-42	-	dBm
ADJ channel Transmit Power @F-F0±>3MHz	-	-44	-	kHz
△f1avg	-	-	213	kHz
△f2max	196	-	-	kHz
ICFT	-	-10	-	kHz

Table.7.2 RX Transmitter General Characteristics（Bluetooth Radio 2402 ~ 2480 MHz）

Parameters		Min	Classical	Max	Unit
BLE	Sensitivity @30.8% PER	-92	-	-103	dBm
	Maximum received signal @30.8% PER	0	-	-	dBm

	Co-channel C/I	-	8	-	dB

8. Recommended Sold Temperature Curve

(1) Reflow Times <= 2 times (Max.)

(2) Max Rising Slope: 3℃/sec

(3) Max Falling Slope: -3℃/sec

(4) Over 217℃ Time: 60~120sec

(5) Peak Temp:240℃~250℃

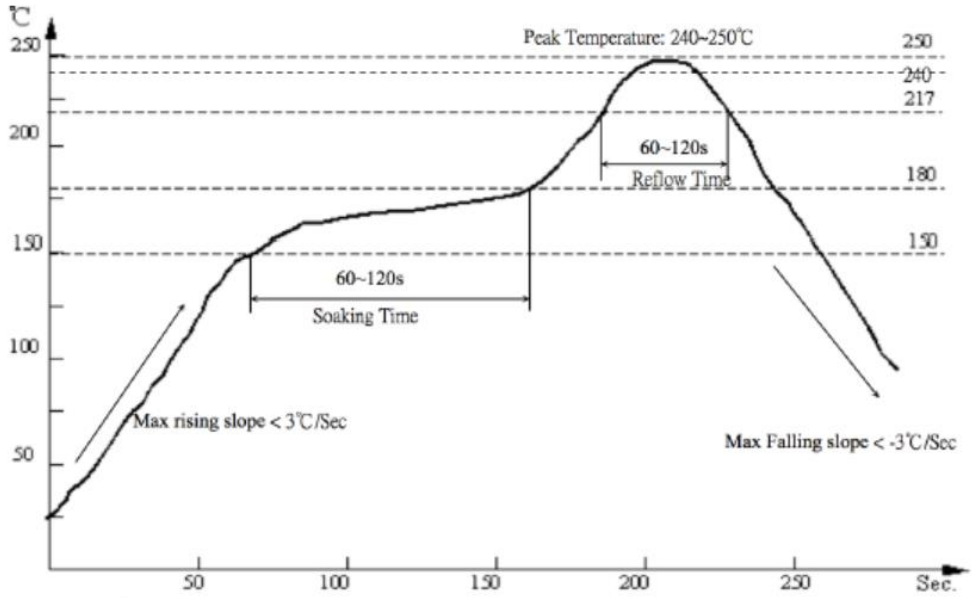

Fig.8.1 Recommended Reflow Profile

9. Minimum User System

This module can work just at 3.3V voltage condition:

Note:

(1) The working voltage for module is DC 3.3V;

(2) The max current from IO of this module is 40mA;

(3) Wi-Fi module is at download mode: IO0 is LOW level, then module reset to power;

(4) Wi-Fi module is connected to RXD of the other MCU, and TXD is connected to RXD of the other MCU.

10. Recommended Layout Design

ESPS3-32 module can be sold on PCB board directly. For the high RF performance for the device, please notice the placement of the module. There are three ways to use the module for Wi-Fi Module with PCB antenna.

Solution 1: optical solution. The Wi-Fi module is placed on the side of the board, and the antennas are all exposed, and there is no metal material around the antenna, including wires, metal casings, weight plates, and the like.

Solution 2: sub-optical solution. The Wi-Fi module is placed on the side of the board, and the antenna below is hollowed out. There is a gap of not less than 5 mm reserved with the PCB, and there is no metal material around the antenna, including wires, metal casings, weight plates, and the like.

Solution 3: The Wi-Fi module is placed on the side of the board, and the PCB area under the antenna is empty, and copper cannot be laid.

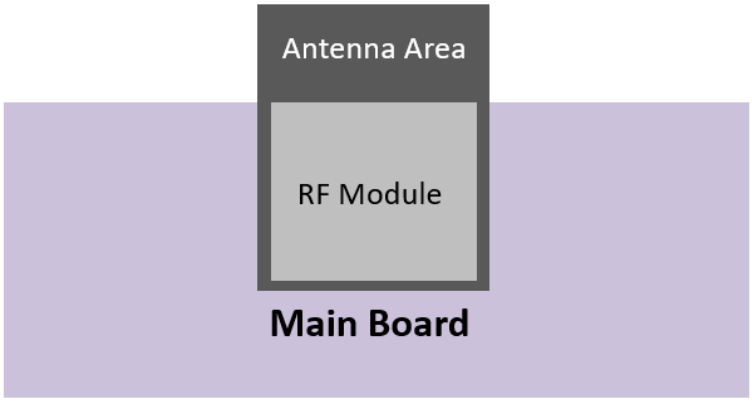

Fig.10.1 Solution 1

Doctors of Intelligence & Technology

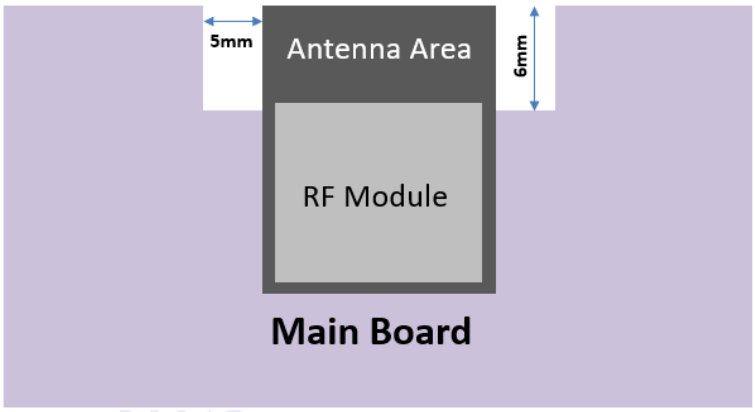

Fig.10.2 Solution 2

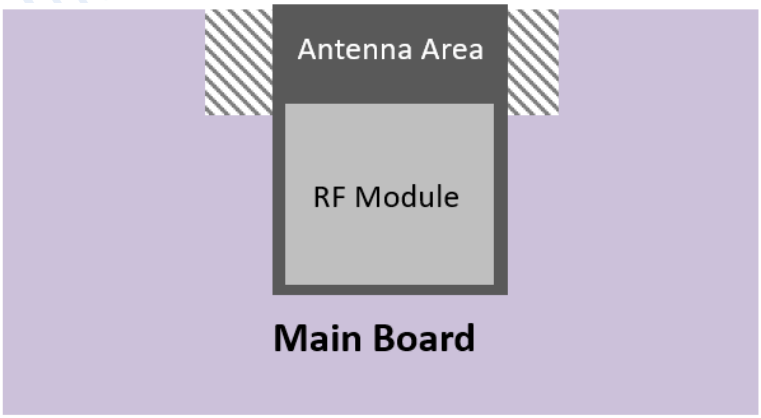

Fig.10.3 Solution 3

11. Peripheral Design Suggestion

Wi-Fi module is already integrated into high-speed GPIO and Peripheral interface, which may be generated the switch noise. If there is a high request for the power consumption and EMI characteristics, it is suggested to connect a serial 10~100 ohm resistance, which can suppress overshoot when switching power supply, and can smooth signal. At the same time, it also can prevent electrostatic discharge (ESD).

12. Product Handling

12.1 Storage Conditions

The products sealed in moisture barrier bags (MBB) should be stored in a non-condensing atmospheric environment of < 40 °C and 90%RH. The module is rated at the moisture sensitivity level (MSL) of 3. After unpacking, the module must be soldered within 168 hours with the factory conditions 25±5 °C and 60%RH. If the above conditions are not met, the module needs to be baked.

12.2 Electrostatic Discharge (ESD)

• Human body model (HBM): ±2000 V

• Charged-device model (CDM): ±500 V

13. Packing Instruction

The product is packed in a tray, as shown in the following figure.

The size of the single box is: 340 x 360 x 60mm, and 650 pieces module is in the box. And the outer box size is 355 x 375 x 325mm, including 5 single box which include 3250 pieces module.

Fig.13.1 Module Package

Doctors of Intelligence & Technology

FCC Statement

This device complies with part 15 of the FCC rules. Operation is subject to the following two conditions: (1) this device may not cause harmful interference, and (2) this device must accept any interference received, including interference that may cause undesired operation.

Changes or modifications not expressly approved by the party responsible for compliance could void the user' s authority to operate the equipment.

NOTE: This equipment has been tested and found to comply with the limits for a Class B digital device, pursua nt to part 15 of the FCC Rules. These limits are designed to provide reasonable protection against harmful inte rference in a residential installation. This equipment generates uses and can radiate radio frequency energy a nd, if not installed and used in accordance with the instructions, may cause harmful interference to radio com munications. However, there is no guarantee that interference will not occur in a particular installation. If this equipment does cause harmful interference to radio or television reception, which can be determined by turn ing the equipment off and on, the user is encouraged to try to correct the interference by one or more of the following measures:

- Reorient or relocate the receiving antenna.
- Increase the separation between the equipment and receiver.
- Connect the equipment into an outlet on a circuit different from that to which the receiver is connected.
- Consult the dealer or an experienced radio/TV technician for help important announcement

Important Note:

Radiation Exposure Statement

This equipment complies with FCC radiation exposure limits set forth for an uncontrolled environment. This equipment should be installed and operated with minimum distance 20cm between the radiator and your body.

This transmitter must not be co-located or operating in conjunction with any other antenna or transmitter.

Country Code selection feature to be disabled for products marketed to the US/Canada.

This device is intended only for OEM integrators under the following conditions:

1. The antenna must be installed such that 20 cm is maintained between the antenna and users, and
2. The transmitter module may not be co-located with any other transmitter or antenna,
3. For all products market in US, OEM has to limit the operation channels in CH1 to CH11 for 2.4G band by supplied firmware programming tool. OEM shall not supply any tool or info to the end-user regarding to Regulatory Domain change. (if modular only test Channel 1-11)

As long as the three conditions above are met, further transmitter testing will not be required. However, the OEM integrator is still responsible for testing their end-product for any additional compliance requirements required with this module installed.

Important Note:

In the event that these conditions cannot be met (for example certain laptop configurations or co-location with another transmitter), then the FCC authorization is no longer considered valid and the FCC ID cannot be used on the final product. In these circumstances, the OEM integrator will be responsible for re-evaluating the end product (including the transmitter) and obtaining a separate FCC authorization.

End Product Labeling

The final end product must be labeled in a visible area with the following"

Contains FCC ID: **2BB77-ESPS3-32** "

Manual Information to the End User

The OEM integrator has to be aware not to provide information to the end user regarding how to install or remove this RF module in the user's manual of the end product which integrates this module.

The end user manual shall include all required regulatory information/warning as show in this manual.

Integration instructions for host product manufacturers according to KDB 996369 D03 OEM Manual v01r01

2.2 List of applicable FCC rules

CFR 47 FCC PART 15 SUBPART C has been investigated. It is applicable to the modular transmitter

2.3 Specific operational use conditions

This module is stand-alone modular. If the end product will involve the Multiple simultaneously transmitting condition or different operational conditions for a stand-alone modular transmitter in a host, host manufacturer have to consult with module manufacturer for the installation method in end system.

2.4 Limited module procedures

Not applicable

2.5 Trace antenna designs

Not applicable

2.6 RF exposure considerations

This equipment complies with FCC radiation exposure limits set forth for an uncontrolled environment. This equipment should be installed and operated with minimum distance 20cm between the radiator & your body.

2.7 Antennas

This radio transmitter **FCC ID: 2BB77-ESPS3-32** has been approved by Federal Communications Commission to operate with the antenna types listed below, with the maximum permissible gain indicated. Antenna types not included in this list that have a gain greater than the maximum gain indicated for any type listed are strictly prohibited for use with this device.

Antenna No.	Model No. of antenna:	Type of antenna:	Gain of the antenna (Max.)	Frequency range:
BLE/2.4GWIFI	/	PCB Antenna	3.57 dBi	2400-2500MHz

2.8 Label and compliance information

The final end product must be labeled in a visible area with the following" Contains **FCC ID: 2BB77-ESPS3-32** ".

2.9 Information on test modes and additional testing requirements

Host manufacturer is strongly recommended to confirm compliance with FCC requirements for the transmitter when the module is installed in the host.

2.10 Additional testing, Part 15 Subpart B disclaimer

Host manufacturer is responsible for compliance of the host system with module installed with all other applicable requirements for the system such as Part 15 B.

2.11 Note EMI Considerations

Host manufacture is recommended to use D04 Module Integration Guide recommending as "best practice" RF design engineering testing and evaluation in case non-linear interactions generate additional non-compliant limits due to module placement to host components or properties.

2.12 How to make changes

This module is stand-alone modular. If the end product will involve the Multiple simultaneously transmitting condition or different operational conditions for a stand-alone modular transmitter in a host, host manufacturer have to consult with module manufacturer for the installation method in end system. According to the KDB 996369 D02 Q&A Q12, that a host manufacture only needs to do an evaluation (i.e., no C2PC required when no emission exceeds the limit of any individual device (including unintentional radiators) as a composite. The host manufacturer must fix any failure.