ESP-WROOM-32UE

Product Specification

——2.4GHz Wi-Fi and BLE4.2 Coexistence Module

Version: 1.0 Date: July.20, 2022

Features

- **General**
  - Chip: ESP32-D0WD-V3
  - Module Size:18mm x 19.2mm x 3mm
  - Dual-Core 240MHz MCU
  - 4MByte embedded flash(default)
  - 448KB ROM
  - 520KB SRAM+16KB RTC SRAM
- **Wi-Fi Features**
  - IEEE 802.11 b/g/n-compliant
  - Center frequency range of operating channel: 2412 ~ 2484 MHz
  - 1T1R mode with data rate up to 150 Mbps
  - TX/RX A-MPDU, TX/RX A-MSDU
  - Immediate Block ACK
- **Bluetooth Features**
  - Bluetooth LE: Bluetooth 4.2
  - Speed: 125 Kbps, 500 Kbps, 1 Mbps, 2 Mbps
  - Advertising extensions
  - Multiple advertisement sets
  - Channel selection algorithm #2
- **Peripheral Interfaces**
  - GPIO * 32;
  - IIC + IIS;
  - SDIO;
  - TWAI (CAN 2.0);
  - SPI;
  - EN ;
  - MCPWM;
  - ADC;
  - LED PWM;
- **Working Temperature:** -40℃-85℃

Applications

- Serial transparent transmission;
- Wi-Fi prober;
- Smart power plug/Smart LED light;
- Camera product;
- Sensor networks;
- Over-the-top (OTT) devices;
- Wireless location system beacon;
- Industrial field bus;

Module Type

Name	Flash	Antenna
ESP-WROOM-32UE-N4	32M bit	U.FL
ESP-WROOM-32UE-N8	64M bit	U.FL
ESP-WROOM-32UE-N16	128M bit	U.FL

Module Structure

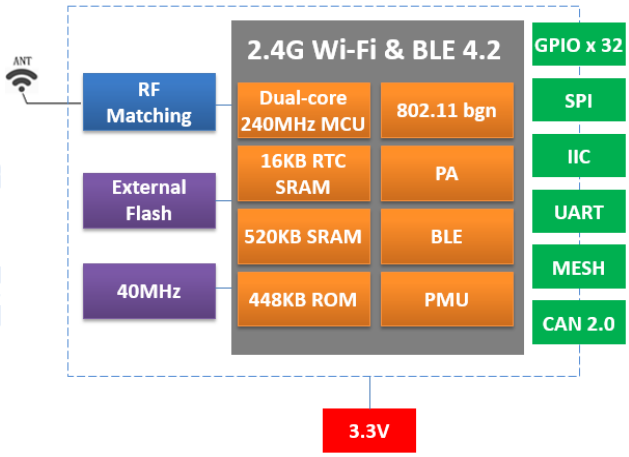

Doctors of Intelligence & Technology 严禁复制

Update Record

Date	Version	Update
2022-07-20	V1.0	First released

Table of Contents

1. Introduction 4

2. Interface Definition 6

3. Size and Layout 9

4. Electronica Characteristics 10

5. Power Consumption 11

6. Wi-Fi RF Characteristics 11

7. Bluetooth LE Radio 12

8. Recommended Sold Temperature Curve 13

9. Minimum User System 13

10. Recommended Layout Design 14

11. Peripheral Design Suggestion 15

12. Product Handling 15

13. U.F.L RF Connector 16

14. Packing Instruction 16

Appendix: Module Schematic 18

1. Introduction

ESP-WROOM-32UE Wi-Fi and BLE coexistence Module is a highly integrated single-chip low power 802.11bgn Wireless LAN (WLAN) network controller. It combines a dual-core 240MHz CPU, WLAN MAC, a 1T1R capable WLAN baseband, RF, and Bluetooth in a single chip. It also provides a bunch of configurable GPIO, which are configured as digital peripherals for different applications and control usage.

ESP-WROOM-32UE module use ESP32-D0WD-V3 as Wi-Fi and BLE coexistence SOC chip.

ESP-WROOM-32UE module integrates internal memories for complete Wi-Fi protocol functions. The embedded memory configuration also provides convenient application developments.

ESP-WROOM-32UE module supports the standard IEEE802.11 b/g/n/e/i protocol and the complete TCP/IP protocol stack. User can use it to add the Wi-Fi function for the installed devices, and also can be viewed as an independent network controller.

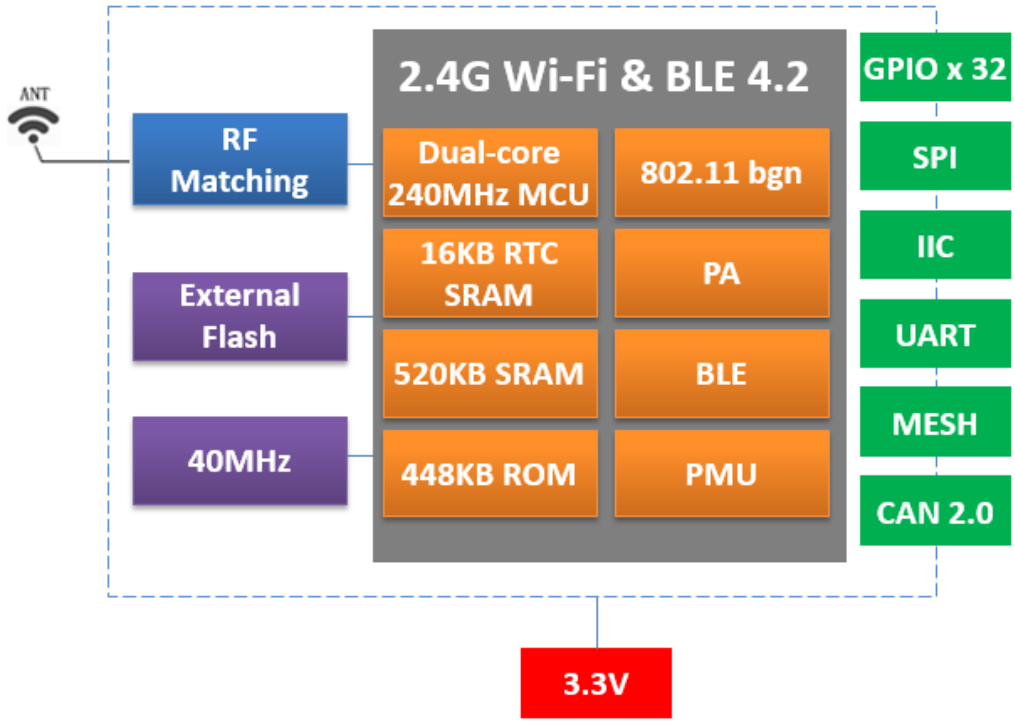

Fig.1.1 ESP-WROOM-32UE Module Structure

Technical parameters for ESP-WROOM-32UE are listed as follows.

Table.1.1 ESP-WROOM-32UE Parameters

Type	Item	Parameter
Wi-Fi	Frequency	2.4G~2.5G (2412M~2484M)
	Transmit power	802.11b: +17 dBm
		802.11g: +21 dBm
		802.11n: +20 dBm
	Receiver sensitivity	802.11b: -98 dBm (11Mbps)
		802.11g: -75 dBm（54Mbps）
		802.11n: -73 dBm（MCS7, HT20）
		802.11n: -70 dBm（MCS7, HT40）
	EVM	-26dB @802.11b,11Mbps @20dBm
		-28dB @802.11g,54Mbps @15dBm
		-30dB @802.11n,HT20,MCS7 @13dBm
		-30dB @802.11n,HT40,MCS7 @13dBm
	Antenna	U.FL
BLE	RF power control range	-12~9dBm
Hardware	CPU	Xtensa dual-core 240MHz
	Interface	/UART/SDIO/SPI/I2C/GPIO
	Working voltage	3.0V ~ 3.6V
	Working temperature	-40°C ~ 85°C
	Environment temperature	-40°C ~ 105°C
	Shape	18mm x 19.2mm x 3mm
Software	Wi-Fi working mode	STA, Soft-AP and sniffer modes
	Security mode	WPS / WEP / WPA / WPA2 / WPA3
	Update firmware	UART Download
	Software develop	SDK
	Network protocol	IPv4, TCP/UDP/HTTP/FTP/MQTT

Doctors of Intelligence & Technology 严禁复制

2. Interface Definition

ESP-WROOM-32UE Wi-Fi & BLE module interface definition is shown as below。

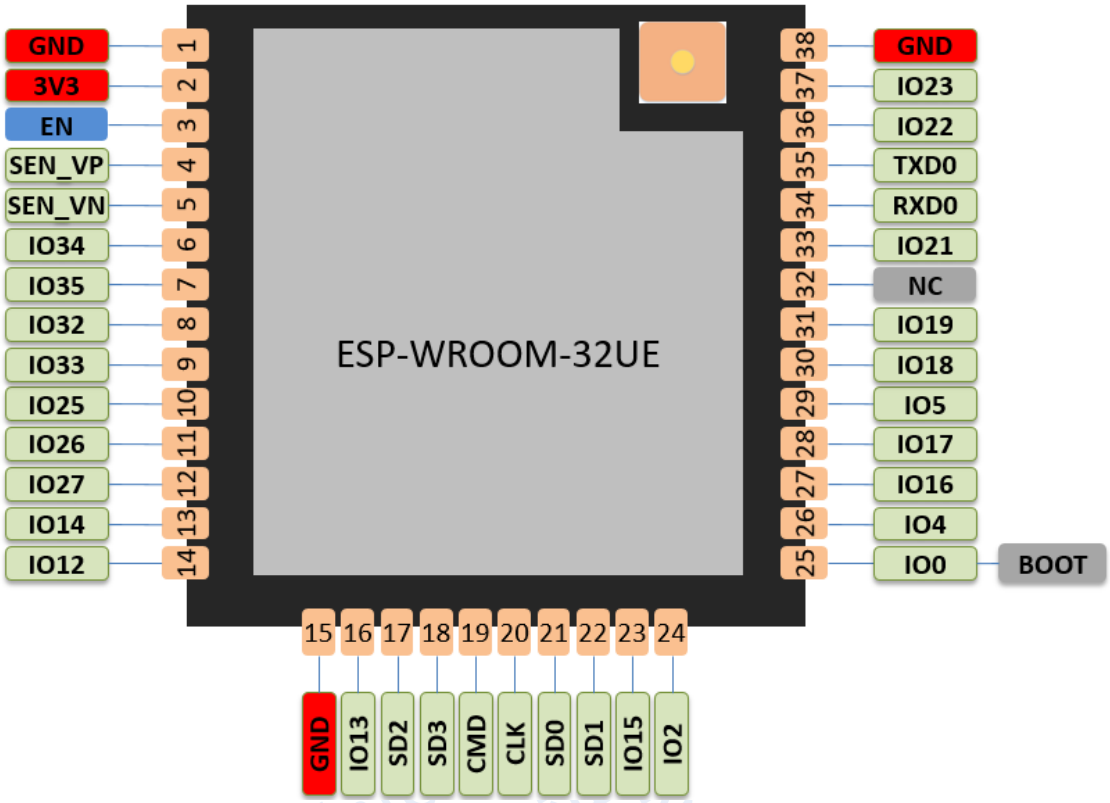

Fig.2.1 ESP-WROOM-32UE Pins Definition

Working modes and pins function is shown in Table 2.1.

Table.2.1Working Mode

Mode	IO0 Voltage Level
UART Download Mode	LOW
Flash Boot Mode	HIGH (Default)

Table.2.2 Pins Function Definition

Num.	Pin Name	Type	Function
1	GND	P	Ground
2	3V3	P	Power supply
3	EN	I	Chip enable; Internal Pull-up. HIGH: enable the chip
4	SEN_VP	I	GPIO36, ADC1_CH0, RTC_GPIO0

5	SEN_VN	I	GPIO39, ADC1_CH3, RTC_GPIO3
6	IO34	I	GPIO34, ADC1_CH6, RTC_GPIO4
7	IO35	I	GPIO35, ADC1_CH7, RTC_GPIO5
8	IO32	I/O	GPIO32, XTAL_32K_P (32.768 kHz crystal oscillator input), ADC1_CH4,TOUCH9, RTC_GPIO9
9	IO33	I/O	GPIO33, XTAL_32K_N (32.768 kHz crystal oscillator output), ADC1_CH5,TOUCH8, RTC_GPIO8
10	IO25	I/O	GPIO25, DAC_1, ADC2_CH8, RTC_GPIO6, EMAC_RXD0
11	IO26	I/O	GPIO26, DAC_2, ADC2_CH9, RTC_GPIO7, EMAC_RXD1
12	IO27	I/O	GPIO27, ADC2_CH7, TOUCH7, RTC_GPIO17, EMAC_RX_DV
13	IO14	I/O	GPIO14, ADC2_CH6, TOUCH6, RTC_GPIO16, MTMS, HSPICLK, HS2_CLK,SD_CLK, EMAC_TXD2
14	IO12	I/O	GPIO12, ADC2_CH5, TOUCH5, RTC_GPIO15, MTDI, HSPIQ, HS2_DATA2,SD_DATA2, EMAC_TXD3
15	GND	P	Ground
16	IO13	I/O	GPIO13, ADC2_CH4, TOUCH4, RTC_GPIO14, MTCK, HSPID, HS2_DATA3, SD_DATA3, EMAC_RX_ER
17	SD2	I/O	GPIO9, SD_DATA2, SPIHD, HS1_DATA2, U1RXD
18	SD3	I/O	GPIO10, SD_DATA3, SPIWP, HS1_DATA3, U1TXD
19	CMD	I/O	GPIO11, SD_CMD, SPICS0, HS1_CMD, U1RTS
20	CLK	I/O	GPIO6, SD_CLK, SPICLK, HS1_CLK, U1CTS
21	SD0	I/O	GPIO7, SD_DATA0, SPIQ, HS1_DATA0, U2RTS
22	SD1	I/O	GPIO8, SD_DATA1, SPID, HS1_DATA1, U2CTS
23	IO15	I/O	GPIO15, ADC2_CH3, TOUCH3, MTDO, HSPICS0, RTC_GPIO13, HS2_CMD,SD_CMD, EMAC_RXD3
24	IO2	I/O	GPIO2, ADC2_CH2, TOUCH2, RTC_GPIO12, HSPIWP, HS2_DATA0,SD_DATA0
25	IO0	I/O	GPIO0, ADC2_CH1, TOUCH1, RTC_GPIO11, CLK_OUT1, EMAC_TX_CLK
26	IO4	I/O	GPIO4, ADC2_CH0, TOUCH0, RTC_GPIO10, HSPIHD, HS2_DATA1,SD_DATA1, EMAC_TX_ER
27	IO16	I/O	GPIO16, HS1_DATA4, U2RXD, EMAC_CLK_OUT
28	IO17	I/O	GPIO17, HS1_DATA5, U2TXD, EMAC_CLK_OUT_180
29	IO5	I/O	GPIO5, VSPICS0, HS1_DATA6, EMAC_RX_CLK

30	IO18	I/O	GPIO18, VSPICLK, HS1_DATA7
31	IO19	I/O	GPIO19, VSPIQ, U0CTS, EMAC_TXD0
32	NC	-	-
33	IO21	I/O	GPIO21, VSPIHD, EMAC_TX_EN
34	RXD0	I/O	GPIO3, U0RXD, CLK_OUT2
35	TXD0	I/O	GPIO1, U0TXD, CLK_OUT3, EMAC_RXD2
36	IO22	I/O	GPIO22, VSPIWP, U0RTS, EMAC_TXD1
37	IO23	I/O	GPIO23, VSPID, HS1_STROBE
38	GND	P	Ground

Doctors of Intelligence & Technology 严禁复制

3. Size and Layout

Size for ESP-WROOM-32UE can be shown as follows.

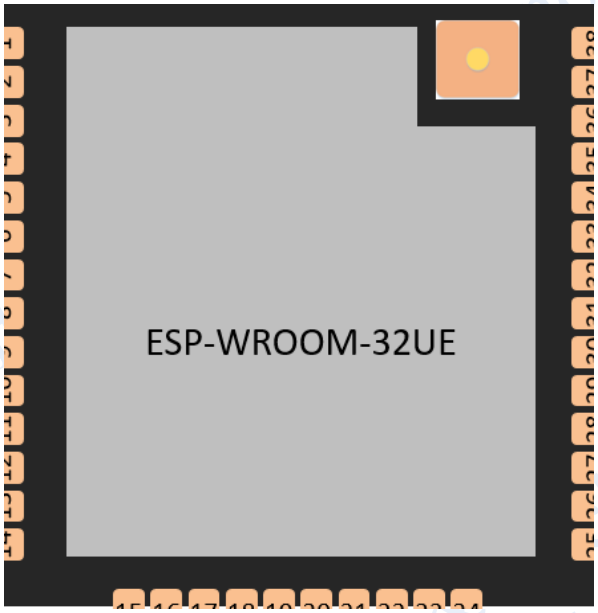

Fig.3.1 Shape for ESP-WROOM-32UE

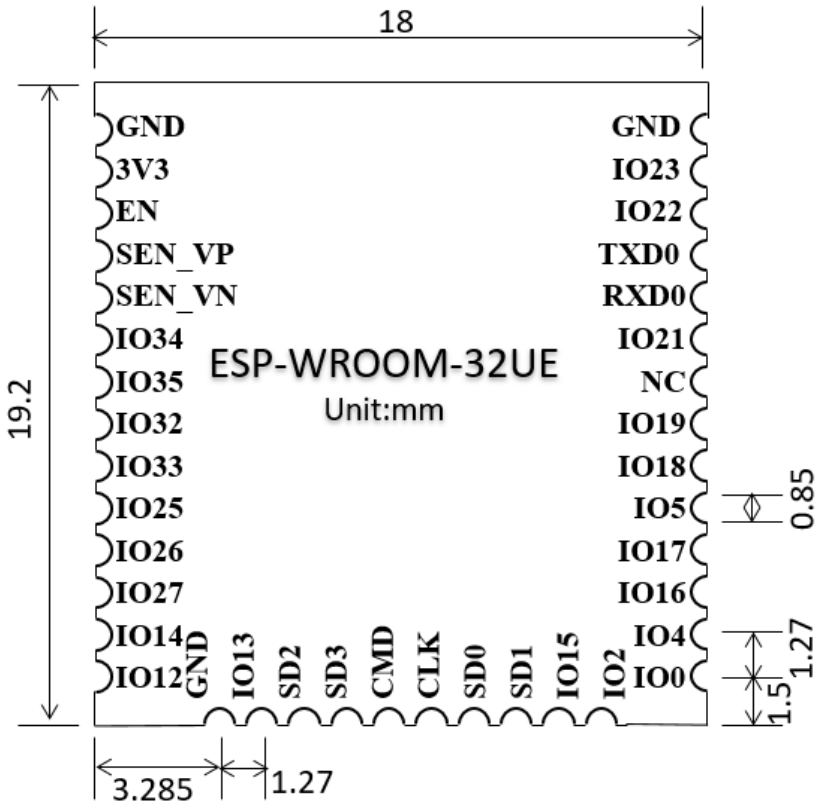

(a) Vertical View

(b) Side View

Fig.3.2 Size for ESP-WROOM-32UE

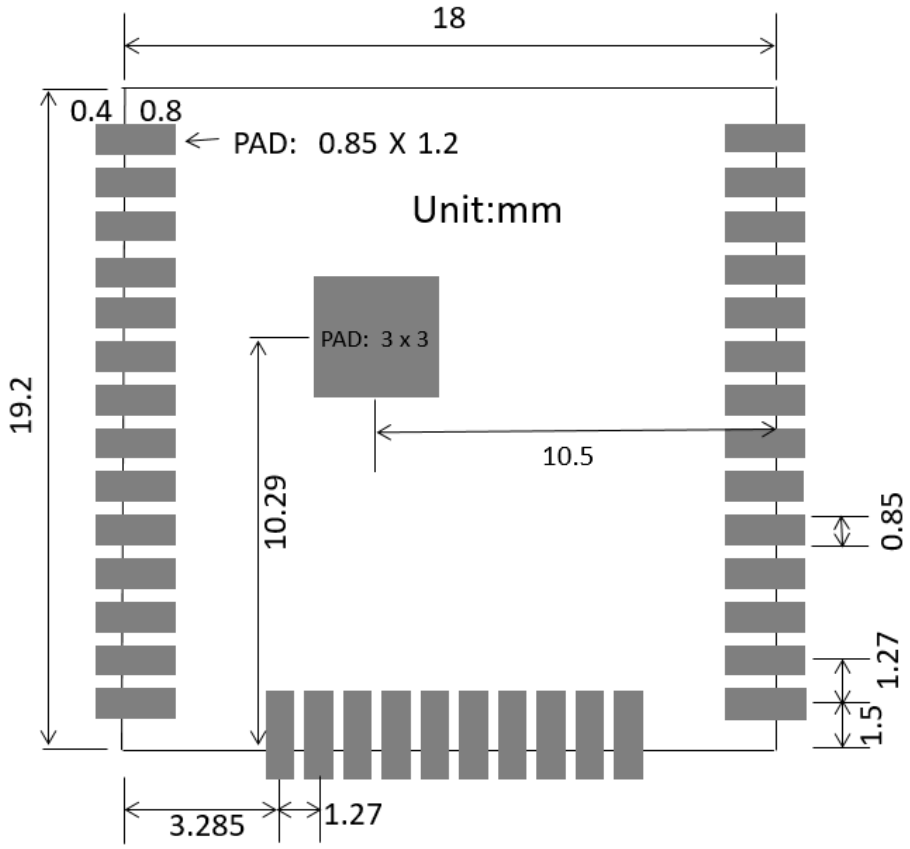

Fig. 3.3 PCB Layout for ESP-WROOM-32UE

4. Electronica Characteristics

Table.4.1 Electronica Characteristics

Parameters		Condition	Min	Classical	Max	Unit
Store Temperature		-	-40	Normal	105	℃
Sold Temperature		IPC/JEDEC J-STD-020	-	-	260	℃
Working Voltage		-	3.0	3.3	3.6	V
I/O	V_{IL}	-	-0.3	-	0.25*VDD	V
	V_{IH}	-	0.75*VDD	-	VDD+0.3	
	V_{OL}	-	-	-	0.1*VDD	
	V_{OH}	-	0.8*VDD	-	-	
Electrostatic Release Quantity (Human model)		TAMB=25℃	-	-	2	KV

Electrostatic Release Quantity (Machine model)	TAMB=25℃	-	-	0.5	KV

5. Power Consumption

Table.5.1 Power Consumption

Parameters	Min	Classical	Max	Unit
RX 11b /g/n, HT20	-	-	95	mA
RX 11n, HT40	-	-	97	mA
TX 11b, 1Mbps @19dBm		-	240	mA
TX 11g, 54Mbps @16dBm	-	-	190	mA
TX 11n, HT20, MCS7, @13dBm	-	-	180	mA
TX 11n, HT40, MCS7, @13dBm	-	-	180	mA
Modem-sleep, CPU is powered on @240MHz	-	68	-	mA
Light-sleep	-	0.8	-	mA
Deep-sleep, RTC timer + RTC memory	-	10	-	uA
Power off, CHIP_PU is set to low level	-	1	0	uA

The peak current consumption of ESP-WROOM-32UE exceed 500mA when the module start work (RF calibration work consumes maximum current). Therefore, the recommended power supply is no less than 500mA.

Note:

1. Active Mode: CPU and RF are all turned on.

2. Modem-sleep Mode: CPU is turned on. RF and baseband are turned off, but the communication is still connected.

3. Light-sleep Mode: CPU is turned off. RTC/external interrupt/MAC can wake up the chip. The communication is still connected.

4. Deep-sleep Mode: Only RTC is turned on.

6. Wi-Fi RF Characteristics

The data in the following table is gotten when voltage is 3.3V in the indoor temperature environment.

Table.6.1 Wi-Fi TX Characteristics

Parameters	Min	Classical	Max	Unit
Input frequency	2412	-	2484	MHz
802.11b	-	20.0	-	dBm
802.11n,MCS7	-	13	-	dBm

Table.6.2 Wi-Fi RX Sensitivity

Parameters	Min	Classical	Max	Unit
802.11b,1Mbps	-	-98	-	dBm
802.11b,11Mbps	-	-89	-	dBm
802.11g,6Mbps	-	-92	-	dBm
802.11g,54Mbps	-	-74	-	dBm
802.11n,HT20,MCS0	-	-91	-	dBm
802.11n,HT20,MCS7	-	-71	-	dBm
802.11n,HT40,MCS0	-	-89	-	dBm
802.11n,HT40,MCS7	-	-69	-	dBm

Table.6.3 Wi-Fi RX Characteristics

Parameters	Min	Classical	Max	Unit
ADJ Channel Rejection @11g, 6Mbps	-	31	-	dB
ADJ Channel Rejection @11g, 54Mbps	-	14	-	dB
ADJ Channel Rejection @11n,HT20,MCS0	-	31	-	dB
ADJ Channel Rejection @11n,HT20,MCS7	-	13	-	dB

7. Bluetooth LE Radio

Table.7.1 TX Transmitter General Characteristics

Parameters	Min	Classical	Max	Unit
RF power control range	-12	3	9	dBm
ADJ channel Transmit Power @F-F0±2MHz	-	-52	-	dBm
ADJ channel Transmit Power @F-F0±3MHz	-	-58	-	dBm
ADJ channel Transmit Power @F-F0±>3MHz	-	-60	-	kHz

△f1avg	-	-	265	kHz
△f2max	247	-	-	kHz
ICFT	-	-10	-	kHz

Table.7.2 RX Transmitter General Characteristics

Parameters		Min	Classical	Max	Unit
BLE	Sensitivity @30.8% PER	-	-96.5	-	dBm
	Maximum received signal @30.8% PER	0	-	-	dBm
	Co-channel C/I	-	10	-	dB

8. Recommended Sold Temperature Curve

(1) Reflow Times <= 2 times (Max.)

(2) Max Rising Slope: 3℃/sec

(3) Max Falling Slope: -3℃/sec

(4) Over 217℃ Time: 60~120sec

(5) Peak Temp:240℃~250℃

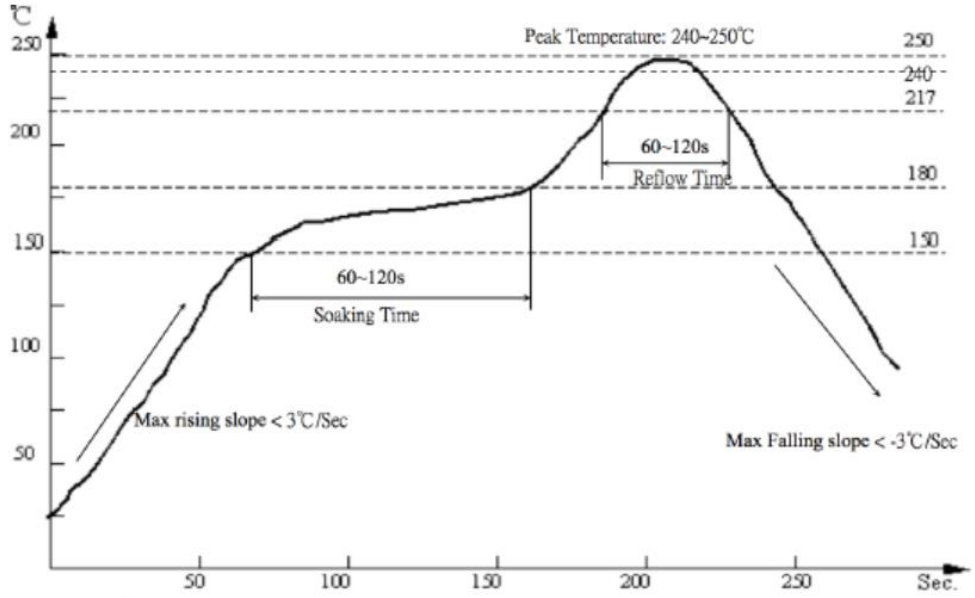

Fig.8.1 Recommended Reflow Profile

9. Minimum User System

This module can work just at 3.3V voltage condition:

Note:

(1) The working voltage for module is DC 3.3V;

(2) The max current from IO of this module is 40mA;

(3) Wi-Fi module is at download mode: IO0 is LOW level, then module reset to power;

(4) Wi-Fi module is connected to RXD of the other MCU, and TXD is connected to RXD of the other MCU.

10. Recommended Layout Design

ESP-WROOM-32UE module can be sold on PCB board directly. For the high RF performance for the device, please notice the placement of the module. There are three ways to use the module for Wi-Fi Module with PCB antenna.

Solution 1: optical solution. The Wi-Fi module is placed on the side of the board, and the antennas are all exposed, and there is no metal material around the antenna, including wires, metal casings, weight plates, and the like.

Solution 2: sub-optical solution. The Wi-Fi module is placed on the side of the board, and the antenna below is hollowed out. There is a gap of not less than 5 mm reserved with the PCB, and there is no metal material around the antenna, including wires, metal casings, weight plates, and the like.

Solution 3: The Wi-Fi module is placed on the side of the board, and the PCB area under the antenna is empty, and copper cannot be laid.

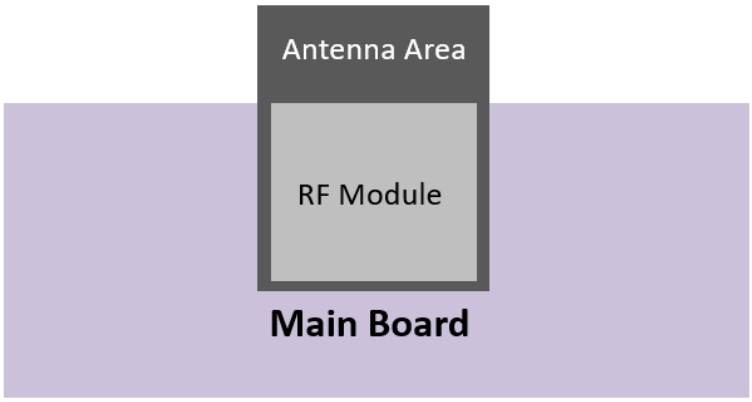

Fig.10.1 Solution 1

Doctors of Intelligence & Technology 严禁复制

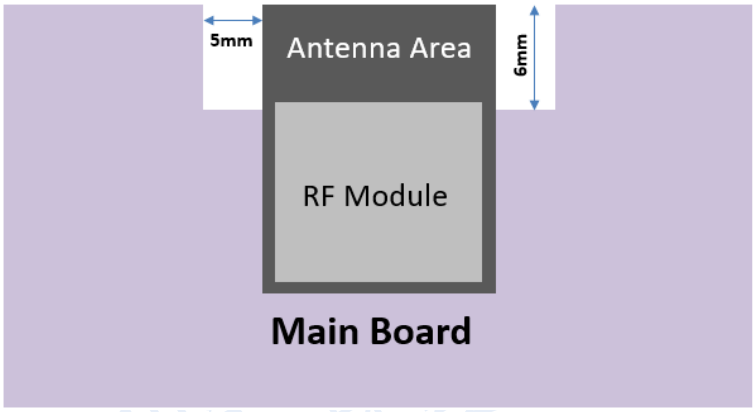

Fig.10.2 Solution 2

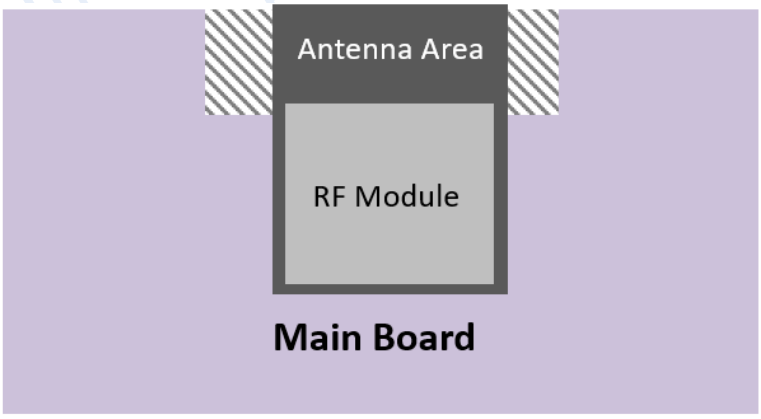

Fig.10.3 Solution 3

11. Peripheral Design Suggestion

Wi-Fi module is already integrated into high-speed GPIO and Peripheral interface, which may be generated the switch noise. If there is a high request for the power consumption and EMI characteristics, it is suggested to connect a serial 10~100 ohm resistance, which can suppress overshoot when switching power supply, and can smooth signal. At the same time, it also can prevent electrostatic discharge (ESD).

12. Product Handling

12.1 Storage Conditions

The products sealed in moisture barrier bags (MBB) should be stored in a non-condensing atmospheric environment of < 40 °C and 90%RH. The module is rated at the moisture sensitivity level (MSL) of 3. After unpacking, the module must be soldered within 168 hours with the factory conditions 25±5 °C and 60%RH. If the above conditions are not met, the module needs to be baked.

12.2 Electrostatic Discharge (ESD)

• Human body model (HBM): ±2000 V

• Charged-device model (CDM): ±500 V

13. U.F.L RF Connector

ESPC2-F1-E module use U.F.L type RF connector for external antenna connection. (IPEX V1.0).

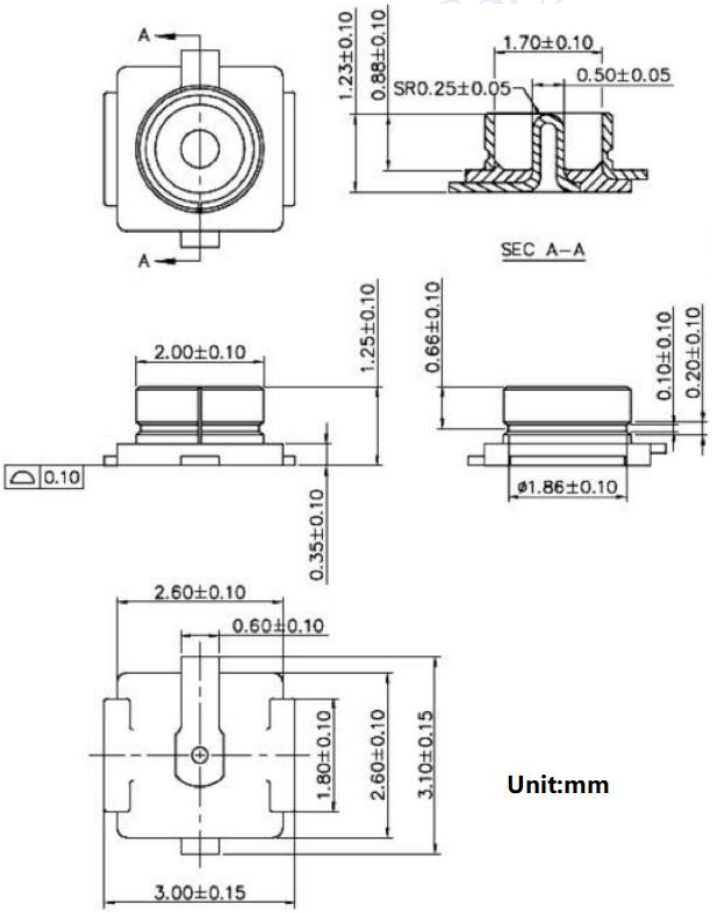

Fig.13.1 U.F.L RF Connector

14. Packing Instruction

The product is packed in a tray, as shown in the following figure.

The size of the single box is: 340 x 360 x 60mm, and 650 pieces module is in the box. And the outer box size is 355 x 375 x 325mm, including 5 single box which include 3250 pieces module.

Fig.14.1 Module Package

Doctors of Intelligence & Technology
严禁复制

Appendix: Module Schematic

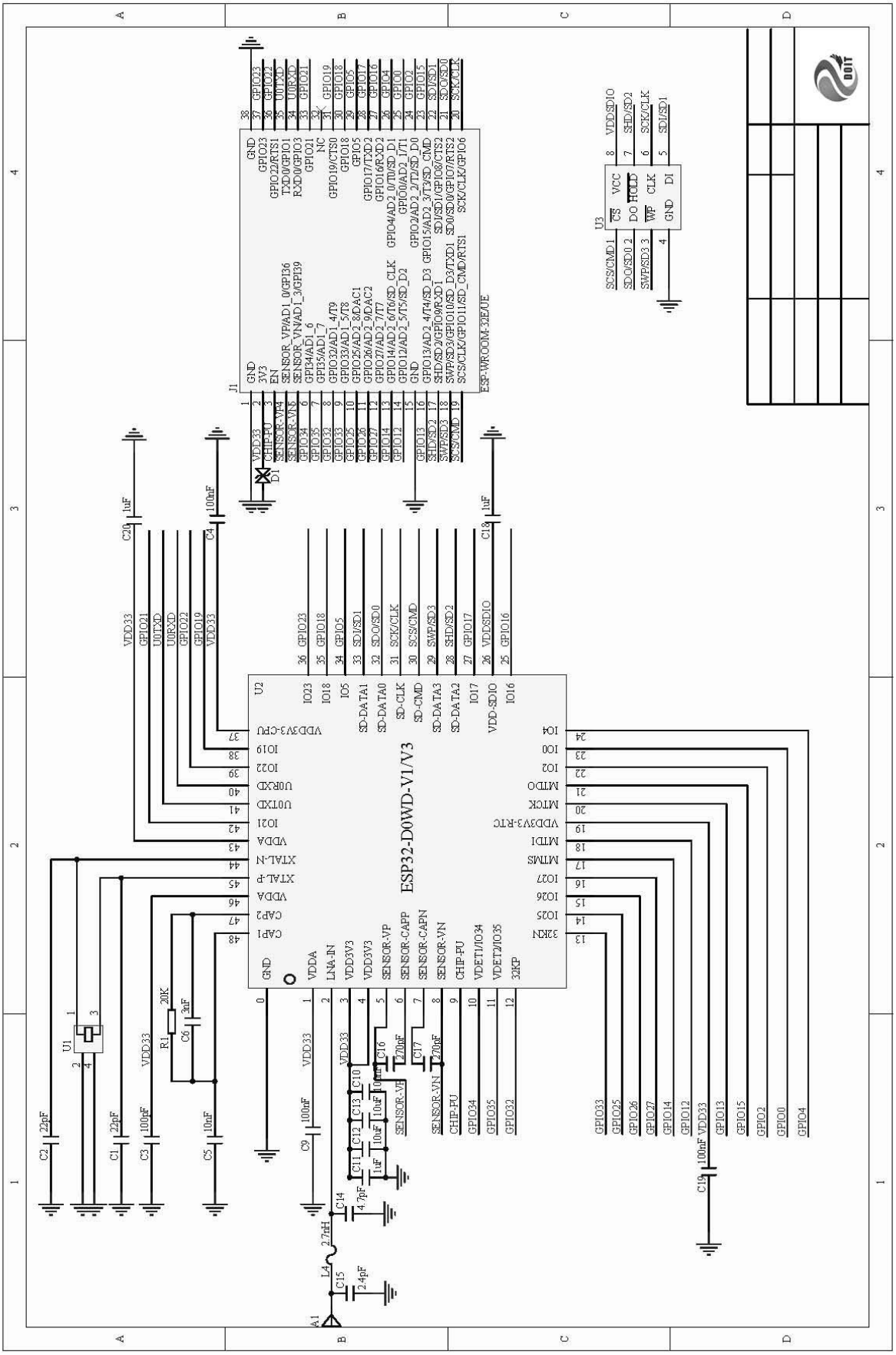

FCC Statement

This device complies with part 15 of the FCC rules. Operation is subject to the following two conditions: (1) this device may not cause harmful interference, and (2) this device must accept any interference received, including interference that may cause undesired operation.

Changes or modifications not expressly approved by the party responsible for compliance could void the user' s authority to operate the equipment.

NOTE: This equipment has been tested and found to comply with the limits for a Class B digital device, pursua nt to part 15 of the FCC Rules. These limits are designed to provide reasonable protection against harmful inte rference in a residential installation. This equipment generates uses and can radiate radio frequency energy a nd, if not installed and used in accordance with the instructions, may cause harmful interference to radio com munications. However, there is no guarantee that interference will not occur in a particular installation. If this equipment does cause harmful interference to radio or television reception, which can be determined by turn ing the equipment off and on, the user is encouraged to try to correct the interference by one or more of the following measures:

- Reorient or relocate the receiving antenna.
- Increase the separation between the equipment and receiver.
- Connect the equipment into an outlet on a circuit different from that to which the receiver is connected.
- Consult the dealer or an experienced radio/TV technician for help important announcement

Important Note:

Radiation Exposure Statement

This equipment complies with FCC radiation exposure limits set forth for an uncontrolled environment. This equipment should be installed and operated with minimum distance 20cm between the radiator and your body.

This transmitter must not be co-located or operating in conjunction with any other antenna or transmitter.

Country Code selection feature to be disabled for products marketed to the US/Canada.

This device is intended only for OEM integrators under the following conditions:

1. The antenna must be installed such that 20 cm is maintained between the antenna and users, and
2. The transmitter module may not be co-located with any other transmitter or antenna,
3. For all products market in US, OEM has to limit the operation channels in CH1 to CH11 for 2.4G band by supplied firmware programming tool. OEM shall not supply any tool or info to the end-user regarding to Regulatory Domain change. (if modular only test Channel 1-11)

As long as the three conditions above are met, further transmitter testing will not be required. However, the OEM integrator is still responsible for testing their end-product for any additional compliance requirements required with this module installed.

Important Note:

In the event that these conditions cannot be met (for example certain laptop configurations or co-location with another transmitter), then the FCC authorization is no longer considered valid and the FCC ID cannot be used on the final product. In these circumstances, the OEM integrator will be responsible for re-evaluating the end product (including the transmitter) and obtaining a separate FCC authorization.

End Product Labeling

The final end product must be labeled in a visible area with the following"

Contains FCC ID: **2BB77-WROOM-32X** "

Manual Information to the End User

The OEM integrator has to be aware not to provide information to the end user regarding how to install or remove this RF module in the user's manual of the end product which integrates this module.

The end user manual shall include all required regulatory information/warning as show in this manual.

Integration instructions for host product manufacturers according to KDB 996369 D03 OEM Manual v01r01

2.2 List of applicable FCC rules

CFR 47 FCC PART 15 SUBPART C has been investigated. It is applicable to the modular transmitter

2.3 Specific operational use conditions

This module is stand-alone modular. If the end product will involve the Multiple simultaneously transmitting condition or different operational conditions for a stand-alone modular transmitter in a host, host manufacturer have to consult with module manufacturer for the installation method in end system.

2.4 Limited module procedures

Not applicable

2.5 Trace antenna designs

Not applicable

2.6 RF exposure considerations

This equipment complies with FCC radiation exposure limits set forth for an uncontrolled environment. This equipment should be installed and operated with minimum distance 20cm between the radiator & your body.

2.7 Antennas

This radio transmitter **FCC ID:2BB77-WROOM-32X** has been approved by Federal Communications Commission to operate with the antenna types listed below, with the maximum permissible gain indicated. Antenna types not included in this list that have a gain greater than the maximum gain indicated for any type listed are strictly prohibited for use with this device.

Antenna No.	Model No. of antenna:	Type of antenna:	Gain of the antenna (Max.)	Frequency range:
BT/2.4GWIFI	/	PCB Antenna	3.57dBi for 2400-2500MHz;	

2.8 Label and compliance information

The final end product must be labeled in a visible area with the following" Contains **FCC ID:2BB77-WROOM-32X**".

2.9 Information on test modes and additional testing requirements

Host manufacturer is strongly recommended to confirm compliance with FCC requirements for the transmitter when the module is installed in the host.

2.10 Additional testing, Part 15 Subpart B disclaimer

Host manufacturer is responsible for compliance of the host system with module installed with all other applicable requirements for the system such as Part 15 B.

2.11 Note EMI Considerations

Host manufacture is recommended to use D04 Module Integration Guide recommending as "best practice" RF design engineering testing and evaluation in case non-linear interactions generate additional non-compliant limits due to module placement to host components or properties.

2.12 How to make changes

This module is stand-alone modular. If the end product will involve the Multiple simultaneously transmitting condition or different operational conditions for a stand-alone modular transmitter in a host, host manufacturer have to consult with module manufacturer for the installation method in end system. According to the KDB 996369 D02 Q&A Q12, that a host manufacture only needs to do an evaluation (i.e., no C2PC required when no emission exceeds the limit of any individual device (including unintentional radiators) as a composite. The host manufacturer must fix any failure.