Anona Keypad User Manual

ANONA

Product overview

Please read this manual carefully before using the product and keep it in a safe place.

Package contents

Smart keypad

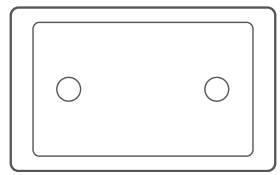

Plate

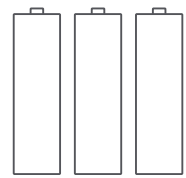

AA battery × 3

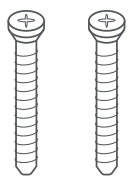

Screw × 2

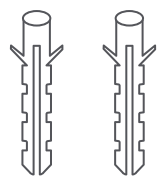

Wall plug × 2

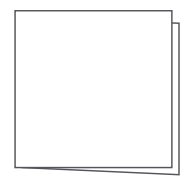

User manual

Product overview

Smart keypad

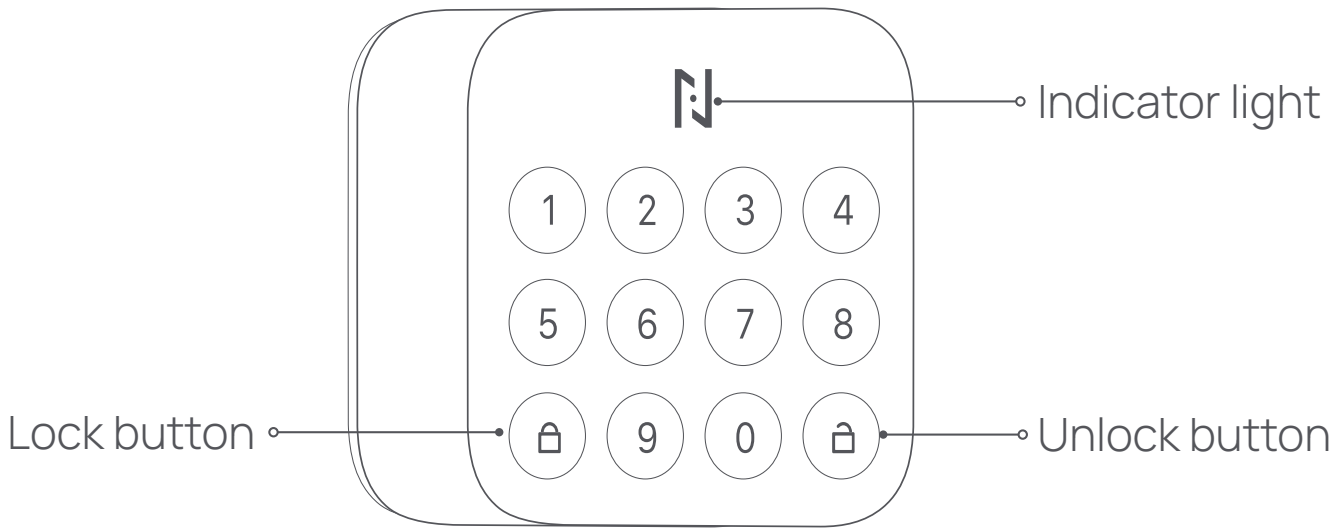

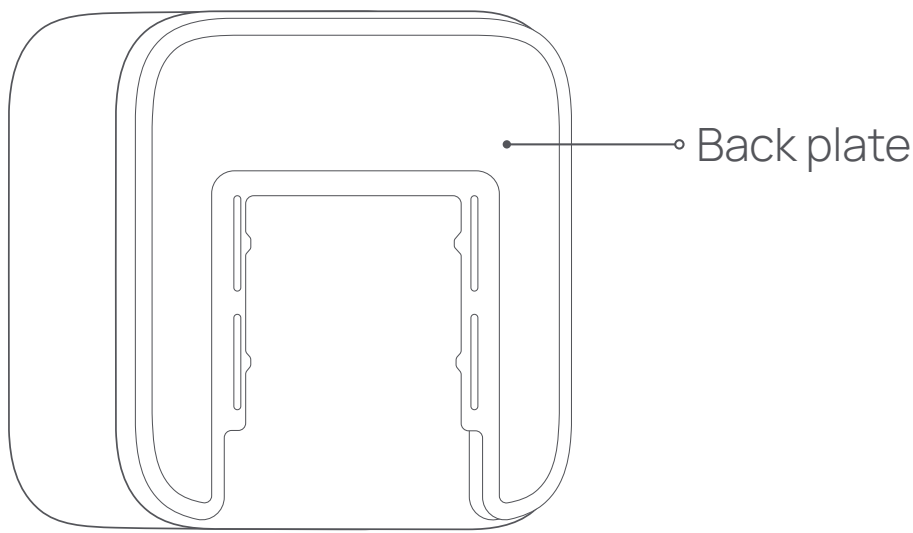

Installing batteries

1. Unscrew the back plate.
2. Install the batteries with the correct polarity.
3. Restore the back plate to the keypad and tighten the screws.

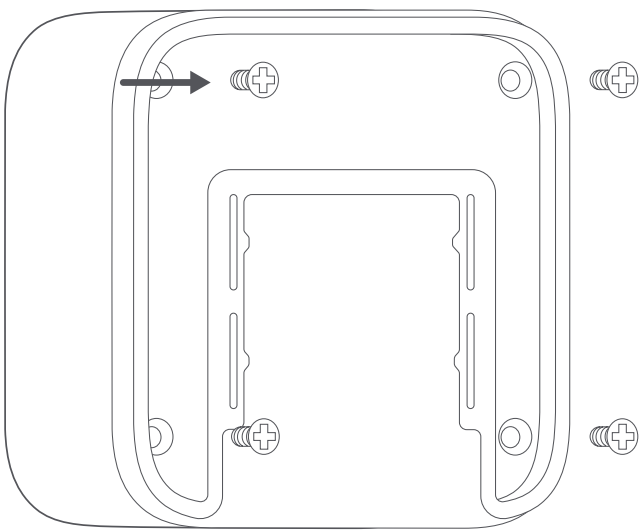

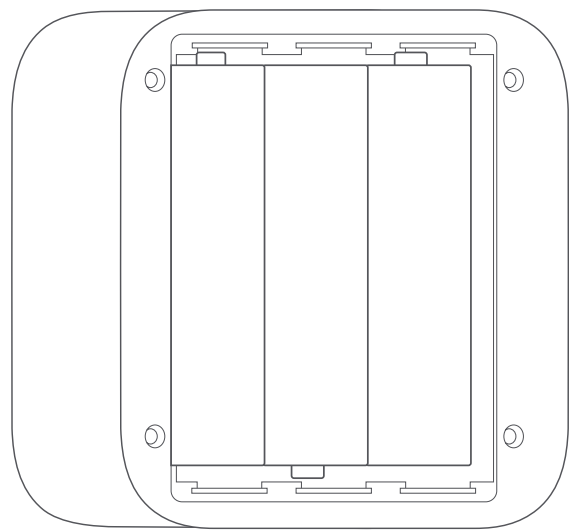

Product usage

Description	Indicator light status
Awaiting pairing/During the pairing process	Flashing white
Paired/Connected successfully	Solid white
Disconnected	Flashing red
Low battery	Solid red
Description	**Buzzer status**
Locked/Unlocked successfully	Buzzer beeping
Couldn't lock/unlock	Buzzer beeping twice
Description	**Button operation**
Entering pairing mode	Press and hold the Lock button for about 5 seconds

Pairing smart keypad

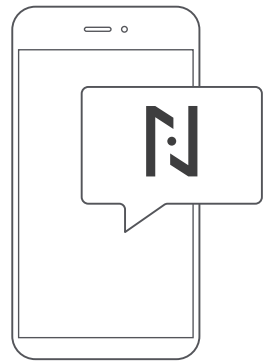

1. Open the Anona app, go to the "Device" page, and find the Anona smart lock that is to be paired.
2. Make sure that the smart lock is connected with your phone, and then tap "My password".
3. Follow the on-screen instructions to complete the pairing and set your password.

Note: Before binding, ensure your phone is connected to the Internet and the Bluetooth is enabled. Also ensure the smart keypad is in pairing mode with indicator light flashing white.

Installing smart keypad

1. Select the suitable option to install the plate.

Note: The smart keypad should be installed within a 3 meter range of the smart lock.

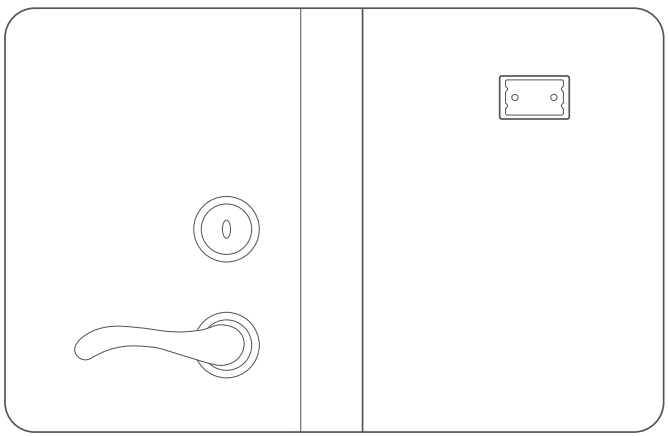

Option 1: Using adhesive on the back of plate.

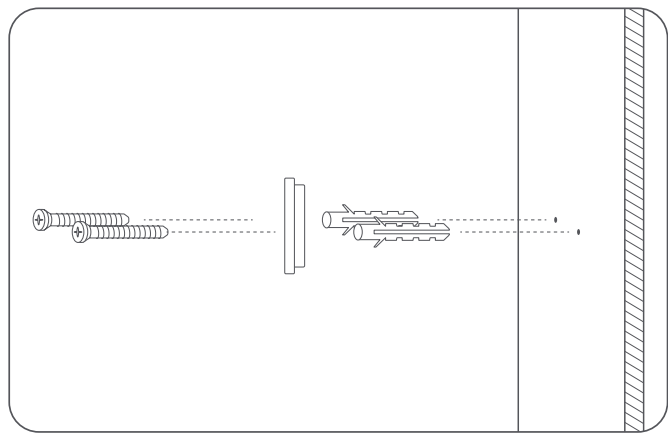

Option 2 (Recommended): Using wall plugs and screws.

2. Align the groove on the keypad with the top of the plate and slide down until you hear a click sound.

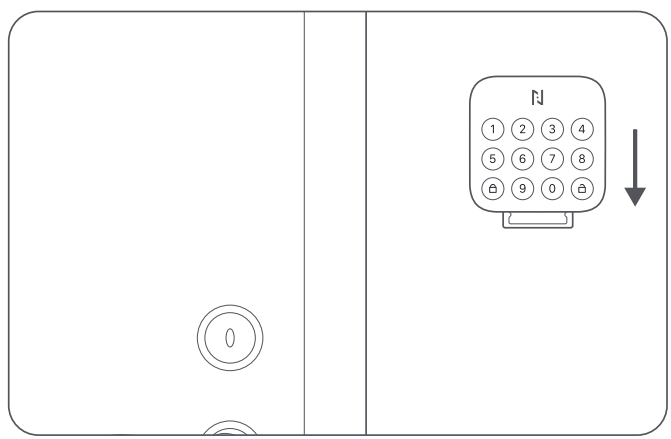

Cautions

- Temperature for normal use of this product is-10°C to 55°C and temperature for storage of this product is -30°C to 70°C. Do not use or store this product in the environment at too high or too low temperature.
- Illustrations of the product, accessories, and user interface in the user manual are for reference purposes only. The actual product and functions may vary due to product enhancements.

Specifications

Product: Smart Keypad

Model: KP2001

Item dimensions: 62.5mm × 62.5mm × 32mm

Input: 3 × AA battery

Wireless connectivity: Bluetooth® 5.2

FCC Caution.

15.19 Labelling requirements.

This device complies with part 15 of the FCC Rules. Operation is subject to the following two conditions: (1) This device may not cause harmful interference, and (2) this device must accept any interference received, including interference that may cause undesired operation.

15.21 Information to user.

Any Changes or modifications not expressly approved by the party responsible for compliance could void the user's authority to operate the equipment.

15.105 Information to the user.

Note: This equipment has been tested and found to comply with the limits for a Class B digital device, pursuant to part 15 of the FCC Rules. These limits are designed to provide reasonable protection against harmful interference in a residential installation. This equipment generates uses and can radiate radio frequency energy and, if not installed and used in accordance with the instructions, may cause harmful interference to radio communications. However, there is no guarantee that interference will not occur in a particular installation. If this equipment does cause harmful interference to radio or television reception, which can be determined by turning the equipment off and on, the user is encouraged to try to correct the interference by one or more of the following measures:

-Reorient or relocate the receiving antenna.

-Increase the separation between the equipment and receiver.

-Connect the equipment into an outlet on a circuit different from that to which the receiver is connected.

-Consult the dealer or an experienced radio/TV technician for help.

RF warning for Mobile device:

This equipment complies with FCC radiation exposure limits set forth for an uncontrolled environment. This equipment should be installed and operated with minimum distance 20cm between the radiator & your body.
FCC ID: 2BB7K-KP2001

ISED compliance statement

This device contains licence-exempt transmitter(s)/receiver(s) that comply with Innovation, Science and Economic Development Canada's licence-exempt RSS(s). Operation is subject to the following two conditions:
(1) This device may not cause interference.
(2) This device must accept any interference, including interference that may cause undesired operation of the device.
L'émetteur/récepteur exempt de licence contenu dans le présent appareil est conforme aux CNR d'Innovation, Sciences et Développement économique Canada applicables aux appareils radio exempts de licence. L'exploitation est autorisée aux deux conditions suivantes :
(1) L'appareil ne doit pas produire de brouillage;
(2) L'appareil doit accepter tout brouillage radioélectrique subi, même si le brouillage est susceptible d'en compromettre le fonctionnement.

ISED Radiation Exposure statement

This equipment complies with IC RSS-102 radiation exposure limits set forth for an uncontrolled environment. This equipment should be installed and operated with minimum distance 20 cm between the radiator and your body. Cet équipement est conforme aux limites d'exposition aux radiations IC CNR-102 établies pour un environnement non contrôlé. Cet équipement doit être installé et utilisé avec une distance minimale de 20 cm entre le radiateur et votre corps.

IC: 30992-KP2001

The Bluetooth® word mark and logos are registered trademarks owned by Bluetooth SIG, Inc. and any use of such marks by Anona Security Technology Limited is under license. Other trademarks and trade names are those of their respective owners.

V1.0-20230822

Service: help@anonasecurity.com
For further information, please go to www.anonasecurity.com
Manufacturer: Anona Security Technology Limited
Address: 8 The Green,Ste A Dover DE 19901, America