Home EV Wallbox

User manual

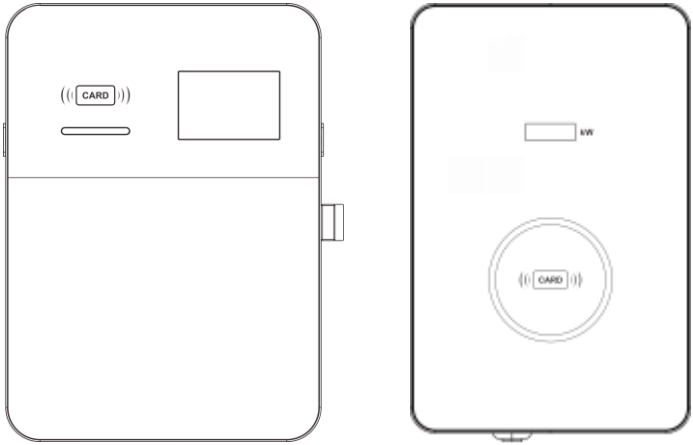

Version: V1.2

CONTENT

1 Warranty

2 Safety and Warning

3 Introduction

3.1 Product Technical Specifications

3.2 External Structure

3.3 Package Contents

4 Configuration and Operation

4.1 Power-on Checking

4.2 Start and stop charging station by your charge card

4.3 Start and stop charging station by APP(Bluetooth)

5 Set up and update

5.1 Mode setting for maximum charging current

5.2 External enabling/disabling of the Wallbox

5.3 Firmware version upgrade

6 Troubleshooting

6.1 Indicator Status

6.2 Fault Code and Resolution(LCD display)

6.3 Fault Code and Resolution(LED display)

Warranty

QUANTEX SMART ENERGY. (Hereinafter “QSE”) warrants that Products supplied to Customer pursuant to this Agreement/Contract shall be of merchantable quality and shall meet all applicable safety standards and free from any defect of design, material and workmanship within the warranty period. The warranty period is Twenty-four (24) months since from the delivery date. QSE warranty does not cover damages resulting from inappropriate storage, incorrect installation, improper operation or bad environment beyond environmental requirement.

Customer gives notice in writing within a period of ten (10) days after Customer has discovered that some or all Products do not comply with the warranty as set out in this warranty. Customer shall provide necessary assistance to QSE for failure detection. QSE gives response within a reasonable time of 48 hours. QSE shall analyze the fault reason and provide technical instruction for Customer to repair Products.

Customer repairs Products and applies for free spare parts from QSE in case replacements are required. A written claim report about fault description, serial number of Products, photos of Products and applied spare parts must be sent to QSE for verification. QSE shall not accept the claim if modifications or reworking have been performed to Products without QSE’s consent. Spare parts are offered for free within the warranty period. Beyond warranty period, spare parts are offered at Customer’s cost.

Faulted parts replaced by Customer shall be well stored and packaged with markings of fault description for further disposal by QSE. The faulted parts after repair and test can be treated as spare part to Customer.

No local service is provided for free and QSE charges service fee for local service according the following standards: USD100 (USD One Hundred Only) per person per day plus the actual travel costs and material costs. A mutual agreement should be reached before offering local service.

Except as set forth herein, QSE provides no other warranty, whether express or implied. The warranty applies only to Products which are supplied by QSE and are used out of Mainland China.

1 Safety and Warning

Save these instructions. Read all instruction before installing or using the charger.
1）Keep the charger away from explosive or flammable materials, chemicals, vapors and other hazard objects.
2）Keep the charger socket clean and dry. If it gets dirty, please wipe it with clean dry cloth.
3）Touching the socket core is strictly forbidden when power on.
4）Do not use the charger in case of any device defects, crack, abrasion, bare leakage and so on. Please contact the professional personnel if any of these conditions occurs.
5）Do not attempt to dissemble, repair, refit the charger. If necessary, please contact the professional personnel. Improper operation will result in device damage, electric leakage, etc.
6）In case any abnormal condition happens, please cut off all input and output power supplies immediately.
7）Please protect charging carefully from rain and lightening.
8）Keep children away from the charger.
9）During charging, do not drive the EV Charge only when the EV is stationary,for hybrid cars, charge only when the engine is switched off.
10) Our packaging materials are environmentally friendly and can be recycled. Please put the packaging in applicable containers to recycle it. Do not dispose of this device with the household waste. It should be taken to a suitable facility for recycling of electrical and electronic devices. For more detailed information about recycling of this device, please contact your local city/town council office or your household waste disposal service.

Warning

The input and output voltages of this device are high voltage, which threaten human life safety. Please strictly observe all warnings on the device and user manual. Unauthorized and non-professional service personnel are forbidden to remove the cover of this device.

2 Introduction

2.1 Product Technical Specifications

Model	**QTUF40EV** **QTUM40EV** **QTUY40EV**	**QTUF48EV** **QTUM48EV** **QTUY48EV**	**QTUF60EV** **QTUM60EV** **QTUY60EV**
Technical features			
Charging capacity	Up to 9.6.5KW	Up to 12KW	Up to 14.4KW
Input/Output power	85-265VAC-50/60Hz-40A-1phase	85-265VAC-50/60Hz-48A-1phase	85-265VAC-50/60Hz-60A-1phase
RCD	30Ma RCD Type A and DC 6Ma RCD function		
Standby power	<3W		
Measuring accuracy	1%		
Communication	Bluetooth/WIFI(Optional) APP		
User interface	LED/LCD(3.5')/ RFID(Mifare ISO& IEC 14443A)		
Input Plug	NEMA 14-50(Optional)		
Certificate	NEC 625, SAE J1772, UL 817, UL 991, UL 2231, UL 225, and UL 2594.		
Charging Interface	SAE J1772 40A 5M	SAE J1772 48A 5M	SAE J1772 60A 5M
Special Protection	Over current protection, Residual current protection, Ground protection, Surge protection, Over/Under voltage protection, Over/Under temperature protection		
Physical properties			
Warranty	2 years		
Protection	IP54, IK10		
Enclosure	Plastic PC940/ Galvanized steel		
Front Panel	Temper glass		
Special Protection	Over current protection, Residual current protection, Ground protection, Surge protection, Over/Under voltage protection, Over/Under temperature protection		
Installation	Wall-mount/Pole-mount		
Cooling	Natural cooling		
Operating temperature	-30℃ to +55℃		
Humidity	Max.95%(non-regulating)		
Product Dimensions	320*230*100(L*W*H)mm		
Package Dimension	465*325*270(L*W*H)mm		

Net Weight	5.5Kg	5.8Kg	7Kg
Gross Weight	6.2Kg	6.5Kg	7.5Kg
Model	**QTUF80EV** **QTUM80EV** **QTUY80EV**		
Technical features			
Charging capacity	Up to19.2KW		
Input/Output power	85-265VAC-50/60Hz-80A-1phase		
RCD	30Ma RCD Type A and DC 6Ma RCD function		
Standby power	<3W		
Measuring accuracy	1%		
Communication	Bluetooth/WIFI(Optional) APP		
User interface	LED/LCD(3.5')/ RFID(Mifare ISO& IEC 14443A)		
Input Plug	NEMA 14-50(Optional)		
Certificate	NEC 625, SAE J1772, UL 817, UL 991, UL 2231, UL 225, and UL 2594.		
Charging Interface	SAE J1772 80A 5M		
Special Protection	Over current protection, Residual current protection, Ground protection, Surge protection, Over/Under voltage protection, Over/Under temperature protection		
Physical properties			
Warranty	2 years		
Protection	IP54, IK10		
Enclosure	Plastic PC940/ Galvanized steel		
Front Panel	Temper glass		
Special Protection	Over current protection, Residual current protection, Ground protection, Surge protection, Over/Under voltage protection, Over/Under temperature protection		
Installation	Wall-mount/Pole-mount		
Cooling	Natural cooling		
Operating temperature	-30℃ to +55℃		
Humidity	Max.95%(non-regulating)		
Product Dimensions	320*230*100(L*W*H)mm		
Package Dimension	465*325*270(L*W*H)mm		
Net Weight	8.2Kg		
Gross Weight	8.7Kg		

2.2 External Structure

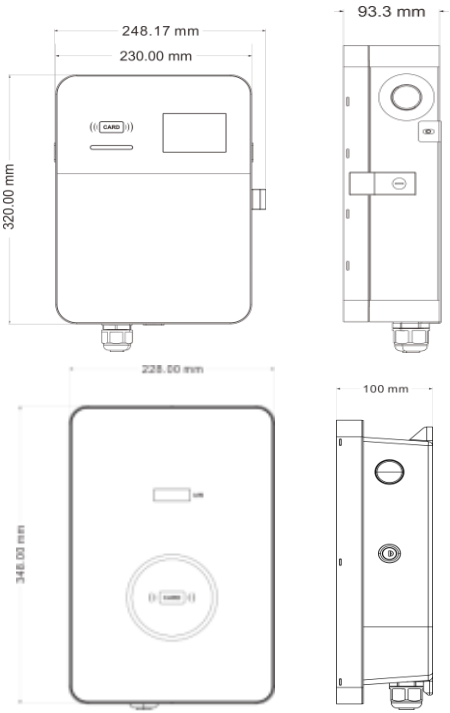

2.3 Package Contents

Unpack the product. Please check and verify following items after receiving the charger :

- Visual inspection on charger’s external appearance. If there is any breakage or other damage,please notify the seller immediately.
- Check type and quantity of all accessories as follows. If there is a shortage in the quantity of any item or if any items are missing, please contact the seller at once.

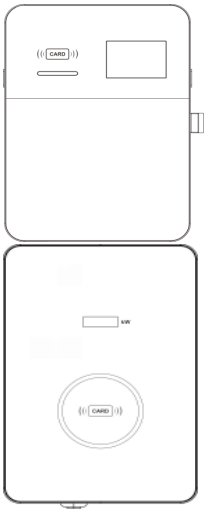				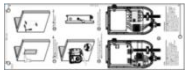
	User Manual (x1)	φ6 Expansion Pipe (x6)	M4*40 Screw (x6)	Installation cardboard (x1)
Wallbox(x1)	The holder (x1)	RFID CARD (x2)	Key (x2)	

3 Operation Instruction

3.1 Installation Preparation

1) Tools required

Tool Name	Photo	Function
Multimeter	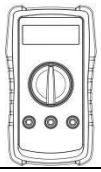	Check electrical connection and electrical parameter
Cross Screwdriver (PH2x150mm, PH3x250mm)		Tighten the screws

Insulated Torque Wrench	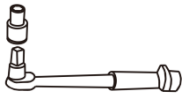	Tighten the bolts
Electric drill	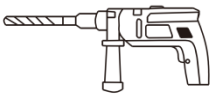	Hole on the wall
Diagonal Pliers	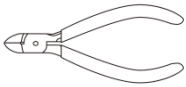	Cut cables

2) Cables & Materials

Name	Specification	Quantity
Power supply cable	Single-phase or three-phase power supply cable	Depend on actual requirement

3.2 Installation Process

1) Installation Notice

- Electrical devices should only be installed, operated, and maintained by qualified personnel. No responsibility is assumed by the manufacturer for any consequences arising out of the use of this device. A qualified person is one who has certified skills and knowledge related to the construction, installation and operation of this type of electrical device and who has received safety training to recognize and avoid the hazards involved.
- All applicable local, regional, and national regulations must be applied when installing, repairing and maintaining this device.
- RCD of the charger is intergrated 6mA DC, please install a Type A breaker outside.

2) Checks before starting the Installation Process

- Ensure the charger's location allows good operational access for normal use and repair & maintenance.
- The AC input components within the premise's power supply are correctly fitted with required protection items prior to installation of the charger.

3) Installation Procedure

1. Please use a percussion drill to drill holes according to the cardboard positioning

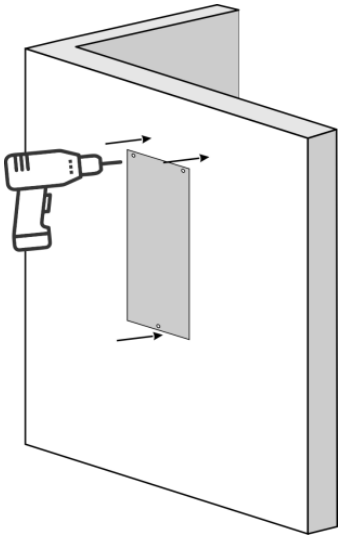

2. Install expansion bolts(3*M6*60MM)

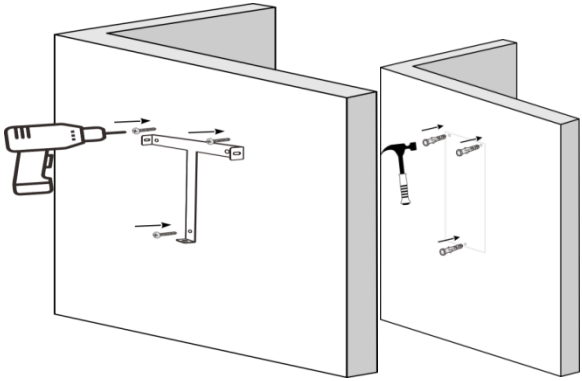

3. Open the cover with the key,fix the charging station with self=tapping screws(3*M5*50mm)

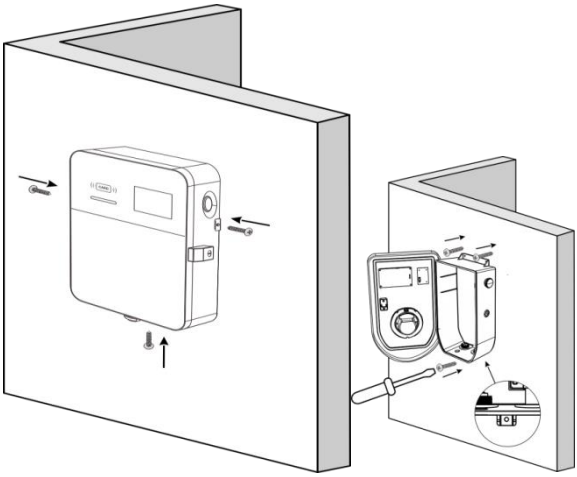

4. Use a cable with a size of 3*10AWG(32A)/ 3*9AWG(40A)/ 3*8AWG(48A)to connect to the input terminal of the charging station, from left to right,N / L and PE wire, and then tighten the screw with a screwdriver.

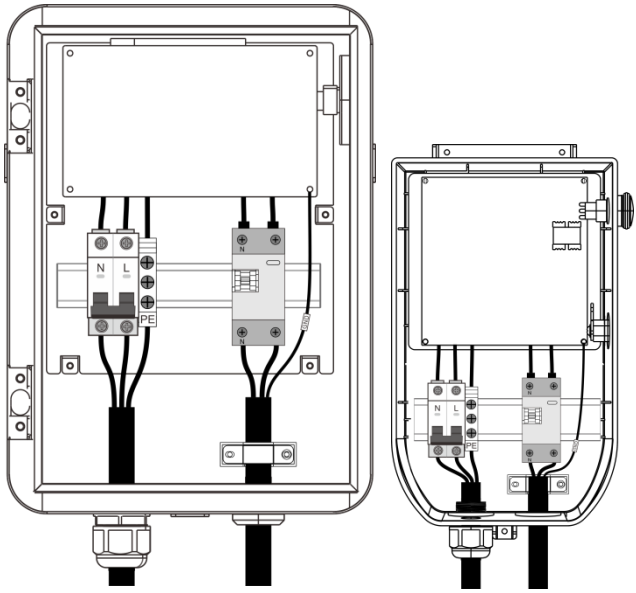

5. Fix the hook on the wall with screws (3*M5*50mm)

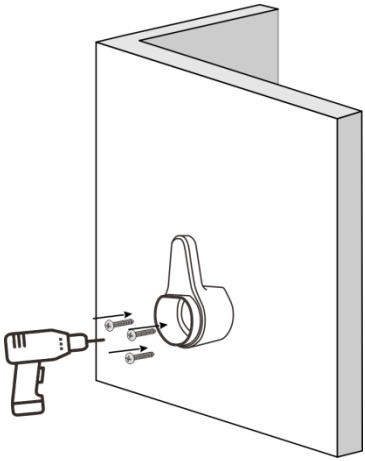

6. Lock the cover and start to test and charge

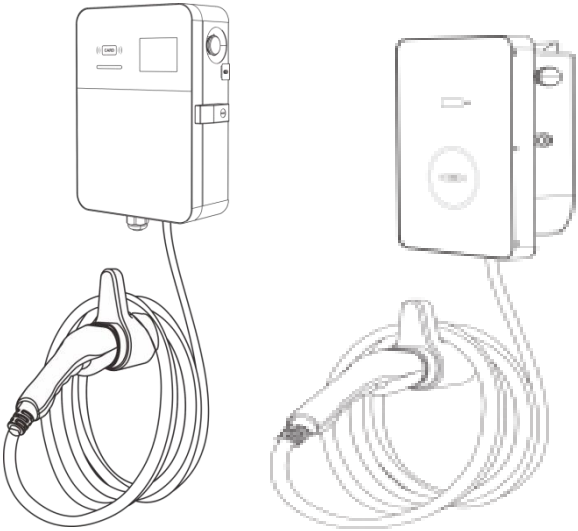

4 Configuration and Operation

4.1 Power-on Checking

Please check / re-check the following items prior to initial Power-on :

- The charger's location allows good operational access to normal use and repair & maintenance.
- The AC input components within the premise's power supply are fitted correctly with required protection items prior to installation of the charger.
- Double confirm the charger is installed properly.
- No components or other items have been left on the top of the charger.

4.2 Start and stop charging station by your charge card

Start charging

1. Plug charging cable into your car and LED ring turns yellow.
2. Hold your charge card (RFID Card) in front of the reader, marked with icon waiting 3 seconds.
3. reacts with a beep,LED ring turns green(Breathing state) when it starts charging.

Stop charging

1. Hold your charge card (RFID Card) in front of the reader, marked with icon waiting 3 seconds.
2. reacts with a beep,LED ring turns green when it stops charging.
3. Unplug charging cable from your car and place the charging cable back into cable holder.

4.3 Start and stop charging station by APP(Bluetooth)

Step1-Download the APP“QT EV”from APP store or Google paly

Step 2-Click the Bluetooth icon to enter the interface of binding the device

Step 3-Connect the wallbox

Click

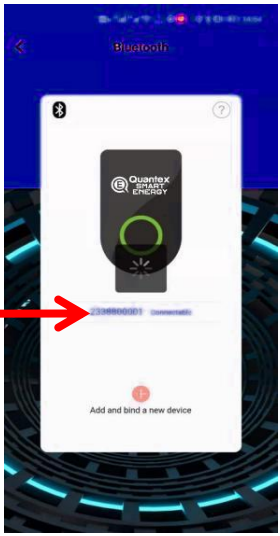

Note:
1,The number is the charging station number that at the bottom right of the LCD display.

2,The initial password is 123456. After the device is successfully connected, the password can be changed.

Note:
1, Make sure there is a display (connectable) behind the device number.
2, Click on the device number, wait for about 10S to enter the next interface.
3, If you do not enter the next interface, please turn off the Bluetooth of your phone and wait for 3S to turn on the Bluetooth of your phone again, and repeat the second step.

Step 4-Connect your ev car with the charger gun and start charging

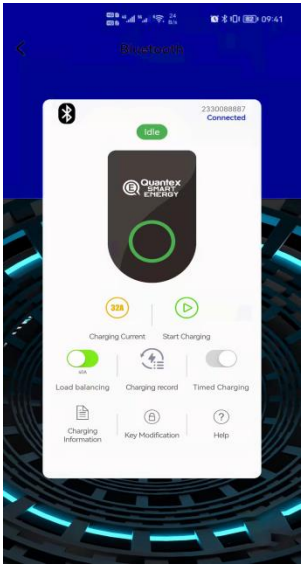

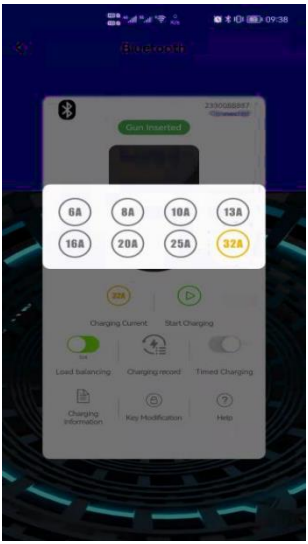

Step 5-Modify the charging station key by APP(Bluetooth)

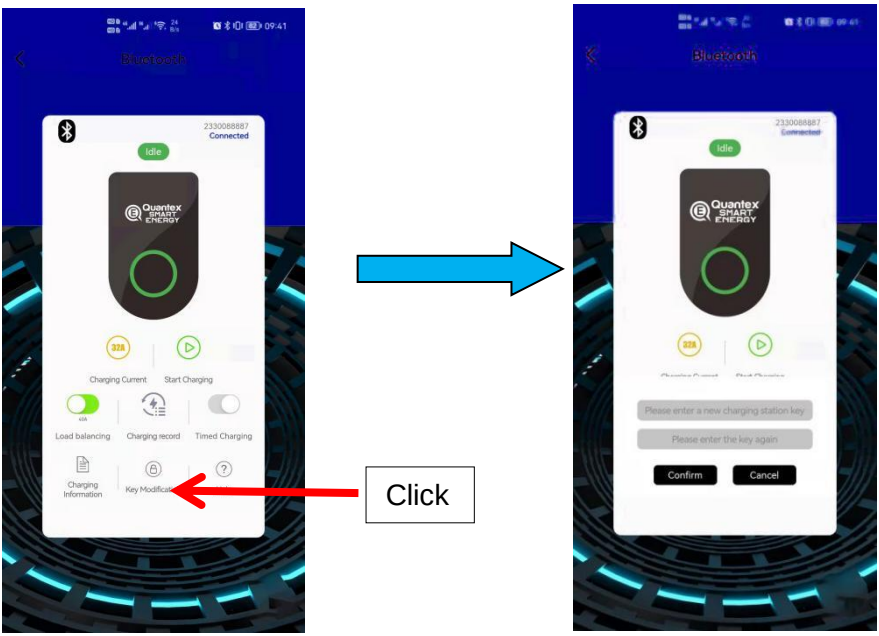

Note:
If you forget the modified device password, you can repeatedly quickly press the emergency stop button on the right side of the charging station 4 times (press it down and reset clockwise once, and it will be completed within 3 seconds) to restore the factory settings password.

Step 5-Start charging at the appointment time by APP(Bluetooth)

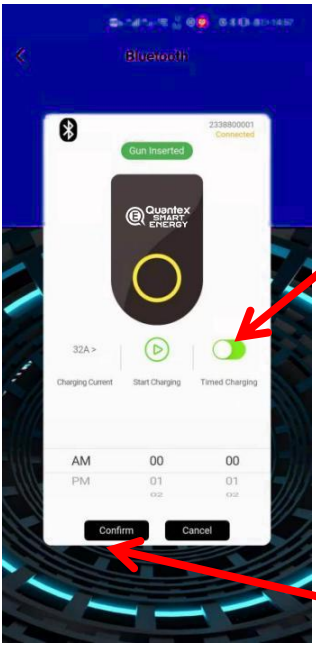

1Click

2Click

3Click

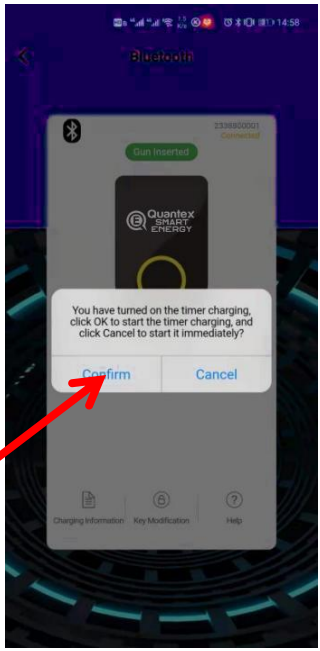

Note:
1. Click the set time button and select the time to start charging.
2. Click the button to start charging, and confirm to start charging at a predetermined time.

Step 6-Load balancing setting by APP(Bluetooth)

Load balancing needs a power-sampling device on the incoming mains supply cables, which could be a power meter or a current transducer and normally located in the meter box.

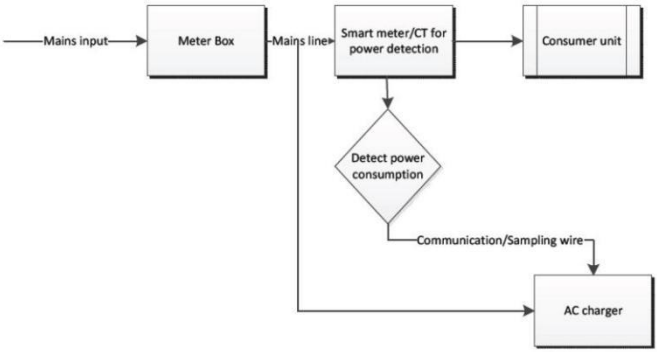

Set your maximum overload current through the APP according to the fuse capacity of your household's total incoming line

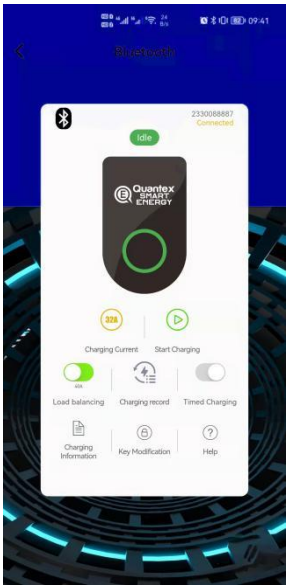

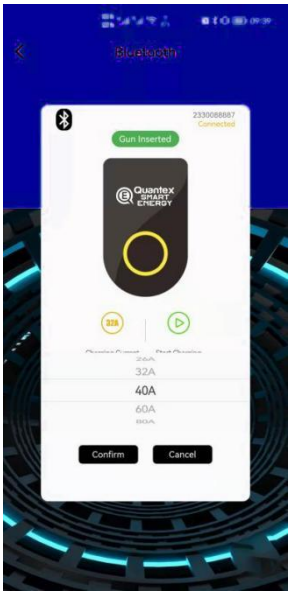

Step 7-Charging history view by APP(Bluetooth)

Click

By viewing the charging history, you can clearly understand the daily or monthly charging time and charge level of your charging station.

5 Set up and update

5.1 Mode setting for maximum charging current

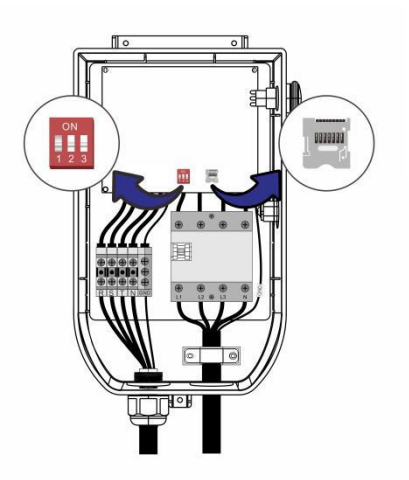

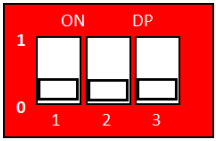

MAX 40A

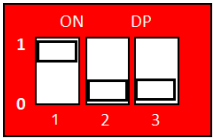

MAX 48A

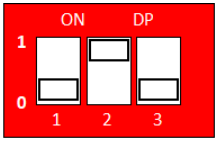

MAX 60A

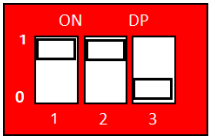

MAX 80A

5.3 Firmware version upgrade

This product can update the firmware software of the product through the Micro SD Card. The user puts the firmware that needs to be updated into the Micro SD Card through the computer, and then powers off the charging station, and inserts the Micro SD Card into the SD card slot as shown above. Restart the charging station. When the software version in the lower right corner of the LCD display is updated, it means that the firmware of the charging station has been updated. Then remove the Micro SD Card.

6 Troubleshooting

6.1 Indicator Status

What you see	What it means	What to do
LED ring off or green	is ready for use.	Plug charging cable into the car
LED ring yellow	charging cable connected the car successfully	Hold your charge card (RFID Card) in front of the reader
LED ring green breathing	is charging the car	The car is charging.
LED ring green	The car is fully charged.	Unplug charging cable from your car and place the charging cable back into cable holder.
LED ring red	is experiencing an error	Check the troubleshooting chapter in this manual for solutions.

6.2 Fault Code and Resolution(LCD display)

Display indication
When a problem occurs, error messages are often shown on the display. With this information you can quickly identify and investigate the problem.

Fault names	Possible reason	Troubleshooting suggestion
Over voltage	AC input voltage may be too high	1. Check the input voltage from background monitoring data
		2. If the voltage is over 480Vac in short time，wait till power grid recover to normal voltage range or Power off and restart
		3. If the fault can not be removed,please contact to us
Under voltage	AC input voltage may be too low	1. Check the input voltage from background monitoring data
		2. If the voltage is under 140Vac in short time，wait till power grid recover to normal voltage range or Power off and restart
		3. If the fault can not be removed,please contact to us
Over current	AC input current may be too big	1. Shut off distribution cabinet leakage/over current protection switch immediately
		2. Check whether there is low resistance connection between two AC output wires
		3. Eliminate above reasons,connect on power again,if the fault keep on,please contact to us
EPO fault	The emergency stop button is pressed	1. Reset emergency stop button(On the right side of the charging station)
Over Leakage	leakage current to earth may be too high	1. Shut off distribution cabinet leakage/over current protection switch immediately
		2. Check whether there is broken of AC output wires or low resistance connection to earth
		3. Eliminate above reasons,connect on power again,if the fault keep on,please contact to us
NE fault	Input/output imperfect earth or inverse connection for L/N wires	1. Shut off distribution cabinet leakage/over current protection switch immediately
		2. Check AC input/output wires if be normal,or if inverse connection input with L/N wires
		3. Eliminate above reasons,connect on power again,if the fault keep on,please contact to us

6.3 Fault Code and Resolution(LED display)

Display indication
When a problem occurs, error messages are often shown on the display. With this information you can quickly identify and investigate the problem.

Fault number	Possible reason	Troubleshooting suggestion
0001	The emergency stop button is pressed	1. Reset emergency stop button(On the right side of the charging station)
0002	AC input voltage may be too high	1. Check the input voltage from background monitoring data
		2. If the voltage is over 480Vac in short time，wait till power grid recover to normal voltage range or Power off and restart
		3. If the fault can not be removed,please contact to us
0003	AC input voltage may be too low	1. Check the input voltage from background monitoring data
		2. If the voltage is under 140Vac in short time，wait till power grid recover to normal voltage range or Power off and restart
		3. If the fault can not be removed,please contact to us
0004	AC input current may be too big	1. Shut off distribution cabinet leakage/over current protection switch immediately
		2. Check whether there is low resistance connection between two AC output wires
		3. Eliminate above reasons,connect on power again,if the fault keep on,please contact to us
0005	leakage current to earth may be too high	1. Shut off distribution cabinet leakage/over current protection switch immediately
		2. Check whether there is broken of AC output wires or low resistance connection to earth
		3. Eliminate above reasons,connect on power again,if the fault keep on,please contact to us
0006	Input/output imperfect earth or inverse connection for L/N wires	1. Shut off distribution cabinet leakage/over current protection switch immediately
		2. Check AC input/output wires if be normal,or if inverse connection input with L/N wires
		3. Eliminate above reasons,connect on power again,if the fault keep on,please contact to us

FCC Warnning:

This equipment has been tested and found to comply with the limits for a Class B digital device, pursuant to part 15 of the FCC Rules. These limits are designed to provide reasonable protection againstharmful interference in a residential installation. This equipment generates, uses and can radiateradio frequency energy and, if not installed and used in accordance with the instructions, maycause harmful interference to radio communications. However, there is no guarantee thatinterference will not occur in a particular installation. If this equipment does cause harmfulinterference to radio or television reception, which can be determined by turning the equipmentoff and on, the user is encouraged to try to correct the interference by one or more of thefollowing measures:

- Reorient or relocate the receiving antenna.
- Increase the separation between the equipment and receiver.
- Connect the equipment into an outlet on a circuit different from that to which the receiver is connected.
- Consult the dealer or an experienced radio/TV technician for help.

Caution: Any changes or modifications to this device not explicitly approved by manufacturer could void your authority to operate this equipment.

This device complies with part 15 of the FCC Rules. Operation is subject to the following two conditions:

(1)This device may not cause harmful interference, and (2) this device must accept any interference received, including interference that may cause undesired operation.

This equipment complies with FCC radiation exposure limits set forth for an uncontrolled environment. This equipment should be installed and operated with minimum distance 20cm between the radiator and your body.