FCC TEST REPORT
FCC ID: 2BB95-R39

Report Number.....:	**ZHT-230705029E**
Date of Test.....:	July 05, 2023 to Aug. 18, 2023
Date of issue.....:	Aug. 18, 2023
Test Result .....:	PASS
Testing Laboratory.....:	**Guangdong Zhonghan Testing Technology Co., Ltd.**
Address .....:	Room 104, Building 1, Yibaolai Industrial Park, Qiaotou Community, Fuhai Street, Bao'an District, Shenzhen, Guangdong, China
Applicant's name .....:	Shenzhen Jilu Technology Co., Ltd
Address .....:	Room 116, Building 1, No. 35 Guanlan Avenue, Xinhe Community, Fucheng Street, Longhua District, Shenzhen
Manufacturer's name .....:	Shenzhen Jilu Technology Co., Ltd
Address .....:	Room 116, Building 1, No. 35 Guanlan Avenue, Xinhe Community, Fucheng Street, Longhua District, Shenzhen
Test specification:	
Standard.....:	FCC CFR Title 47 Part 15 Subpart C Section 15.407
Test procedure.....:	KDB 789033 D02 v02r01 ANSI C63.10:2013
Non-standard test method .....:	N/A

This device described above has been tested by ZHT, and the test results show that the equipment under test (EUT) is in compliance with the FCC requirements. And it is applicable only to the tested sample identified in the report.
This report shall not be reproduced except in full, without the written approval of ZHT, this document may be altered or revised by ZHT, personal only, and shall be noted in the revision of the document.

Product name.....:	**Dash Camera**
Trademark .....:	N/A
Model/Type reference.....:	R39 R39-5K, R59-5K, R69-5K, R79, R80, R99, R16 Pro, R16-5K, R20, R21, D220, D320, D520, D620, J6-5K, J20, J21, J27, J35, A6 Pro, A6-5K, A33, A50, A68, A77, A80, A95, F21-5K, F39-5K, F55-5K, F66, F70, F81, F90
Ratings.....:	Input: DC 12-24V

Testing procedure and testing location:

Testing Laboratory.....:	**Guangdong Zhonghan Testing Technology Co., Ltd.**
Address.....:	Room 104, Building 1, Yibaolai Industrial Park, Qiaotou Community, Fuhai Street, Bao'an District, Shenzhen, Guangdong, China
Tested by (name + signature).....:	Leon Li
Reviewer (name + signature).....:	Baret Wu
Approved (name + signature).....:	Levi Lee

Table of Contents Page

1. VERSION 5
2. SUMMARY OF TEST RESULTS 6
2.1 TEST FACILITY 7
2.2 MEASUREMENT UNCERTAINTY 7
3. GENERAL INFORMATION 8
3.1 GENERAL DESCRIPTION OF EUT 8
3.3 BLOCK DIGRAM SHOWING THE CONFIGURATION OF SYSTEM TESTED 11
3.4 DESCRIPTION OF SUPPORT UNITS(CONDUCTED MODE) 11
3.5 EQUIPMENTS LIST FOR ALL TEST ITEMS 12
4.EMC EMISSION TEST 14
4.1 CONDUCTED EMISSION MEASUREMENT 14
4.1.1 POWER LINE CONDUCTED EMISSION Limits 14
4.1.2 TEST PROCEDURE 14
4.1.3 DEVIATION FROM TEST STANDARD 14
4.1.4 TEST SETUP 15
4.1.5 EUT OPERATING CONDITIONS 15
4.1.6 TEST RESULTS 15
4.2 RADIATED EMISSION MEASUREMENT 16
4.2.1 APPLICABLE STANDARD 16
4.2.2 CONFORMANCE LIMIT 16
4.2.3 MEASURING INSTRUMENTS 16
4.2.4 TEST CONFIGURATION 17
4.2.5 TEST PROCEDURE 18
5.POWER SPECTRAL DENSITY TEST 27
5.1 APPLIED PROCEDURES / LIMIT 27
5.2 TEST PROCEDURE 28
5.3 DEVIATION FROM STANDARD 28
5.4 TEST SETUP 28
5.5 EUT OPERATION CONDITIONS 28
5.6 TEST RESULTS 29
6. 26DB & 6DB &99% EMISSION BANDWIDTH 30
6.1 APPLIED PROCEDURES / LIMIT 30
6.2 TEST PROCEDURE ..... 错误！未定义书签。
6.3 EUT OPERATION CONDITIONS 31
6.4 TEST RESULTS 31
7.MAXIMUM CONDUCTED OUTPUT POWER 32
7.1 PPLIED PROCEDURES / LIMIT 32

Table of Contents Page

7.2 TEST PROCEDURE 32
7.3 DEVIATION FROM STANDARD 33
7.4 TEST SETUP 33
7.5 EUT OPERATION CONDITIONS 33
7.6 TEST RESULTS 33
8.OUT OF BAND EMISSIONS 34
8.1 APPLICABLE STANDARD 34
8.2 TEST PROCEDURE 34
8.3 DEVIATION FROM STANDARD 34
8.4 TEST SETUP 34
8.5 EUT OPERATION CONDITIONS 35
8.6 TEST RESULTS 35
9.SPURIOUS RF CONDUCTED EMISSIONS 36
9.1 CONFORMANCE LIMIT 36
9.2 MEASURING INSTRUMENTS 36
9.3 TEST SETUP 36
9.4 TEST PROCEDURE 36
9.5 TEST RESULTS 36
10.FREQUENCY STABILITY MEASUREMENT 37
10.1 LIMIT 37
10.2 TEST PROCEDURES 37
10.3 TEST SETUP LAYOUT 37
10.4 EUT OPERATION DURING TEST 37
10.5 TEST RESULTS 37
11.ANTENNA REQUIREMENT 38
12. TEST SETUP PHOTO 39
13. EUT CONSTRUCTIONAL DETAILS 39

1. VERSION

Report No.	Version	Description	Approved
ZHT-230705029E	Rev.01	Initial issue of report	Aug. 18, 2023

2. SUMMARY OF TEST RESULTS

Test procedures according to the technical standards:

FCC Part15 (15.407) , Subpart E			
Standard Section	Test Item	Judgment	Remark
15.209(a), 15.407 (b)(1) 15.407 (b)(4)	Spurious Radiated Emissions	PASS	
15.207	Conducted Emission	N/A	The EUT is powered by battery
15.407 (a)(12)	26 dB and 99% Emission Bandwidth	PASS	
15.407(e)	6 dB bandwidth	N/A	
15.407 (a)(1) 15.407 (a)(3)	Maximum Conducted Output Power	PASS	
2.1051, 15.407(b)(1) 15.407(b)(4)	Band Edge	PASS	
15.407 (a)(1) 15.407 (a)(3)	Power Spectral Density	PASS	
2.1051, 15.407(b)	Spurious Emissions at Antenna Terminals	PASS	
15.203	Antenna Requirement	PASS	

NOTE:

(1)" N/A" denotes test is not applicable in this Test Report

(2) The product meets the requirements of 15.407 (C) standard

Operation in the absence of information to the transmit:

While the EUT is not transmitting any information, the EUT can automatically discontinue transmission and become standby mode for power saving. The EUT can detect the controlling signal of ASK message transmitting from remote device and verify whether it shall resend or discontinue transmission. (manufacturer declare)

2.1 TEST FACILITY

Guangdong Zhonghan Testing Technology Co., Ltd.
Add. : Room 104, Building 1, Yibaolai Industrial Park, Qiaotou Community, Fuhai Street, Bao'an District Shenzhen, Guangdong, China

FCC Registration Number:255941
Designation Number: CN0325
IC Registered No.: 29832
CAB identifier: CN0143

2.2 MEASUREMENT UNCERTAINTY

The reported uncertainty of measurement y ±U, where expended uncertainty U is based on a standard uncertainty multiplied by a coverage factor of k=2, providing a level of confidence of approximately 95%.

No.	Item	Uncertainty
1	Conducted Emission Test	±1.38dB
2	RF power conducted	±0.16dB
3	Spurious emissions conducted	±0.21dB
4	All emissions radiated(9k-30MHz)	±4.68dB
5	All emissions radiated(<1G)	±4.68dB
6	All emissions radiated(>1G)	±4.89dB
7	Temperature	±0.5°C
8	Humidity	±2%
9	Occupied Bandwidth	±4.96dB

3. GENERAL INFORMATION

3.1 GENERAL DESCRIPTION OF EUT

Product Name:	Car multimedia player	
Model No.:	R39 R39-5K, R59-5K, R69-5K, R79, R80, R99, R16 Pro, R16-5K, R20, R21, D220, D320, D520, D620, J6-5K, J20, J21, J27, J35, A6 Pro, A6-5K, A33, A50, A68, A77, A80, A95, F21-5K, F39-5K, F55-5K, F66, F70, F81, F90	
Model Different:	All the model are of the same circuit and RF module, and the only difference are brand and packaging. The model R39 is the tested sample.	
Product Description	IEEE 802.11 WLAN Mode Supported	☒ 802.11a/n (20MHz channel bandwidth) ☒ 802.11n (40MHz channel bandwidth) ☒ 802.11ac (80MHz channel bandwidth)
	Data Rate	802.11a: 6,9,12,18,24,36,48,54Mbps; 802.11n(HT20/HT40):MCS0-MCS7; 802.11ac(VHT80):NSS1, MCS0-MCS9
	SU mode:	Single User mode
	Modulation	IEEE 802.11a: OFDM (64QAM, 16QAM, QPSK, BPSK) IEEE 802.11n: OFDM (64QAM, 16QAM, QPSK, BPSK) IEEE 802.11ac: OFDM (256QAM, 64QAM, 16QAM, QPSK, BPSK)
	Operating Frequency Range	☒ 5180-5240MHz for 802.11a/n(HT20)/ac20; 5190-5230MHz for 802.11n(HT40)/ac40; 5210MHz for 802.11 ac80; ☒ 5745-5825 MHz for802.11a/n(HT20)/ac20; 5755-5795 MHz for 802.11a/n(HT40)/ac40; 5775MHz for 802.11 ac80;
	Number of Channels	☒ 4 channels for 802.11a/n20/ac20 in the 5180-5240MHz band ; 2 channels for 802.11 n40/ac40 in the 5190-5230 MHz band ; 1 channels for 802.11 ac80 in the 5210MHz band ; ☒ 5 channels for 802.11a/n20/ac20 in the 5745-5825MHz band ; 2 channels for 802.11 n40/ac40 in the 5755-5795 MHz band ; 1 channels for 802.11 ac80 in the 5775MHz band ;
Channel List	Please refer to the Note 2.	
Antenna Type:	FPC Antenna	
Antenna gain:	4.75dBi	
Power supply:	Input: DC 12-24V	

Note:

For a more detailed features description, please refer to the manufacturer's specifications or the User's Manual.

802.11a/n/ac(20MHz) Frequency Channel							
Channel	Frequency (MHz)	Channel	Frequency (MHz)	Channel	Frequency (MHz)	Channel	Frequency (MHz)
36	5180	44	5220	149	5745	157	5785
40	5200	48	5240	153	5765	161	5805
165	5825						

802.11n(40MHz) Frequency Channel

802.11n /ac(40MHz)Frequency Channel							
Channel	Frequency (MHz)	Channel	Frequency (MHz)	Channel	Frequency (MHz)	Channel	Frequency (MHz)
38	5190	151	5755	-	-	-	-
46	5230	159	5795	-	-	-	-

802.11ac(80MHz) Frequency Channel	
Channel	Frequency (MHz)
42	5210
155	5775

3.2 DESCRIPTION OF TEST MODES

Transmitting mode	Keep the EUT in continuously transmitting mode

Pretest Mode	Description
Mode 1	802.11a / n 20 CH36/ CH40/ CH48/ CH149 / CH157 / CH165
Mode 2	802.11n 40 CH38/ CH46/ CH151/ CH159
Mode 3	802.11 ac80 CH42/ CH155
Mode 4	Link Mode

Conducted Emission	
Final Test Mode	Description
Mode 4	Link Mode

For Radiated Emission	
Final Test Mode	Description
Mode 1	802.11a / n 20 CH36/ CH40/ CH48/ CH149 / CH157 / CH165
Mode 2	802.11n/ 40 CH38/ CH46/ CH151/ CH159
Mode 3	802.11 ac80 CH42/ CH155

Note:

(1) The measurements are performed at all Bit Rate of Transmitter, the worst data was reported.

3.3 BLOCK DIGRAM SHOWING THE CONFIGURATION OF SYSTEM TESTED

Radiated Emission

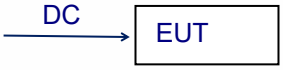

Conducted Spurious

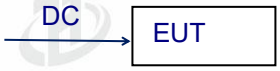

3.4 DESCRIPTION OF SUPPORT UNITS(CONDUCTED MODE)

The EUT has been tested as an independent unit together with other necessary accessories or support units. The following support units or accessories were used to form a representative test configuration during the tests.

Item	Equipment	Mfr/Brand	Model/Type No.	Series No.	Note
E-1	Car multimedia player	N/A	R39	N/A	EUT

Item	Shielded Type	Ferrite Core	Length	Note

Note:

(1) The support equipment was authorized by Declaration of Confirmation.
(2) For detachable type I/O cable should be specified the length in cm in 『Length』 column.

3.5 EQUIPMENTS LIST FOR ALL TEST ITEMS

Radiation Test equipment

Item	Equipment	Manufacturer	Model	Last Cal.	Next Cal.
1	Receiver	R&S	ESCI	Mar 12, 2023	Mar 11, 2024
2	Loop antenna	EMCI	LAP600	Mar 12, 2023	Mar 11, 2024
3	Amplifier	Schwarzbeck	BBV 9743 B	Mar 12, 2023	Mar 11, 2024
4	Amplifier	Schwarzbeck	BBV 9718 B	Mar 12, 2023	Mar 11, 2024
5	Bilog Antenna	Schwarzbeck	VULB9162	Mar 17, 2023	Mar 16, 2024
6	Horn Antenna	Schwarzbeck	BBHA9120D	Mar 17, 2023	Mar 16, 2024
7	Horn Antenna	A.H.SYSTEMS	SAS574	Mar 12, 2023	Mar 11, 2024
8	Amplifier	AEROFLEX	100KHz-40GHz	Mar 12, 2023	Mar 11, 2024
9	Spectrum Analyzer	R&S	FSV40	Mar 12, 2023	Mar 11, 2024
10	CDNE	Schwarzbeck	CDNE M2 + CDNE M3	Aug. 09, 2022	Aug. 08, 2023
11	966 Anechoic Chamber	EMToni	9m6m6m	Nov. 25, 2021	Nov. 24, 2024
12	Spectrum Analyzer	KEYSIGHT	N9020A	Mar 12, 2023	Mar 11, 2024
13	WIDBAND RADIO COMMUNICATI ON TESTER	R&S	CMW500	Mar 12, 2023	Mar 11, 2024
14	Single Generator	Agilent	N5182A	Mar 12, 2023	Mar 11, 2024
15	Power Sensor	MWRFtest	MW100-RFCB	Mar 12, 2023	Mar 11, 2024
16	Audio analyzer	R&S	UPL	Mar 12, 2023	Mar 11, 2024
17	Single Generator	R&S	SMB100A	Mar 12, 2023	Mar 11, 2024
18	Power Amplifier Shielding Room	EMToni	2m3m3m	Nov. 25, 2021	Nov. 24, 2024

Conduction Test equipment

Equipment	Manufacturer	Model	Last Cal.	Next Cal.
Receiver	R&S	ESCI	Mar 12, 2023	Mar 11, 2024
LISN	R&S	ENV216	Mar 12, 2023	Mar 11, 2024
ISN CAT 6	Schwarzbeck	NTFM 8158	Mar 12, 2023	Mar 11, 2024
ISN CAT 5	Schwarzbeck	CAT5 8158	Mar 12, 2023	Mar 11, 2024
Capacitive Voltage Probe	Schwarzbeck	CVP 9222 C	Mar 12, 2023	Mar 11, 2024
Current Transformer Clamp	Schwarzbeck	SW 9605	Mar 12, 2023	Mar 11, 2024
CE Shielding Room	EMToni	9m4m3m	Nov. 25, 2021	Nov. 24, 2024

4.EMC EMISSION TEST

4.1 CONDUCTED EMISSION MEASUREMENT

Test Requirement:	FCC Part15 C Section 15.207
Test Method:	ANSI C63.10:2013
Test Frequency Range:	150KHz to 30MHz
Receiver setup:	RBW=9KHz, VBW=30KHz, Sweep time=auto

4.1.1 POWER LINE CONDUCTED EMISSION Limits

FREQUENCY (MHz)	Limit (dBuV)		Standard
	Quasi-peak	Average	
0.15 -0.5	66 - 56 *	56 - 46 *	FCC
0.50 -5.0	56.00	46.00	FCC
5.0 -30.0	60.00	50.00	FCC

Note:

(1) *Decreases with the logarithm of the frequency.

4.1.2 TEST PROCEDURE

a. The EUT was placed 0.8 meters from the horizontal ground plane with EUT being connected to the power mains through a line impedance stabilization network (LISN). All other support equipments powered from additional LISN(s). The LISN provide 50 Ohm/ 50uH of coupling impedance for the measuring instrument.

b. Interconnecting cables that hang closer than 40 cm to the ground plane shall be folded back and forth in the center forming a bundle 30 to 40 cm long.

c. I/O cables that are not connected to a peripheral shall be bundled in the center. The end of the cable may be terminated, if required, using the correct terminating impedance. The overall length shall not exceed 1 m.

d. LISN at least 80 cm from nearest part of EUT chassis.

e. For the actual test configuration, please refer to the related Item –EUT Test Photos.

4.1.3 DEVIATION FROM TEST STANDARD

No deviation

4.1.4 TEST SETUP

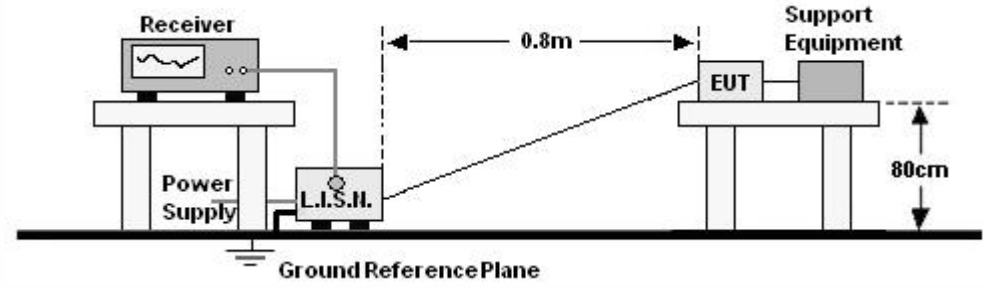

4.1.5 EUT OPERATING CONDITIONS

The EUT was configured for testing in a typical fashion (as a customer would normally use it). The EUT has been programmed to continuously transmit during test. This operating condition was tested and used to collect the included data.

4.1.6 TEST RESULTS

N/A

The EUT is powered by battery.

4.2 RADIATED EMISSION MEASUREMENT

4.2.1 APPLICABLE STANDARD

According to FCC Part 15.407(d) and 15.209

4.2.2 CONFORMANCE LIMIT

According to FCC Part 15.407(b)(7): radiated emissions which fall in the restricted bands, as defined in §15.205(a), must also comply with the radiated emission limits specified in §15.209(a) (see §15.205(c)).
According to FCC Part15.205, Restricted bands

MHz	MHz	MHz	GHz
0.090-0.110	16.42-16.423	399.9-410	4.5-5.15
10.495-0.505	16.69475-16.69525	608-614	5.35-5.46
2.1735-2.1905	16.80425-16.80475	960-1240	7.25-7.75
4.125-4.128	25.5-25.67	1300-1427	8.025-8.5
4.17725-4.17775	37.5-38.25	1435-1626.5	9.0-9.2
4.20725-4.20775	73-74.6	1645.5-1646.5	9.3-9.5
6.215-6.218	74.8-75.2	1660-1710	10.6-12.7
6.26775-6.26825	123-138	2200-2300	14.47-14.5
8.291-8.294	149.9-150.05	2310-2390	15.35-16.2
8.362-8.366	156.52475-156.52525	2483.5-2500	17.7-21.4
8.37625-8.38675	156.7-156.9	2690-2900	22.01-23.12
8.41425-8.41475	162.0125-167.17	3260-3267	23.6-24.0
12.29-12.293	167.72-173.2	3332-3339	31.2-31.8
12.51975-12.52025	240-285	3345.8-3358	36.43-36.5
12.57675-12.57725	322-335.4	3600-4400	(2)
13.36-13.41			

20dBc in any 100 kHz bandwidth outside the operating frequency band. In case the emission fall within the restricted band specified on 15.205(a), then the 15.209(a) limit in the table below has to be followed.

Restricted Frequency(MHz)	Field Strength (μV/m)	Field Strength (dBμV/m)	Measurement Distance
0.009~0.490	2400/F(KHz)	20 log (uV/m)	300
0.490~1.705	2400/F(KHz)	20 log (uV/m)	30
1.705~30.0	30	29.5	30
30-88	100	40	3
88-216	150	43.5	3
216-960	200	46	3
Above 960	500	54	3

Limits of Radiated Emission Measurement(Above 1000MHz)

Frequency(MHz)	Class B (dBuV/m) (at 3M)	
	PEAK	AVERAGE
Above 1000	74	54

Remark :1. Emission level in dBuV/m=20 log (uV/m)
2. Measurement was performed at an antenna to the closed point of EUT distance of meters.
3. Distance extrapolation factor =40log(Specific distance/ test distance)(dB);
Limit line=Specific limits(dBuV) + distance extrapolation factor.

4.2.3 MEASURING INSTRUMENTS

The Measuring equipment is listed in the section 6.3 of this test report.

4.2.4 TEST CONFIGURATION

1.For radiated emissions below 30MHz

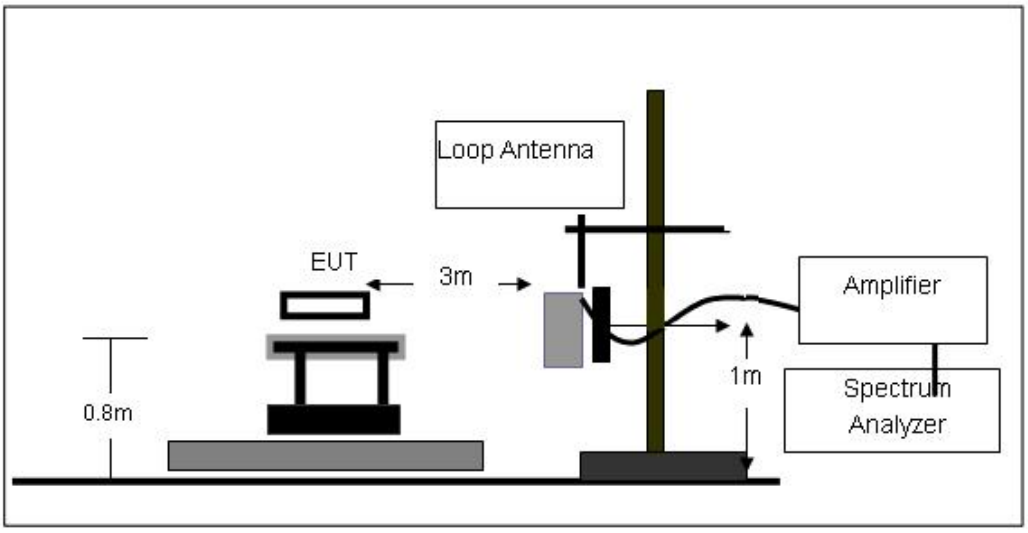

2.For radiated emissions from 30MHz to 1000MHz

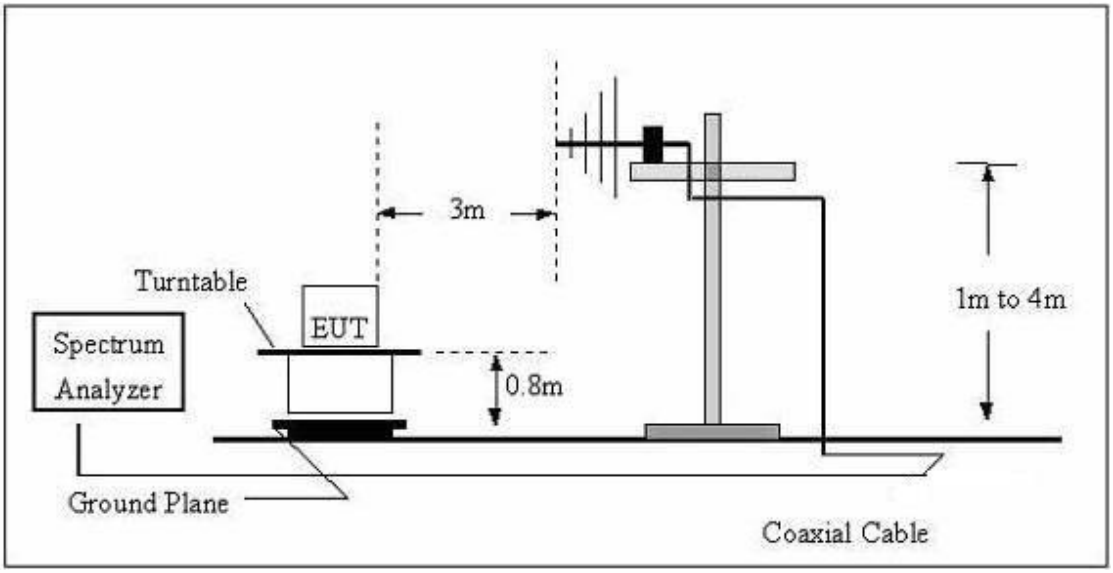

3. Radiated Emission Test-Up Frequency Above 1GHz

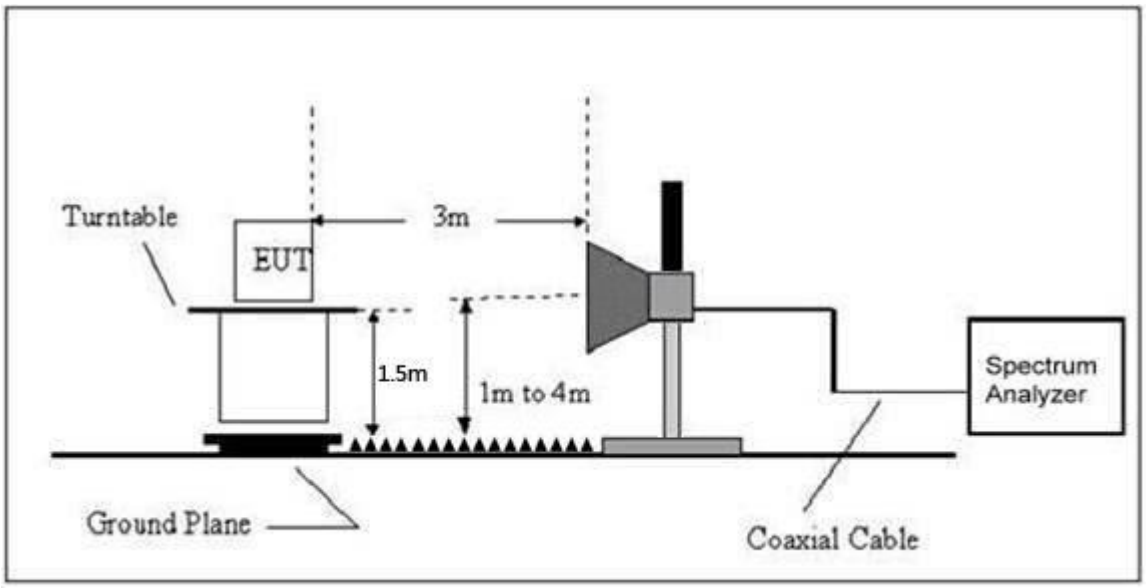

4.2.5 TEST PROCEDURE

The test site semi-anechoic chamber has met the requirement of NSA tolerance 4 dB according to the standards: ANSI C63.10-2013. The test distance is 3m.The setup is according to the requirements in Section 13.1.4.1 of ANSI C63.10-2013 and CAN/CSA-CEI/IEC CISPR 22.
This test is required for any spurious emission that falls in a Restricted Band, as defined in Section 15.205. It must be performed with the highest gain of each type of antenna proposed for use with the EUT.
Use the following spectrum analyzer settings:

Spectrum Parameter	Setting
Attenuation	Auto
Start Frequency	1000 MHz
Stop Frequency	10th carrier harmonic
RB / VB (emission in restricted band)	1 MHz / 1 MHz for Peak, 1 MHz / 10Hz for Average

Receiver Parameter	Setting
Attenuation	Auto
Start ~ Stop Frequency	9kHz~150kHz / RB 200Hz for QP
Start ~ Stop Frequency	150kHz~30MHz / RB 9kHz for QP
Start ~ Stop Frequency	30MHz~1000MHz / RB 120kHz for QP

a. The measuring distance of at 3 m shall be used for measurements at frequency up to 1GHz. For frequencies above 1GHz, any suitable measuring distance may be used.
b. The EUT was placed on the top of a rotating table 0.8 m for below 1GHz and 1.5m for above 1GHz the ground at a 3 meter. The table was rotated 360 degrees to determine the position of the highest radiation.
c. The height of the equipment or of the substitution antenna shall be 0.8 m for below 1GHz and 1.5m for above 1GHz; the height of the test antenna shall vary between 1 m to 4 m. Both horizontal and vertical polarizations of the antenna are set to make the measurement.
d. The initial step in collecting conducted emission data is a spectrum analyzer peak detector mode pre-scanning the measurement frequency range. Significant peaks are then marked and then Quasi Peak detector mode re-measured.
e. If the Peak Mode measured value compliance with and lower than Quasi Peak Mode Limit, the EUT shall be deemed to meet QP Limits and then no additional QP Mode measurement performed.
f. For the actual test configuration, please refer to the related Item –EUT Test Photos.

Note:

Both horizontal and vertical antenna polarities were tested
and performed pretest to three orthogonal axis. The worst case emissions were reported

During the radiated emission test, the Spectrum Analyzer was set with the following configurations:

Frequency Band (MHz)	Function	Resolution bandwidth	Video Bandwidth
30 to 1000	QP	120 kHz	300 kHz
Above 1000	Peak	1 MHz	1 MHz
	Average	1 MHz	10 Hz

Note: for the frequency ranges below 30 MHz, a narrower RBW is used for these ranges but the measured value should add a RBW correction factor (RBWCF) where RBWCF [dB] =10*lg(100 [kHz]/narrower RBW [kHz]). , the narrower RBW is 1 kHz and RBWCF is 20 dB for the frequency 9 kHz to 150 kHz, and the narrower RBW is 10 kHz and RBWCF is 10 dB for the frequency 150 kHz to 30 MHz.

4.2.6 TEST RESULT(Between 9KHz – 30MHz)

The emission from 9 kHz to 30MHz was pre-tested and found the result was 20dB lower than the limit, and according to 15.31(o) & RSS-Gen 6.13, the test result no need to reported.

Between 30MHz – 1GHz

Temperature:	25.4℃	Relative Humidity:	55%
Pressure:	101 kPa	Polarization:	Horizontal
Test Voltage:	DC 12V		

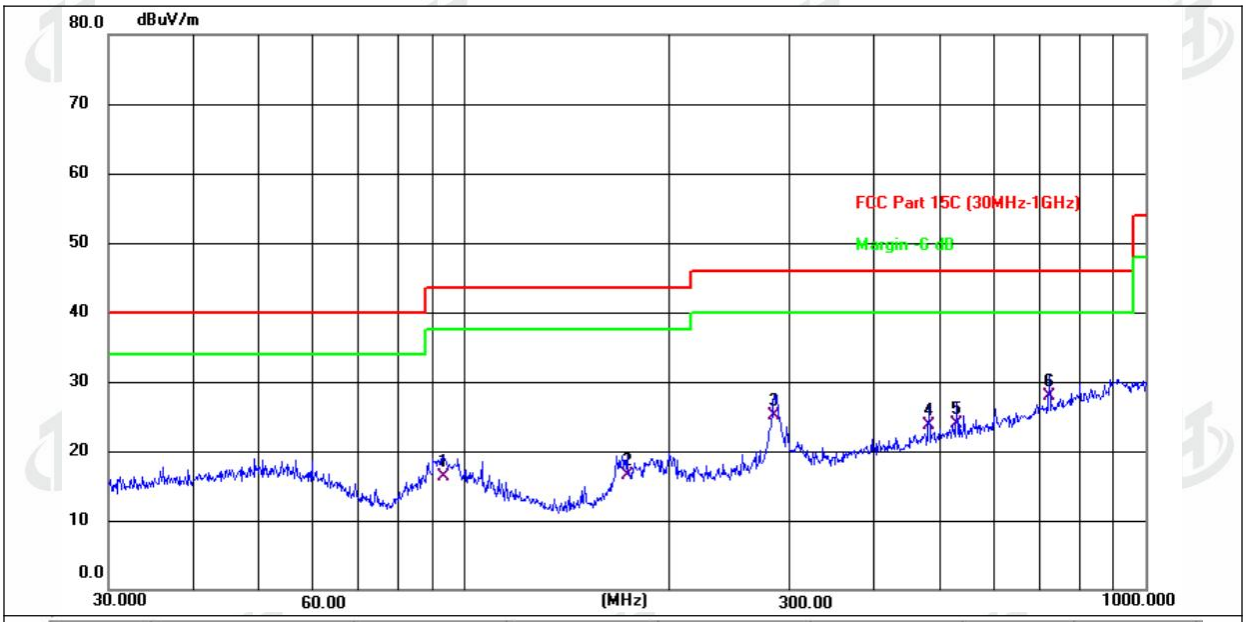

No.	Frequency (MHz)	Reading (dBuV)	Factor (dB/m)	Level (dBuV/m)	Limit (dBuV/m)	Margin (dB)	Detector
1	93.1131	28.08	-11.71	16.37	43.50	-27.13	QP
2	173.2050	29.01	-12.46	16.55	43.50	-26.95	QP
3	284.9767	33.26	-8.08	25.18	46.00	-20.82	QP
4	480.5276	27.96	-4.35	23.61	46.00	-22.39	QP
5	528.2458	27.32	-3.49	23.83	46.00	-22.17	QP
6 *	721.7258	27.90	0.10	28.00	46.00	-18.00	QP

Temperature:	25.4℃	Relative Humidity:	55%
Pressure:	101kPa	Polarization:	Vertical
Test Voltage:	DC 12V		

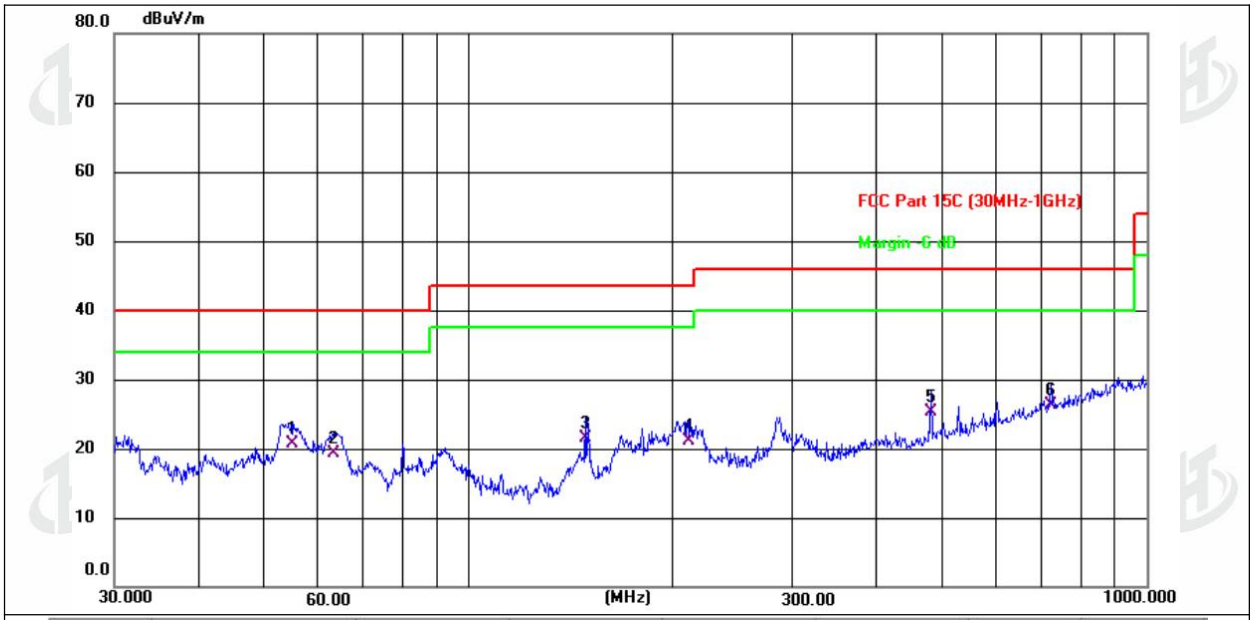

No.	Frequency (MHz)	Reading (dBuV)	Factor (dB/m)	Level (dBuV/m)	Limit (dBuV/m)	Margin (dB)	Detector
1 *	54.8348	29.43	-8.82	20.61	40.00	-19.39	QP
2	63.0916	29.50	-10.23	19.27	40.00	-20.73	QP
3	148.4410	35.37	-13.84	21.53	43.50	-21.97	QP
4	210.7860	31.11	-10.06	21.05	43.50	-22.45	QP
5	480.5276	29.62	-4.35	25.27	46.00	-20.73	QP
6	721.7258	26.21	0.10	26.31	46.00	-19.69	QP

Remarks:
1.Final Level =Receiver Read level + Antenna Factor + Cable Loss – Preamplifier Factor
2.The emission levels of other frequencies are very lower than the limit and not show in test report.
3.5.2G and 5.8G All modes have been tested, The test data shows only the worst case 5.2G 802.11a mode

Between1GHz – 40GHz

Temperature :	25.4℃	Relative Humidity:	55%
Pressure :	1010 hPa	Test Voltage :	DC 12V
Test Mode :	5.2G TX- 802.11a		

802.11a

Polar (H/V)	Frequency (MHz)	Meter Reading (dBuV)	Pre-amplifier (dB)	Cable Loss (dB)	Antenna Factor (dB)	Emission Level (dBuV/m)	Limits (dBuV/m)	Margin (dB)	Detector Type
Low Channel:5180MHz									
V	10360.00	61.49	30.55	5.77	24.66	61.37	74	-12.63	PK
V	10360.00	43.95	30.55	5.77	24.66	43.83	54	-10.17	AV
V	15540.00	54.46	30.33	6.32	24.55	55	74	-19	PK
V	15540.00	37.18	30.33	6.32	24.55	37.72	54	-16.28	AV
V	20720.00	50.51	30.85	7.45	24.69	51.8	74	-22.2	PK
V	20720.00	35.03	30.85	7.45	24.69	36.32	54	-17.68	AV
V	25900.00	55.97	31.02	8.99	25.57	59.51	74	-14.49	PK
V	25900.00	39.23	31.02	8.99	25.57	42.77	54	-11.23	AV
H	10360.00	54.59	30.55	5.77	24.66	54.47	74	-19.53	PK
H	10360.00	36.38	30.55	5.77	24.66	36.26	54	-17.74	AV
H	15540.00	51.07	30.33	6.32	24.55	51.61	74	-22.39	PK
H	15540.00	35.57	30.33	6.32	24.55	36.11	54	-17.89	AV
H	20720.00	48.48	30.85	7.45	24.69	49.77	74	-24.23	PK
H	20720.00	35.84	30.85	7.45	24.69	37.13	54	-16.87	AV
H	25900.00	46.89	31.02	8.99	25.57	50.43	74	-23.57	PK
H	25900.00	33.73	31.02	8.99	25.57	37.27	54	-16.73	AV

Polar (H/V)	Frequency (MHz)	Meter Reading (dBuV)	Pre-amplifier (dB)	Cable Loss (dB)	Antenna Factor (dB)	Emission Level (dBuV/m)	Limits (dBuV/m)	Margin (dB)	Detector Type
Middle Channel:5200MHz									
V	10400.00	60.57	30.55	5.77	24.66	60.45	74	-13.55	PK
V	10400.00	43.48	30.55	5.77	24.66	43.36	54	-10.64	AV
V	15600.00	54.15	30.33	6.32	24.55	54.69	74	-19.31	PK
V	15600.00	37.29	30.33	6.32	24.55	37.83	54	-16.17	AV
V	20800.00	51.07	30.85	7.45	24.69	52.36	74	-21.64	PK
V	20800.00	34.06	30.85	7.45	24.69	35.35	54	-18.65	AV
V	26000.00	55.92	31.02	8.99	25.57	59.46	74	-14.54	PK
V	26000.00	37.79	31.02	8.99	25.57	41.33	54	-12.67	AV
H	10400.00	54.31	30.55	5.77	24.66	54.19	74	-19.81	PK
H	10400.00	37.95	30.55	5.77	24.66	37.83	54	-16.17	AV
H	15600.00	50.52	30.33	6.32	24.55	51.06	74	-22.94	PK
H	15600.00	37.11	30.33	6.32	24.55	37.65	54	-16.35	AV
H	20800.00	49.27	30.85	7.45	24.69	50.56	74	-23.44	PK
H	20800.00	35.45	30.85	7.45	24.69	36.74	54	-17.26	AV
H	26000.00	47.51	31.02	8.99	25.57	51.05	74	-22.95	PK
H	26000.00	33.21	31.02	8.99	25.57	36.75	54	-17.25	AV

Polar (H/V)	Frequency (MHz)	Meter Reading (dBuV)	Pre-amplifier (dB)	Cable Loss (dB)	Antenna Factor (dB)	Emission Level (dBuV/m)	Limits (dBuV/m)	Margin (dB)	Detector Type
High Channel:5240MHz									
V	10480.00	58.78	30.55	5.77	24.66	58.66	74	-15.34	PK
V	10480.00	42.76	30.55	5.77	24.66	42.64	54	-11.36	AV
V	15720.00	53.71	30.33	6.32	24.55	54.25	74	-19.75	PK
V	15720.00	37.62	30.33	6.32	24.55	38.16	54	-15.84	AV
V	20960.00	51.22	30.85	7.45	24.69	52.51	74	-21.49	PK
V	20960.00	35.69	30.85	7.45	24.69	36.98	54	-17.02	AV
V	26200.00	56.07	31.02	8.99	25.57	59.61	74	-14.39	PK
V	26200.00	38.34	31.02	8.99	25.57	41.88	54	-12.12	AV
H	10480.00	54.29	30.55	5.77	24.66	54.17	74	-19.83	PK
H	10480.00	36.85	30.55	5.77	24.66	36.73	54	-17.27	AV
H	15720.00	50.28	30.33	6.32	24.55	50.82	74	-23.18	PK
H	15720.00	35.14	30.33	6.32	24.55	35.68	54	-18.32	AV
H	20960.00	49.33	30.85	7.45	24.69	50.62	74	-23.38	PK
H	20960.00	35.43	30.85	7.45	24.69	36.72	54	-17.28	AV
H	26200.00	46.57	31.02	8.99	25.57	50.11	74	-23.89	PK
H	26200.00	33.26	31.02	8.99	25.57	36.80	54	-17.20	AV

Temperature :	25.4℃	Relative Humidity:	55%
Pressure :	1010 hPa	Test Voltage :	DC 12V
Test Mode :	5.8G TX- 802.11a		

802.11a

Polar (H/V)	Frequency (MHz)	Meter Reading (dBuV)	Pre-amplifier (dB)	Cable Loss (dB)	Antenna Factor (dB)	Emission Level (dBuV/m)	Limits (dBuV/m)	Margin (dB)	Detector Type
Low Channel:5745MHz									
V	11490.00	58.27	30.55	5.77	24.66	58.15	74	-15.85	PK
V	11490.00	43.17	30.55	5.77	24.66	43.05	54	-10.95	AV
V	17235.00	54.16	30.33	6.32	24.55	54.7	74	-19.3	PK
V	17235.00	36.34	30.33	6.32	24.55	36.88	54	-17.12	AV
V	22980.00	51.14	30.85	7.45	24.69	52.43	74	-21.57	PK
V	22980.00	34.20	30.85	7.45	24.69	35.49	54	-18.51	AV
V	28725.00	55.85	31.02	8.99	25.57	59.39	74	-14.61	PK
V	28725.00	38.22	31.02	8.99	25.57	41.76	54	-12.24	AV
H	11490.00	55.10	30.55	5.77	24.66	54.98	74	-19.02	PK
H	11490.00	37.55	30.55	5.77	24.66	37.43	54	-16.57	AV
H	17235.00	50.83	30.33	6.32	24.55	51.37	74	-22.63	PK
H	17235.00	35.60	30.33	6.32	24.55	36.14	54	-17.86	AV
H	22980.00	48.13	30.85	7.45	24.69	49.42	74	-24.58	PK
H	22980.00	34.58	30.85	7.45	24.69	35.87	54	-18.13	AV
H	28725.00	47.50	31.02	8.99	25.57	51.04	74	-22.96	PK
H	28725.00	33.04	31.02	8.99	25.57	36.58	54	-17.42	AV

Polar (H/V)	Frequency (MHz)	Meter Reading (dBuV)	Pre-amplifier (dB)	Cable Loss (dB)	Antenna Factor (dB)	Emission Level (dBuV/m)	Limits (dBuV/m)	Margin (dB)	Detector Type
Middle Channel:5785MHz									
V	11570.00	59.69	30.55	5.77	24.66	59.57	74	-14.43	PK
V	11570.00	44.38	30.55	5.77	24.66	44.26	54	-9.74	AV
V	17355.00	52.76	30.33	6.32	24.55	53.3	74	-20.7	PK
V	17355.00	36.83	30.33	6.32	24.55	37.37	54	-16.63	AV
V	23140.00	51.78	30.85	7.45	24.69	53.07	74	-20.93	PK
V	23140.00	34.03	30.85	7.45	24.69	35.32	54	-18.68	AV
V	28925.00	55.77	31.02	8.99	25.57	59.31	74	-14.69	PK
V	28925.00	38.80	31.02	8.99	25.57	42.34	54	-11.66	AV
H	11570.00	55.02	30.55	5.77	24.66	54.9	74	-19.1	PK
H	11570.00	38.57	30.55	5.77	24.66	38.45	54	-15.55	AV
H	17355.00	51.53	30.33	6.32	24.55	52.07	74	-21.93	PK
H	17355.00	35.89	30.33	6.32	24.55	36.43	54	-17.57	AV
H	23140.00	49.31	30.85	7.45	24.69	50.6	74	-23.4	PK
H	23140.00	35.32	30.85	7.45	24.69	36.61	54	-17.39	AV
H	28925.00	47.75	31.02	8.99	25.57	51.29	74	-22.71	PK
H	28925.00	32.87	31.02	8.99	25.57	36.41	54	-17.59	AV

Polar (H/V)	Frequency (MHz)	Meter Reading (dBuV)	Pre-amplifier (dB)	Cable Loss (dB)	Antenna Factor (dB)	Emission Level (dBuV/m)	Limits (dBuV/m)	Margin (dB)	Detector Type
High Channel:5825MHz									
V	11650.00	62.11	30.55	5.77	24.66	61.99	74	-12.01	PK
V	11650.00	43.88	30.55	5.77	24.66	43.76	54	-10.24	AV
V	17475.00	54.82	30.33	6.32	24.55	55.36	74	-18.64	PK
V	17475.00	37.44	30.33	6.32	24.55	37.98	54	-16.02	AV
V	23300.00	50.39	30.85	7.45	24.69	51.68	74	-22.32	PK
V	23300.00	36.25	30.85	7.45	24.69	37.54	54	-16.46	AV
V	29125.00	55.62	31.02	8.99	25.57	59.16	74	-14.84	PK
V	29125.00	37.70	31.02	8.99	25.57	41.24	54	-12.76	AV
H	11650.00	54.00	30.55	5.77	24.66	53.88	74	-20.12	PK
H	11650.00	37.50	30.55	5.77	24.66	37.38	54	-16.62	AV
H	17475.00	50.22	30.33	6.32	24.55	50.76	74	-23.24	PK
H	17475.00	35.84	30.33	6.32	24.55	36.38	54	-17.62	AV
H	23300.00	49.43	30.85	7.45	24.69	50.72	74	-23.28	PK
H	23300.00	34.52	30.85	7.45	24.69	35.81	54	-18.19	AV
H	29125.00	47.83	31.02	8.99	25.57	51.37	74	-22.63	PK
H	29125.00	32.65	31.02	8.99	25.57	36.19	54	-17.81	AV

Remark:
1. Emission Level = Meter Reading + Antenna Factor + Cable Loss – Pre-amplifier,
Margin= Emission Level - Limit
2. If peak below the average limit, the average emission was no test.
3. The amplitude of spurious emissions which are attenuated by more than 20dB below the permissible value has no need to be reported.
4. All modes have been tested,The worst mode is 802.11a, only the worst data is recorded.

RADIATED Band EMISSION MEASUREMENT

	Polar (H/V)	Frequency (MHz)	Meter Reading (dBuV)	Pre-amplifier (dB)	Cable Loss (dB)	Antenna Factor (dB/m)	Emission level (dBuV/m)	Limit (dBuV/m)	Margin(dB)	Detector Type	Result
802.11a	Low Channel 5180MHz										
	H	5141.5	59.93	30.22	4.85	23.98	58.54	74	-15.46	PK	PASS
	H	5141.5	47.83	30.22	4.85	23.98	46.44	54	-7.56	AV	PASS
	H	5150	61.32	30.22	4.85	23.98	59.93	74	-14.07	PK	PASS
	H	5150	49.39	30.22	4.85	23.98	48.00	54	-6.00	AV	PASS
	V	5141.5	58.91	30.22	4.85	23.98	57.52	74	-16.48	PK	PASS
	V	5141.5	48.34	30.22	4.85	23.98	46.95	54	-7.05	AV	PASS
	V	5150	60.70	30.22	4.85	23.98	59.31	74	-14.69	PK	PASS
	V	5150	49.71	30.22	4.85	23.98	48.32	54	-5.68	AV	PASS
	High Channel 5240MHz										
	H	5350	58.93	30.22	4.85	23.98	57.54	74	-16.46	PK	PASS
	H	5350	47.47	30.22	4.85	23.98	46.08	54	-7.92	AV	PASS
	H	5410	61.81	30.22	4.85	23.98	60.42	74	-13.58	PK	PASS
	H	5410	50.21	30.22	4.85	23.98	48.82	54	-5.18	AV	PASS
	V	5350	59.65	30.22	4.85	23.98	58.26	74	-15.74	PK	PASS
	V	5350	48.51	30.22	4.85	23.98	47.12	54	-6.88	AV	PASS
	V	5410	59.03	30.22	4.85	23.98	57.64	74	-16.36	PK	PASS
	V	5410	48.12	30.22	4.85	23.98	46.73	54	-7.27	AV	PASS

	Polar (H/V)	Frequency (MHz)	Meter Reading (dBuV)	Pre-amplifier (dB)	Cable Loss (dB)	Antenna Factor (dB/m)	Emission level (dBuV/m)	Limit (dBuV/m)	Margin(dB)	Detector Type	Result
802.11a	Low Channel 5745MHz										
	H	5650	60.24	30.22	4.85	23.98	58.85	74	-15.15	PK	PASS
	H	5650	48.03	30.22	4.85	23.98	46.64	54	-7.36	AV	PASS
	H	5725	61.28	30.22	4.85	23.98	59.89	74	-14.11	PK	PASS
	H	5725	49.59	30.22	4.85	23.98	48.2	54	-5.8	AV	PASS
	V	5650	58.96	30.22	4.85	23.98	57.57	74	-16.43	PK	PASS
	V	5650	48.35	30.22	4.85	23.98	46.96	54	-7.04	AV	PASS
	V	5725	60.67	30.22	4.85	23.98	59.28	74	-14.72	PK	PASS
	V	5725	48.15	30.22	4.85	23.98	46.76	54	-7.24	AV	PASS
	High Channel 5825MHz										
	H	5850	58.99	30.22	4.85	23.98	57.6	74	-16.4	PK	PASS
	H	5850	47.56	30.22	4.85	23.98	46.17	54	-7.83	AV	PASS
	H	5916.4	62.04	30.22	4.85	23.98	60.65	74	-13.35	PK	PASS
	H	5916.4	50.49	30.22	4.85	23.98	49.1	54	-4.9	AV	PASS
	V	5850	60.04	30.22	4.85	23.98	58.65	74	-15.35	PK	PASS
	V	5850	48.38	30.22	4.85	23.98	46.99	54	-7.01	AV	PASS
	V	5916.4	59.12	30.22	4.85	23.98	57.73	74	-16.27	PK	PASS
	V	5916.4	48.40	30.22	4.85	23.98	47.01	54	-6.99	AV	PASS

Remark:
1. Emission Level = Meter Reading + Antenna Factor + Cable Loss – Pre-amplifier,
Margin= Emission Level - Limit
2. If peak below the average limit, the average emission was no test.
3. The amplitude of spurious emissions which are attenuated by more than 20dB below the permissible value has no need to be reported.
4. All modes have been tested,The worst mode is 802.11a, only the worst data is recorded.

5.POWER SPECTRAL DENSITY TEST

5.1 APPLIED PROCEDURES / LIMIT

According to FCC §15.407(3)

Power limits:

(1) For the band 5.15-5.25 GHz.

(i) For an outdoor access point operating in the band 5.15-5.25 GHz, the maximum power spectral density shall not exceed 17 dBm in any 1 megahertz band. If transmitting antennas of directional gain greater than 6 dBi are used, both the maximum conducted output power and the maximum power spectral density shall be reduced by the amount in dB that the directional gain of the antenna exceeds 6 dBi. The maximum e.i.r.p. at any elevation angle above 30 degrees as measured from the horizon must not exceed 125 mW (21 dBm).

(ii) For an indoor access point operating in the band 5.15-5.25 GHz, the maximum power spectral density shall not exceed 17 dBm in any 1 megahertz band. If transmitting antennas of directional gain greater than 6 dBi are used, both the maximum conducted output power and the maximum power spectral density shall be reduced by the amount in dB that the directional gain of the antenna exceeds 6 dBi.

(iii) For fixed point-to-point access points operating in the band 5.15-5.25 GHz, the maximum power spectral density shall not exceed 17 dBm in any 1 megahertz band. Fixed point-to-point U-NII devices may employ antennas with directional gain up to 23 dBi without any corresponding reduction in the maximum conducted output power or maximum power spectral density. For fixed point-to-point transmitters that employ a directional antenna gain greater than 23 dBi, a 1 dB reduction in maximum conducted output power and maximum power spectral density is required for each 1 dB of antenna gain in excess of 23 dBi. Fixed, point-to-point operations exclude the use of point-to-multipoint systems, omnidirectional applications, and multiple collocated transmitters transmitting the same information. The operator of the U-NII device, or if the equipment is professionally installed, the installer, is responsible for ensuring that systems employing high gain directional antennas are used exclusively for fixed, point-to-point operations.

(iv) For client devices in the 5.15-5.25 GHz band, the maximum power spectral density shall not exceed 11 dBm in any 1 megahertz band. If transmitting antennas of directional gain greater than 6 dBi are used, both the maximum conducted output power and the maximum power spectral density shall be reduced by the amount in dB that the directional gain of the antenna exceeds 6 dBi.

(2) For the 5.25-5.35 GHz and 5.47-5.725 GHz bands, the maximum conducted output power over the frequency bands of operation shall not exceed the lesser of 250 mW or 11 dBm + 10 log B, where B is the 26 dB emission bandwidth in megahertz. In addition, the maximum power spectral density shall not exceed 11 dBm in any 1 megahertz band. If transmitting antennas of directional gain greater than 6 dBi are used, both the maximum conducted output power and the maximum power spectral density shall be reduced by the amount in dB that the directional gain of the antenna exceeds 6 dBi.

(3) For the band 5.725-5.85 GHz, the maximum conducted output power over the frequency band of operation shall not exceed 1 W. In addition, the maximum power spectral density shall not exceed 30 dBm in any 500-kHz band. If transmitting antennas of directional gain greater than 6 dBi are used, both the maximum conducted output power and the maximum power spectral density shall be reduced by the amount in dB that the directional gain of the antenna exceeds 6 dBi. However, fixed point-to-point U-NII devices operating in this band may employ transmitting antennas with directional gain greater than 6 dBi without any corresponding reduction in transmitter conducted power. Fixed, point-to-point operations exclude the use of point-to-multipoint systems, omnidirectional applications, and multiple collocated transmitters transmitting the same information. The operator of the U-NII device, or if the equipment is professionally installed, the installer, is responsible for ensuring that systems employing high gain directional antennas are used exclusively for fixed, point-to-point operations.

5.2 TEST PROCEDURE

For devices operating in the bands 5.15-5.25 GHz, 5.25-5.35 GHz, and 5.47-5.725 GHz, the above procedures make use of 1 MHz RBW to satisfy directly the 1 MHz reference bandwidth specified in § 15.407(a)(5). For devices operating in the band 5.725-5.85 GHz, the rules specify a measurement bandwidth of 500 kHz. Many spectrum analyzers do not have 500 kHz RBW, thus a narrower RBW may need to be used. The rules permit the use of a RBWs less than 1 MHz, or 500 kHz, "provided that the measured power is integrated over the full reference bandwidth" to show the total power over the specified measurement bandwidth (i.e., 1 MHz, or 500 kHz). If measurements are performed using a reduced resolution bandwidth (< 1 MHz, or <500 kHz) and integrated over 1 MHz, or 500 KHz bandwidth, the following adjustments to the procedures apply:

a) Set RBW ≥ 1/T, where T is defined in section II.B.I.a).

b) Set VBW ≥ 3 RBW.

c) If measurement bandwidth of Maximum PSD is specified in 500 kHz, add 10log(500kHz/RBW) to the measured result, whereas RBW (< 500 KHz) is the reduced resolution bandwidth of the spectrum analyzer set during measurement.

d) If measurement bandwidth of Maximum PSD is specified in 1 MHz, add 10log(1MHz/RBW) to the measured result, whereas RBW (< 1 MHz) is the reduced resolution bandwidth of spectrum analyzer set during measurement.

e) Care must be taken to ensure that the measurements are performed during a period of continuous transmission or are corrected upward for duty cycle.

Note: As a practical matter, it is recommended to use reduced RBW of 100 KHz for the sections 5.c) and 5.d) above, since RBW=100 KHZ is available on nearly all spectrum analyzers.

5.3 DEVIATION FROM STANDARD

No deviation.

5.4 TEST SETUP

5.5 EUT OPERATION CONDITIONS

The EUT tested system was configured as the statements of 2.1 Unless otherwise a special operating condition is specified in the follows during the testing.

5.6 TEST RESULTS

Temperature :	25.1℃	Relative Humidity:	54%
Pressure :	1015 hPa	Test Voltage :	DC 12V
Test Mode :	TX		
5.2G (5180-5240MHz) :	Please refer to the Appendix A.5 for 5G WIFI RF Test Data.		
5.8G(5745-5825 MHz):	Please refer to the Appendix B.5 for 5G WIFI RF Test Data.		

6. 26DB & 6DB &99% EMISSION BANDWIDTH

6.1 APPLIED PROCEDURES / LIMIT

The maximum power spectral density is measured as a conducted emission by direct connection of a calibrated test instrument to the equipment under test. If the device cannot be connected directly, alternative techniques acceptable to the Commission may be used. Measurements in the 5.725-5.85 GHz band, the minimum bandwidth 6 dB bandwidth of U-NII devices shall be at least 500KHz. Measurements in the 5.15-5.25 GHz, 5.25-5.35 GHz, and the 5.47-5.725 GHz bands are made over a bandwidth of 1 MHz or the 26 dB emission bandwidth of the device, whichever is less. A narrower resolution bandwidth can be used, provided that the measured power is integrated over the full reference bandwidth.

The following procedure shall be used for measuring (6 dB) power bandwidth:

a) Set RBW = 100KHz.

b) Set the VBW > RBW.

c) Detector = Peak.

d) Trace mode = max hold.

e) Measure the maximum width of the emission that is constrained by the frequencies associated with the two outermost amplitude points (upper and lower frequencies) that are attenuated by 6 dB relative to the maximum level measured in the fundamental emission.

The following procedure shall be used for measuring (99 %) power bandwidth:

1. Set center frequency to the nominal EUT channel center frequency.
2. Set span = 1.5 times to 5.0 times the OBW.
3. Set RBW = 1 % to 5 % of the OBW
4. Set VBW ≥ 3 · RBW
5. Video averaging is not permitted. Where practical, a sample detection and single sweep mode shall be used. Otherwise, peak detection and max hold mode (until the trace stabilizes) shall be used.
6. Use the 99 % power bandwidth function of the instrument (if available).
7. If the instrument does not have a 99 % power bandwidth function, the trace data points are recovered and directly summed in power units. The recovered amplitude data points, beginning at the lowest frequency, are placed in a running sum until 0.5 % of the total is reached; that frequency is recorded as the lower frequency. The process is repeated until 99.5 % of the total is reached; that frequency is recorded as the upper frequency. The 99% occupied bandwidth is the difference between these two frequencies.

The following procedure shall be used for measuring (26dB) power bandwidth:

a) Set RBW = approximately 1% of the emission bandwidth.

b) Set the VBW > RBW.

c) Detector = peak.

d) Trace mode = max hold.

e) Measure the maximum width of the emission that is 26 dB down from the peak of the emission. Compare this with the RBW setting of the instrument. Readjust RBW and repeat measurement as needed until the RBW/EBW ratio is approximately 1%.

NOTE—The automatic bandwidth measurement capability of a spectrum analyzer or an EMI receiver may be employed if it implements the functionality described in the preceding items.

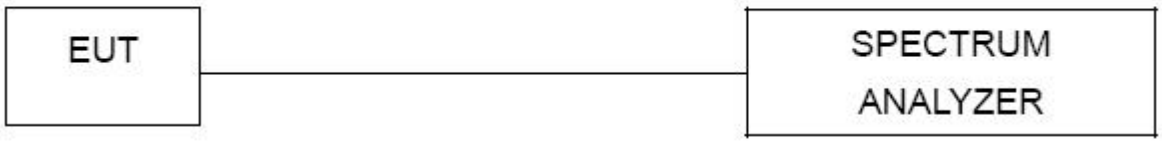

6.3 EUT OPERATION CONDITIONS

The EUT tested system was configured as the statements of 2.4 Unless otherwise a special operating condition is specified in the follows during the testing.

6.4 TEST RESULTS

Temperature :		25.1 ℃	Relative Humidity :	54%
Pressure :		101kPa	Test Voltage :	DC 12V
Test Mode :		TX		
-26dB Bandwidth	5.2G (5180-5240MHz):	Please refer to the Appendix A.3 for 5G WIFI RF Test Data.		
-6dB Bandwidth	5.8G(5745-5825 MHz):	Please refer to the Appendix B.3 for 5G WIFI RF Test Data.		
99% Bandwidth	5.2G (5180-5240MHz):	Please refer to the Appendix A.4 for 5G WIFI RF Test Data.		
	5.8G(5745-5825 MHz):	Please refer to the Appendix B.4 for 5G WIFI RF Test Data.		

7.MAXIMUM CONDUCTED OUTPUT POWER

7.1 PPLIED PROCEDURES / LIMIT

According to FCC §15.407
The maximum conduced output power should not exceed:

Frequency Band(MHz)	Limit
5150~5250	250mW
5725~5850	1W

7.2 TEST PROCEDURE

The EUT was directly connected to the Power meter

1. Device Configuration
If possible, configure or modify the operation of the EUT so that it transmits continuously at its maximum power control level (see section II.B.).
a) The intent is to test at 100 percent duty cycle; however a small reduction in duty cycle (to no lower than 98 percent) is permitted if required by the EUT for amplitude control purposes. Manufacturers are expected to provide software to the test lab to permit such continuous operation.
b) If continuous transmission (or at least 98 percent duty cycle) cannot be achieved due to hardware limitations (e.g., overheating), the EUT shall be operated at its maximum power control level with the transmit duration as long as possible and the duty cycle as high as possible.

2. Measurement using a Spectrum Analyzer or EMI Receiver (SA)
Measurement of maximum conducted output power using a spectrum analyzer requires integrating the spectrum across a frequency span that encompasses, at a minimum, either the EBW or the 99-percent occupied bandwidth of the signal.1 However, the EBW must be used to determine bandwidth dependent limits on maximum conducted output power in accordance with § 15.407(a).
a) The test method shall be selected as follows: (i) Method SA-1 or SA-1 Alternative (averaging with the EUT transmitting at full power throughout each sweep) shall be applied if either of the following conditions can be satisfied:
• The EUT transmits continuously (or with a duty cycle ≥ 98 percent).
• Sweep triggering or gating can be implemented in a way that the device transmits at the maximum power control level throughout the duration of each of the instrument sweeps to be averaged. This condition can generally be achieved by triggering the instrument's sweep if the duration of the sweep (with the analyzer configured as in Method SA-1, below) is equal to or shorter than the duration T of each transmission from the EUT and if those transmissions exhibit full power throughout their durations.
(ii) Method SA-2 or SA-2 Alternative (averaging across on and off times of the EUT transmissions, followed by duty cycle correction) shall be applied if the conditions of (i) cannot be achieved and the transmissions exhibit a constant duty cycle during the measurement duration. Duty cycle will be considered to be constant if variations are less than ± 2 percent.
(iii) Method SA-3 (RMS detection with max hold) or SA-3 Alternative (reduced VBW with max hold) shall be applied if the conditions of (i) and (ii) cannot be achieved.
b) Method SA-1 (trace averaging with the EUT transmitting at full power throughout each sweep): (i) Set span to encompass the entire emission bandwidth (EBW) (or, alternatively, the entire 99% occupied bandwidth) of the signal.
(ii) Set RBW = 1 MHz.
(iii) Set VBW ≥ 3 MHz.
(iv) Number of points in sweep ≥ 2 Span / RBW. (This ensures that bin-to-bin spacing is ≤ RBW/2, so that narrowband signals are not lost between frequency bins.)
(v) Sweep time = auto.
(vi) Detector = RMS (i.e., power averaging), if available. Otherwise, use sample detector mode.
(vii) If transmit duty cycle < 98 percent, use a video trigger with the trigger level set to enable triggering only on full power pulses. Transmitter must operate at maximum power control level for the entire duration of every sweep. If the EUT transmits continuously (i.e., with no off intervals) or at duty cycle ≥ 98 percent, and if each transmission is entirely at the maximum power control level, then the trigger shall be set to "free run".
(viii) Trace average at least 100 traces in power averaging (i.e., RMS) mode.

(ix) Compute power by integrating the spectrum across the EBW (or, alternatively, the entire 99% occupied bandwidth) of the signal using the instrument's band power measurement function with band limits set equal to the EBW (or occupied bandwidth) band edges. If the instrument does not have a band power function, sum the spectrum

7.3 DEVIATION FROM STANDARD

No deviation.

7.4 TEST SETUP

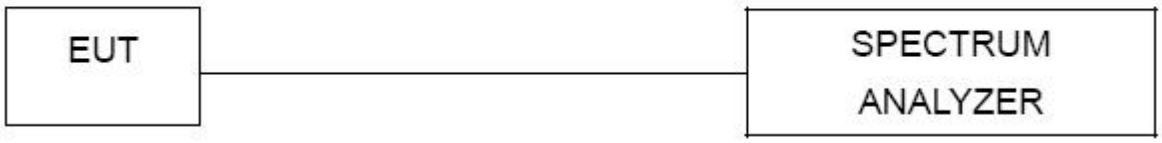

7.5 EUT OPERATION CONDITIONS

The EUT tested system was configured as the statements of 2.4 Unless otherwise a special operating condition is specified in the follows during the testing.

7.6 TEST RESULTS

Temperature :	25.1℃	Relative Humidity:	54%
Pressure :	1012 hPa	Test Voltage :	DC 12V
Test Mode :	TX		
5.2G (5180-5240MHz) :	Please refer to the Appendix A.2 for 5G WIFI RF Test Data.		
5.8G(5745-5825 MHz):	Please refer to the Appendix B.2 for 5G WIFI RF Test Data.		

8.OUT OF BAND EMISSIONS

8.1 APPLICABLE STANDARD

According to FCC §15.407(b)

Undesirable emission limits. Except as shown in paragraph (b)(7) of this section, the maximum emissions outside of the frequency bands of operation shall be attenuated in accordance with the following limits:

(1) For transmitters operating in the 5.15-5.25 GHz band: All emissions outside of the 5.15-5.35 GHz band shall not exceed an e.i.r.p. of −27 dBm/MHz.

(2) For transmitters operating in the 5.725-5.85 GHz band: All emissions shall be limited to a level of −27 dBm/MHz at 75 MHz or more above or below the band edge increasing linearly to 10 dBm/MHz at 25 MHz above or below the band edge, and from 25 MHz above or below the band edge increasing linearly to a level of 15.6 dBm/MHz at 5 MHz above or below the band edge, and from 5 MHz above or below the band edge increasing linearly to a level of 27 dBm/MHz at the band edge.

8.2 TEST PROCEDURE

1. Check the calibration of the measuring instrument using either an internal calibrator or a known signal froman FPC generator.
2. Position the EUT without connection to measurement instrument. Turn on the EUT and connect its antennaterminal to measurement instrument via a low loss cable. Then set it to any one measured frequency withinits operating range, and make sure the instrument is operated in its linear range.
3. Set RBW of spectrum analyzer to 1 MHz with a convenient frequency span.
4. Measure the highest amplitude appearing on spectral display and set it as a reference level. Plot the graphwith marking the highest point and edge frequency.
5. Repeat above procedures until all measured frequencies were complete.

8.3 DEVIATION FROM STANDARD

No deviation.

8.4 TEST SETUP

8.5 EUT OPERATION CONDITIONS

The EUT tested system was configured as the statements of 2.4 Unless otherwise a special operating condition is specified in the follows during the testing.

8.6 TEST RESULTS

Temperature：	25.1℃	Relative Humidity:	54%
Pressure：	1012 hPa	Test Voltage ：	DC 12V
Test Mode ：	TX		
5.2G (5180-5240MHz):	Please refer to the Appendix A.6 for 5G WIFI RF Test Data.		
5.8G(5745-5825 MHz):	Please refer to the Appendix B.6 for 5G WIFI RF Test Data.		

9.SPURIOUS RF CONDUCTED EMISSIONS

9.1 CONFORMANCE LIMIT

1. Below -20dB of the highest emission level in operating band.
2. Fall in the restricted bands listed in section 15.205. The maximum permitted average field strength is listedin section 15.209.

9.2 MEASURING INSTRUMENTS

The Measuring equipment is listed in the section 6.3 of this test report.

9.3 TEST SETUP

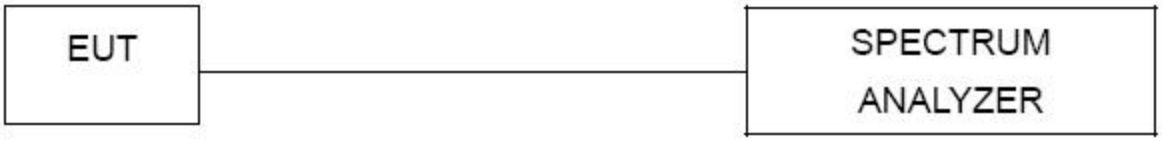

9.4 TEST PROCEDURE

The Spurious RF conducted emissions compliance of RF radiated emission should be measured by following the guidance in ANSI C63.10-2013 with respect to maximizing the emission by rotating the EUT, measuring the emission while the EUT is situated in three orthogonal planes (if appropriate), adjusting the measurement antenna height and polarization etc. Set RBW=100kHz and VBW= 300KHz to measure the peak field strength, and measure frequency range from 30MHz to 26.5GHz.

9.5 TEST RESULTS

Temperature :	25.1℃	Relative Humidity:	54%
Pressure :	1012 hPa	Test Voltage :	DC 12V
Test Mode :	TX		
5.2G (5180-5240MHz):	Please refer to the Appendix A.8 for 5G WIFI RF Test Data.		
5.8G(5745-5825 MHz):	Please refer to the Appendix B.8 for 5G WIFI RF Test Data.		

10.FREQUENCY STABILITY MEASUREMENT

10.1 LIMIT

Manufactures of U-NII devices are responsible for ensuring frequency stability such that an emission is maintained within the band of operation under all conditions of normal operation as specified in the user's manual.

The transmitter center frequency tolerance shall be ± 20 ppm maximum for the 5 GHz band (IEEE 802.11n specification).

10.2 TEST PROCEDURES

1. The transmitter output (antenna port) was connected to the spectrum analyzer.
2. EUT have transmitted absence of modulation signal and fixed channelize.
3. Set the spectrum analyzer span to view the entire absence of modulation emissions bandwidth.
4. Set RBW = 10 kHz, VBW = 30 kHz with peak detector and maxhold settings.
5. The test extreme voltage is to change the primary supply voltage from 85 to 115 percent of the nominal value
6. Extreme temperature is -30°C~50°C.

10.3 TEST SETUP LAYOUT

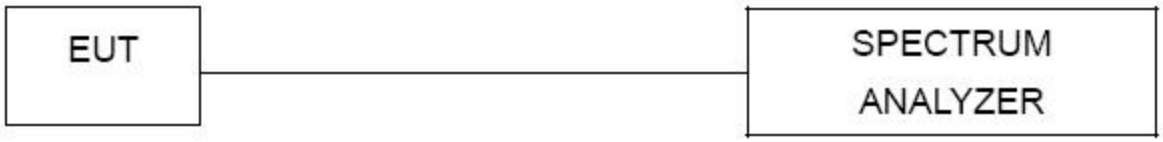

10.4 EUT OPERATION DURING TEST

The EUT was programmed to be in continuously un-modulation transmitting mode.

10.5 TEST RESULTS

Temperature :	25.1℃	Relative Humidity:	54%
Pressure :	1012 hPa	Test Voltage :	DC 12V
Test Mode :	TX		
5.2G (5180-5240MHz):	Please refer to the Appendix A.7 for 5G WIFI RF Test Data.		
5.8G(5745-5825 MHz):	Please refer to the Appendix B.7 for 5G WIFI RF Test Data.		

11.ANTENNA REQUIREMENT

Standard requirement:	FCC Part15 C Section 15.203
15.203 requirement: An intentional radiator shall be designed to ensure that no antenna other than that furnished by the responsible party shall be used with the device. The use of a permanently attached antenna or of an antenna that uses a unique coupling to the intentional radiator, the manufacturer may design the unit so that a broken antenna can be replaced by the user, but the use of a standard antenna jack or electrical connector is prohibited.	
EUT Antenna:	
The antenna is FPC Antenna, the best case gain of the antenna is 4.75 dBi, reference to the appendix II for details	

12. TEST SETUP PHOTO

Reference to the appendix I for details.

13. EUT CONSTRUCTIONAL DETAILS

Reference to the appendix II for details.