TEST REPORT

Product Name : SIRONA.TV
Model Number : Infusion 2023.1
FCC ID : 2BB9D-HIT3399

Prepared for : Safety Labs Inc
Address : 20 Kentsdale Drive Nepean Canada

Prepared by : EMTEK (SHENZHEN) CO., LTD.
Address : Building 69, Majialong Industry Zone, Nanshan District, Shenzhen, Guangdong, China

Tel: (0755) 26954280
Fax: (0755) 26954282

Report Number : ENS2207140200W00202R
Date(s) of Tests : February 24, 2023 to May 14, 2023
Date of issue : May 17, 2023

Table of Contents

1 TEST RESULT CERTIFICATION 3

2 EUT TECHNICAL DESCRIPTION 4

3 SUMMARY OF TEST RESULT 5

4 TEST METHODOLOGY 6

4.1 GENERAL DESCRIPTION OF APPLIED STANDARDS 6
4.2 MEASUREMENT EQUIPMENT USED 6
4.3 DESCRIPTION OF TEST MODES 7

5 FACILITIES AND ACCREDITATIONS 8

5.1 FACILITIES 8
5.2 LABORATORY ACCREDITATIONS AND LISTINGS 8

6 TEST SYSTEM UNCERTAINTY 9

7 SETUP OF EQUIPMENT UNDER TEST 10

7.1 RADIO FREQUENCY TEST SETUP 1 10
7.2 RADIO FREQUENCY TEST SETUP 2 10
7.3 CONDUCTED EMISSION TEST SETUP 11
7.4 BLOCK DIAGRAM CONFIGURATION OF TEST SYSTEM 12
7.5 SUPPORT EQUIPMENT 12

8 TEST REQUIREMENTS 13

8.1 DTS 6DB BANDWIDTH 13
8.2 MAXIMUM PEAK CONDUCTED OUTPUT POWER 16
8.3 MAXIMUM POWER SPECTRAL DENSITY 19
8.4 UNWANTED EMISSIONS IN NON-RESTRICTED FREQUENCY BANDS 22
8.5 RADIATED SPURIOUS EMISSION 32
8.6 CONDUCTED EMISSIONS TEST 44
8.7 ANTENNA APPLICATION 47

1 TEST RESULT CERTIFICATION

Applicant	:	Safety Labs Inc
Address :		20 Kentsdale Drive Nepean Canada
Manufacturer	:	Safety Labs Inc
Address :		20 Kentsdale Drive Nepean Canada
EUT	:	SIRONA.TV
Model Name	:	Infusion 2023.1
Trademark	:	N/A

Measurement Procedure Used:

APPLICABLE STANDARDS	
STANDARD	**TEST RESULT**
FCC 47 CFR Part 2 , Subpart J FCC 47 CFR Part 15, Subpart C	**PASS**

The above equipment was tested by EMTEK(SHENZHEN) CO., LTD. The test data, data evaluation, test procedures, and equipment configurations shown in this report were made in accordance with the procedures given in ANSI C63.10 (2013) and the energy emitted by the sample EUT tested as described in this report is in compliance with the requirements of FCC Rules Part 2 and Part 15.247

The test results of this report relate only to the tested sample identified in this report

Date of Test : February 24, 2023 to May 14, 2023

Prepared by : Una Yu /Editor

Reviewer : Joe Xia/Supervisor

Approve & Authorized Signer : Lisa Wang/Manager

EMTEK (SHENZHEN) CO., LTD. TESTING

2 EUT TECHNICAL DESCRIPTION

Product:	SIRONA.TV
Model Number:	Infusion 2023.1
Sample:	2#
Device Type:	Bluetooth with BLE mode
Data Rate:	1Mbps for GFSK modulation
Modulation:	Bluetooth DTS: GFSK
Operating Frequency Range:	2402-2480MHz
Number of Channels:	40 Channels for Bluetooth DTS;
Transmit Power Max:	1.74 dBm
Antenna Type:	PCB Antenna
Antenna Gain:	-0.66 dBi
Power Supply:	DC 5V from adapter
Adapter:	MODEL:GPDQ3-0502000E INPUT: AC100-240V~50Hz/60Hz,0.3AMax OUTPUT: DC5V,2.0A
Test Voltage:	AC 120V/60Hz
Date of Received:	February 23, 2023
Temperature Range:	0°C ~ +70°C

Note: for more details, please refer to the User's manual of the EUT.

3 SUMMARY OF TEST RESULT

FCC Part Clause	Test Parameter	Verdict	Remark
15.247(a)(2)	DTS (6dB) Bandwidth	PASS	
15.247(b)(3)	Maximum Peak Conducted Output Power	PASS	
15.247(e)	Maximum Power Spectral Density Level	PASS	
15.247(d)	Unwanted Emission Into Non-Restricted Frequency Bands	PASS	
15.247(d) 15.209	Unwanted Emission Into Restricted Frequency Bands (conducted)	PASS	
15.247(d) 15.209	Radiated Spurious Emission	PASS	
15.207	Conducted Emission Test	PASS	
15.247(b)	Antenna Application	PASS	
	NOTE1: N/A (Not Applicable) NOTE2: According to FCC OET KDB 558074, the report use radiated measurements in the restricted frequency bands. In addition, the radiated test is also performed to ensure the emissions emanating from the device cabinet also comply with the applicable limits.		

RELATED SUBMITTAL(S) / GRANT(S):

This submittal(s) (test report) is intended for **FCC ID: 2BB9D-HIT3399** filing to comply with Section 15.247 of the FCC Part 15, Subpart C Rules.

4 TEST METHODOLOGY

4.1 GENERAL DESCRIPTION OF APPLIED STANDARDS

According to its specifications, the EUT must comply with the requirements of the following standards:
FCC 47 CFR Part 2, Subpart J
FCC 47 CFR Part 15, Subpart C
FCC KDB 558074 D01 15.247 Meas Guidance v05r02

4.2 MEASUREMENT EQUIPMENT USED

Conducted Emission Test Equipment

Equipment	Manufacturer	Model No.	Serial No.	Last Cal.	Cal. Interval
EMI Test Receiver	Rohde & Schwarz	ESCI	101384	2022/5/14	1Year
AMN	Rohde & Schwarz	ENV216	101161	2022/5/14	1Year
AMN	Kyoritsu	KNW-407	8-1492-9	2022/5/15	1Year

For Spurious Emissions Test

Equipment	Manufacturer	Model No.	Serial No.	Last Cal.	Cal. Interval
Pre-Amplifier	Bonn	BLMA 011001N	2213967A	2022/10/31	1Year
EMI Test Receiver	Rohde & Schwarz	ESR7	102551	2022/10/31	1Year
Bilog Antenna	Schwarzbeck	VULB9163	9163142	2022/7/24	2Year
Horn antenna	Schwarzbeck	BBHA9120D	9120D-1198	2021/6/15	2Year
Pre-Amplifier	Bonn	BLMA 0118-5G	2213967B-01	2022/10/31	1Year
Spectrum Analyzer	Rohde & Schwarz	FSV3044	101290	2022/10/31	1Year
Horn antenna	Schwarzbeck	BBHA9170	9170-399	2021/6/12	2Year
Pre-Amplifier	Lunar EM	LNA18G26-40	J1012131010001	2022/5/14	1Year
Pre-Amplifier	Lunar EM	LNA26G40-40	J1013131028001	2022/5/14	1Year
Loop Antenna	Schwarzbeck	FMZB1519	1519-012	2021/6/12	2Year
Band reject Filter(50dB)	WI/DE	WRCGV-2400(2400-2485MHz)	2	2022/5/15	1 Year

For other test items:

Equipment	Manufacturer	Model No.	Serial No.	Last Cal.	Cal. Interval
Signal Analyzer	Agilent	N9010A	MY53470879	2022/5/14	1Year
Vector Signal Generater	Agilent	N5182B	MY53050878	2022/5/14	1Year
Analog Signal Generator	Agilent	N5171B	MY53050553	2022/5/14	1Year
Power Meter	Agilent	PS-X10-100	\	2022/5/15	1Year
Blocking Box	THEDA	AD211	TW5451140	2022/5/14	1Year
Switchgroup	THEDA	ETF-025(VASC6)	TW5451008	N/A	N/A
MIMO Matrix Switch	THEDA	4P5TM18	TW5451009	N/A	N/A

Temperature&Humidity Chamber	ESPEC	EL-02KA	12107166	2022/7/3	1 Year

4.3 DESCRIPTION OF TEST MODES

The EUT has been tested under its typical operating condition.
The EUT configuration for testing is installed on RF field strength measurement to meet the Commissions requirement and operating in a manner which intends to maximize its emission characteristics in a continuous normal application.

The Transmitter was operated in the normal operating mode. The TX frequency was fixed which was for the purpose of the measurements.

Test of channel included the lowest and middle and highest frequency to perform the test, then record on this report.

Those data rates (Bluetooth 5.0 DTS :1Mbps and 2Mbps) were used for all test.

Pre-defined engineering program for regulatory testing used to control the EUT for staying in continuous transmitting and receiving mode is programmed.

Frequency and Channel list for Bluetooth 5.0 DTS:

Channel	Frequency (MHz)	Channel	Frequency (MHz)	Channel	Frequency (MHz)
0	2402	19	2440	…	…
1	2404	20	2442	37	2476
2	2406	21	2444	38	2478
…	…	…	…	39	2480
Note: fc=2402MHz+k×1MHz k=1 to 39					

Test Frequency and channel for Bluetooth 5.0 DTS:

Lowest Frequency		Middle Frequency		Highest Frequency	
Channel	Frequency (MHz)	Channel	Frequency (MHz)	Channel	Frequency (MHz)
0	2402	19	2440	39	2480

5 FACILITIES AND ACCREDITATIONS

5.1 FACILITIES

All measurement facilities used to collect the measurement data are located at

Bldg 69, Majialong Industry Zone District, Nanshan District, Shenzhen, China
The sites are constructed in conformance with the requirements of ANSI C63.7, ANSI C63.10 and CISPR Publication 22.

5.2 LABORATORY ACCREDITATIONS AND LISTINGS

Site Description

EMC Lab. : **Accredited by CNAS**
The Certificate Registration Number is L2291.
The Laboratory has been assessed and proved to be in compliance with CNAS-CL01 (identical to ISO/IEC 17025:2017)

Accredited by FCC
Designation Number: CN1204
Test Firm Registration Number: 882943

Accredited by A2LA
The Certificate Number is 4321.01.

Accredited by Industry Canada
The Conformity Assessment Body Identifier is CN0008

Name of Firm : EMTEK (SHENZHEN) CO., LTD.
Site Location : Building 69, Majialong Industry Zone, Nanshan District, Shenzhen, Guangdong, China

6 TEST SYSTEM UNCERTAINTY

The following measurement uncertainty levels have been estimated for tests performed on the apparatus:

Test Parameter	Measurement Uncertainty
RF Output Power	±1.0%
Power Spectral Density	±0.9%
Duty Cycle and Tx-Sequence and Tx-Gap	±1.3%
Medium Utilisation Factor	±1.5%
Occupied Channel Bandwidth	±2.3%
Transmitter Unwanted Emission in the Out-of Band	±1.2%
Transmitter Unwanted Emissions in the Spurious Domain	±2.7%
Receiver Spurious Emissions	±2.7%
Temperature	±3.2%
Humidity	±2.5%

Measurement Uncertainty for a level of Confidence of 95%

7 SETUP OF EQUIPMENT UNDER TEST

7.1 RADIO FREQUENCY TEST SETUP 1

The Bluetooth 5.0 DTS component's antenna ports(s) of the EUT are connected to the measurement instrument per an appropriate attenuator. The EUT is controlled by PC/software to emit the specified signals for the purpose of measurements.

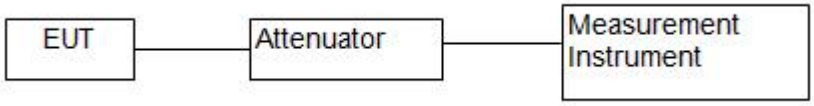

7.2 RADIO FREQUENCY TEST SETUP 2

The test site semi-anechoic chamber has met the requirement of NSA tolerance 4 dB according to the standards: ANSI C63.10. The test distance is 3m.The setup is according to the requirements in Section 13.1.4.1 of ANSI C63.10-2013 and CAN/CSA-CEI/IEC CISPR 22.

Below 30MHz：

The EUT is placed on a turntable 0.8 meters above the ground in the chamber, 3 meter away from the antenna (loop antenna). The Antenna should be positioned with its plane vertical at the specified distance from the EUT and rotated about its vertical axis for maximum response at each azimuth about the EUT. The center of the loop shall be 1 m above the ground. For certain applications, the loop antenna plane may also need to be positioned horizontally at the specified distance from the EUT.

30MHz-1GHz：

The EUT is placed on a turntable 0.8 meters above the ground in the chamber, 3 meter away from the antenna. The maximal emission value is acquired by adjusting the antenna height, polarisation and turntable azimuth. Normally, the height range of antenna is 1 m to 4 m, the azimuth range of turntable is 0° to 360°, and the receive antenna has two polarizations Vertical (V) and Horizontal (H).

Above 1GHz：

The EUT is placed on a turntable 1.5 meters above the ground in the chamber, 3 meter away from the antenna. The maximal emission value is acquired by adjusting the antenna height, polarisation and turntable azimuth. Normally, the height range of antenna is 1 m to 4 m, the azimuth range of turntable is 0° to 360°, and the receive antenna has two polarizations Vertical (V) and Horizontal (H).

(a) Radiated Emission Test Set-Up, Frequency Below 30MHz

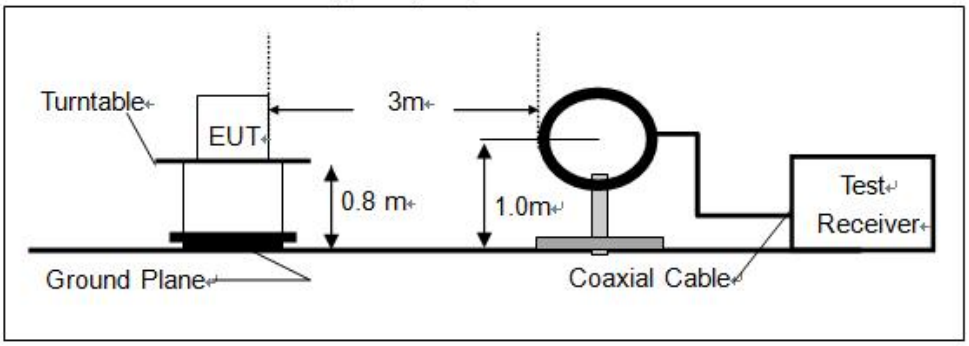

(b) Radiated Emission Test Set-Up, Frequency Below 1000MHz

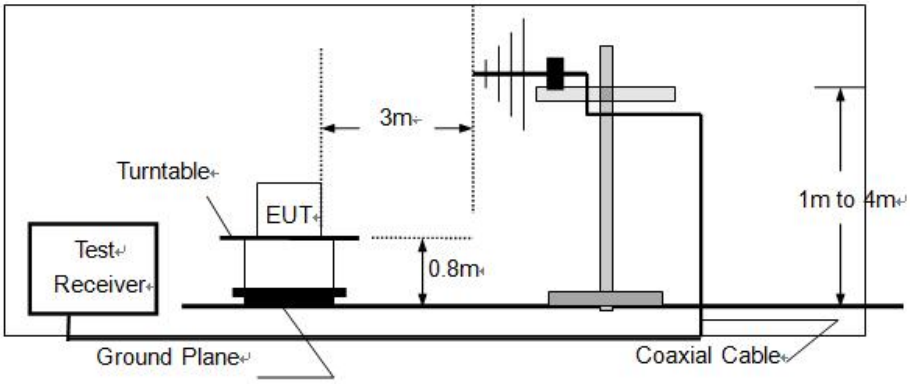

(c) Radiated Emission Test Set-Up, Frequency above 1000MHz

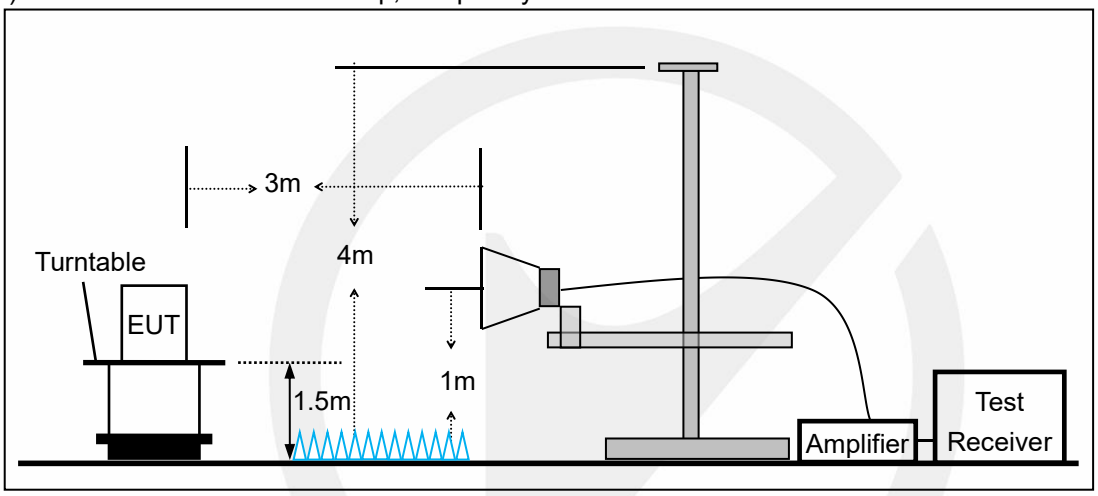

7.3 CONDUCTED EMISSION TEST SETUP

The mains cable of the EUT (maybe per AC/DC Adapter) must be connected to LISN. The LISN shall be placed 0.8 m from the boundary of EUT and bonded to a ground reference plane for LISN mounted on top of the ground reference plane. This distance is between the closest points of the LISN and the EUT. All other units of the EUT and associated equipment shall be at least 0.8m from the LISN. Ground connections, where required for safety purposes, shall be connected to the reference ground point of the LISN and, where not otherwise provided or specified by the manufacturer, shall be of same length as the mains cable and run parallel to the mains connection at a separation distance of not more than 0.1 m.

According to the requirements in Section 13.1.4.1 of ANSI C63.10-2013 Conducted emissions from the EUT measured in the frequency range between 0.15 MHz and 30 MHz using CISPR Quasi-Peak and average detector mode.

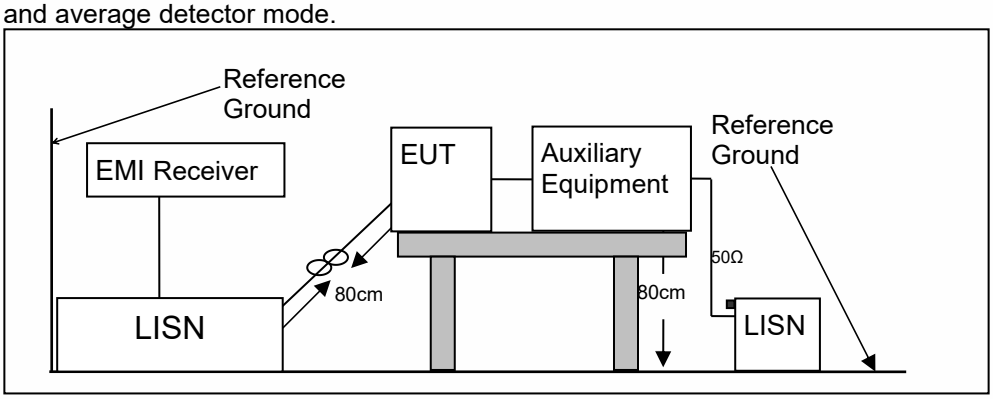

7.4 BLOCK DIAGRAM CONFIGURATION OF TEST SYSTEM

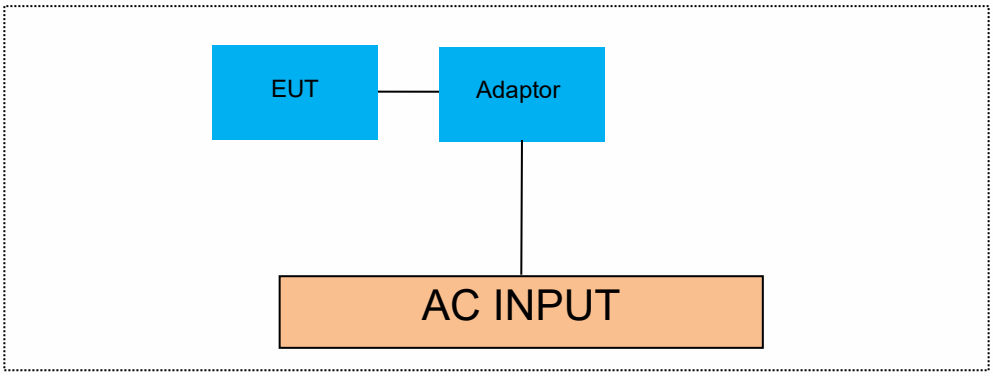

7.5 SUPPORT EQUIPMENT

EUT Cable List and Details			
Cable Description	Length (m)	Shielded/Unshielded	With / Without Ferrite
/	/	/	/

Auxiliary Cable List and Details			
Cable Description	Length (m)	Shielded/Unshielded	With / Without Ferrite
/	/	/	/

Auxiliary Equipment List and Details			
Description	Manufacturer	Model	Serial Number
Notebook	Lenovo	ThinkPad S2 Yoga 3rd Gen	R9-OR98VZ

Notes:

1. *All the equipment/cables were placed in the worst-case configuration to maximize the emission during the test.*
2. *Grounding was established in accordance with the manufacturer's requirements and conditions for the intended use.*

8 TEST REQUIREMENTS

8.1 DTS 6DB BANDWIDTH

8.1.1 Applicable Standard

According to FCC Part 15.247(a)(2) and KDB 558074 D01 15.247 Meas Guidance v05r02

8.1.2 Conformance Limit

The minimum -6 dB bandwidth shall be at least 500 kHz.

8.1.3 Test Configuration

Test according to clause 7.1 radio frequency test setup 1

8.1.4 Test Procedure

The EUT was operating in Bluetooth 5.0 DTS mode and controlled its channel. Printed out the test result from the spectrum by hard copy function.
The RF output of EUT was connected to the spectrum analyzer by RF cable and attenuator. The path loss was compensated to the results for each measurement.
Set to the maximum power setting and enable the EUT transmit continuously
Set RBW = 100 kHz.
Set the video bandwidth (VBW) =300 kHz.
Set Span=2 times OBW
Set Detector = Peak.
Set Trace mode = max hold.
Set Sweep = auto couple.
Allow the trace to stabilize.
Measure the maximum width of the emission that is constrained by the frequencies associated with the two outermost amplitude points (upper and lower frequencies) that are attenuated by 6 dB relative to the maximum level measured in the fundamental emission.
Measure and record the results in the test report.

Test Results

Temperature:	25° C
Relative Humidity:	45%
ATM Pressure:	1011 mbar

TestMode	Antenna	Freq(MHz)	DTS BW [MHz]	FL[MHz]	FH[MHz]	Limit[MHz]	Verdict
BLE_1M	Ant1	2402	0.70	2401.63	2402.33	0.5	PASS
		2440	0.70	2439.63	2440.34	0.5	PASS
		2480	0.70	2479.64	2480.34	0.5	PASS
BLE_2M	Ant1	2402	1.12	2401.43	2402.55	0.5	PASS
		2440	1.11	2439.44	2440.55	0.5	PASS
		2480	1.11	2479.44	2480.56	0.5	PASS

BLE_1M_Ant1_2402

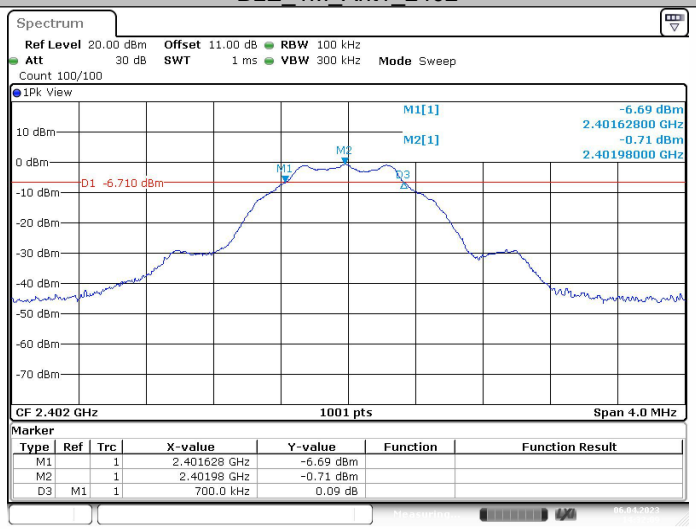

Date: 6.APR.2023 14:32:09

BLE_1M_Ant1_2440

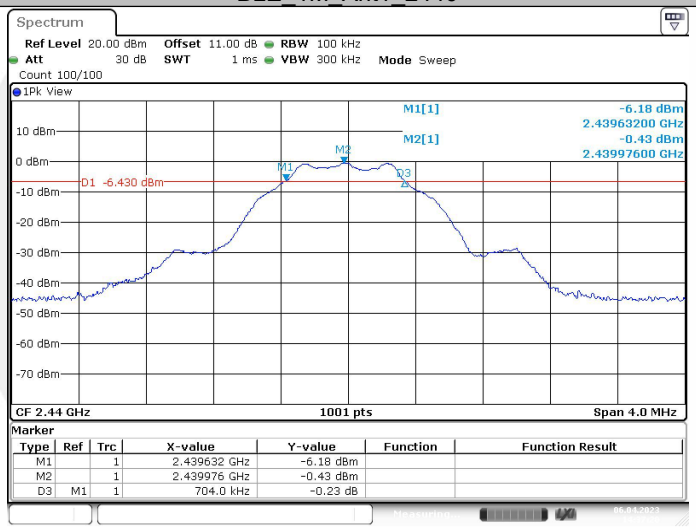

Date: 6.APR.2023 14:37:20

BLE_1M_Ant1_2480

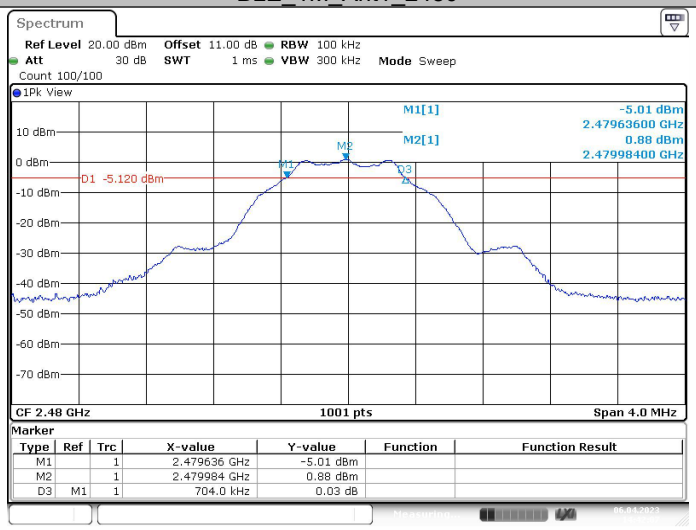

Date: 6.APR.2023 14:42:07

BLE_2M_Ant1_2402

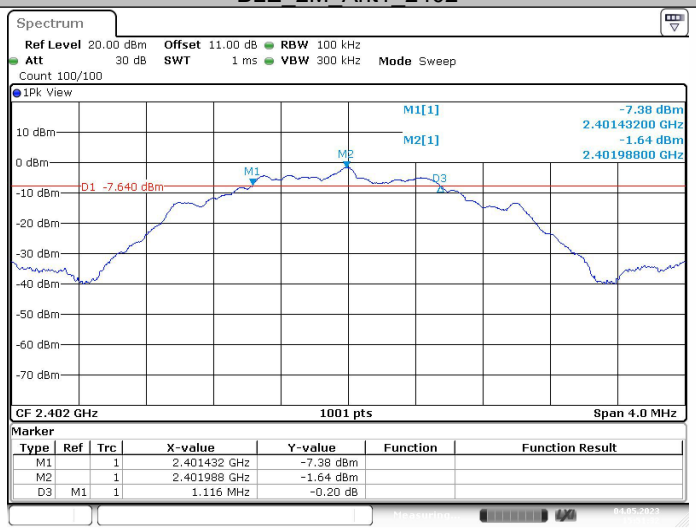

Date: 4.MAY.2023 15:51:33

BLE_2M_Ant1_2440

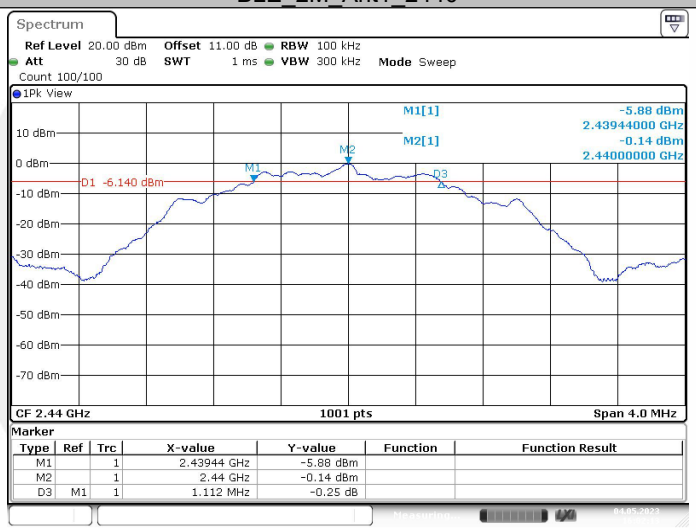

Date: 4.MAY.2023 16:02:14

BLE_2M_Ant1_2480

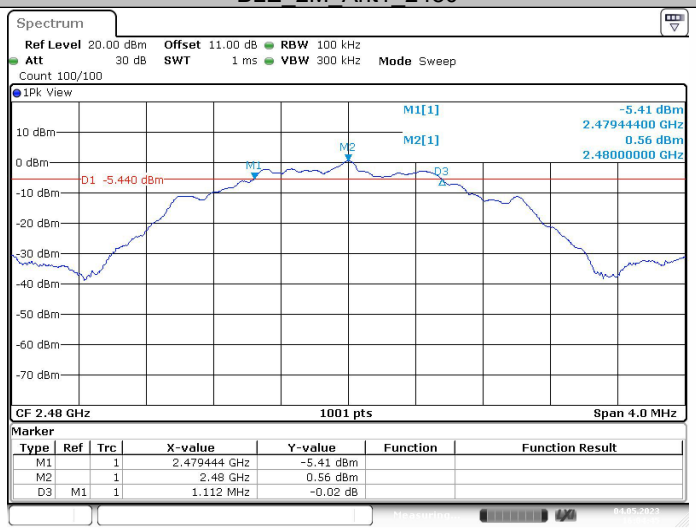

Date: 4.MAY.2023 16:04:46

8.2 MAXIMUM PEAK CONDUCTED OUTPUT POWER

8.2.1 Applicable Standard

According to FCC Part 15.247(b)(3) and KDB 558074 D01 15.247 Meas Guidance v05r02

8.2.2 Conformance Limit

The maximum peak conducted output power of the intentional radiator for systems using digital modulation in the 2400 - 2483.5 MHz bands shall not exceed: 1 Watt (30dBm).

8.2.3 Test Configuration

Test according to clause 7.1 radio frequency test setup 1

8.2.4 Test Procedure

■ According to FCC Part15.247(b)(3)
As an alternative to a peak power measurement, compliance with the one Watt limit can be based on a measurement of the maximum conducted output power. For smart system, Maximum Conducted Output Power is defined as the total transmit power delivered to all antennas and antenna elements averaged across all symbols in the signaling alphabet when the transmitter is operating at its maximum power control level. Power must be summed across all antennas and antenna elements. If multiple modes of operation are possible (e.g., alternative modulation methods), the maximum conducted output power is the highest total transmit power occurring in any mode.
Set the RBW ≧DTS bandwidth(about 1MHz).
Set VBW =3*RBW(about 3MHz)
Set the span ≧3*RBW
Set Sweep time = auto couple.
Set Detector = peak.
Set Trace mode = max hold.
Allow trace to fully stabilize. Use peak marker function to determine the peak amplitude level.
■ According to FCC Part 15.247(b)(4):
Conducted output power limit specified in paragraph (b) of this section is based on the use of antennas with directional gains that do not exceed 6 dBi. If transmitting antennas of directional gain greater than 6 dBi are used, the conducted output power from the intentional radiator shall be reduced below the stated values in paragraphs (b)(3) of this section, as appropriate, by the amount in dB that the directional gain of the antenna exceeds 6 dBi.

Test Results

Temperature:	25° C
Relative Humidity:	45%
ATM Pressure:	1011 mbar

TestMode	Antenna	Freq(MHz)	Conducted Peak Powert[dBm]	Conducted Limit[dBm]	Verdict
BLE_1M	Ant1	2402	0.3	≤30	PASS
		2440	0.45	≤30	PASS
		2480	1.74	≤30	PASS
BLE_2M	Ant1	2402	-0.33	≤30	PASS
		2440	0.99	≤30	PASS
		2480	1.66	≤30	PASS

BLE_1M_Ant1_2402

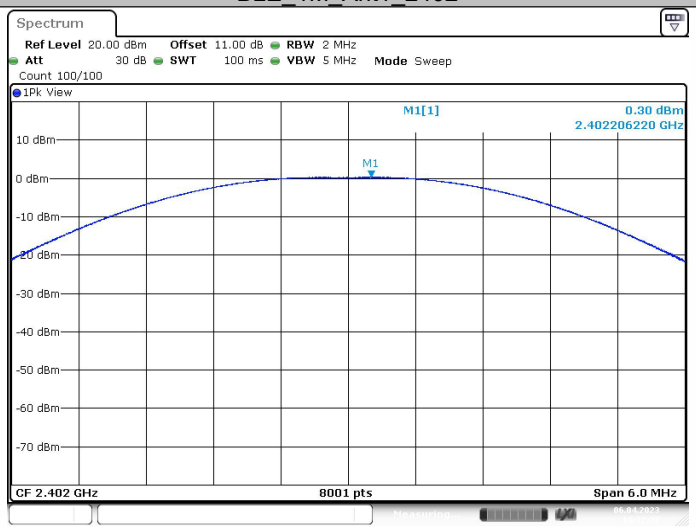

Date: 6.APR.2023 14:32:38

BLE_1M_Ant1_2440

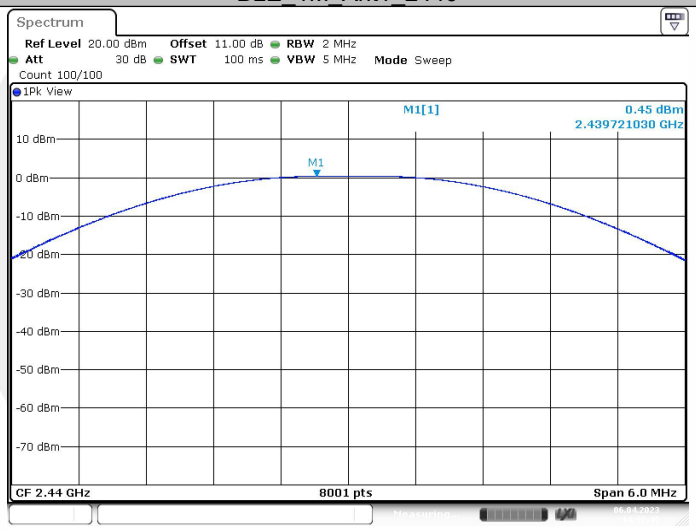

Date: 6.APR.2023 14:37:49

BLE_1M_Ant1_2480

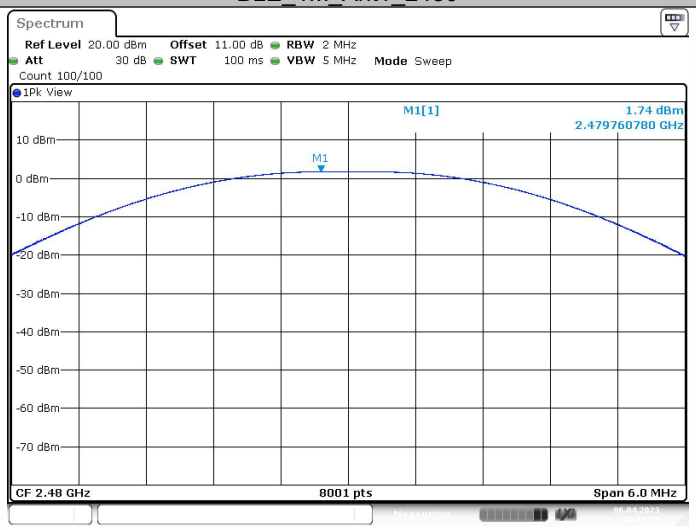

Date: 6.APR.2023 14:42:35

BLE_2M_Ant1_2402

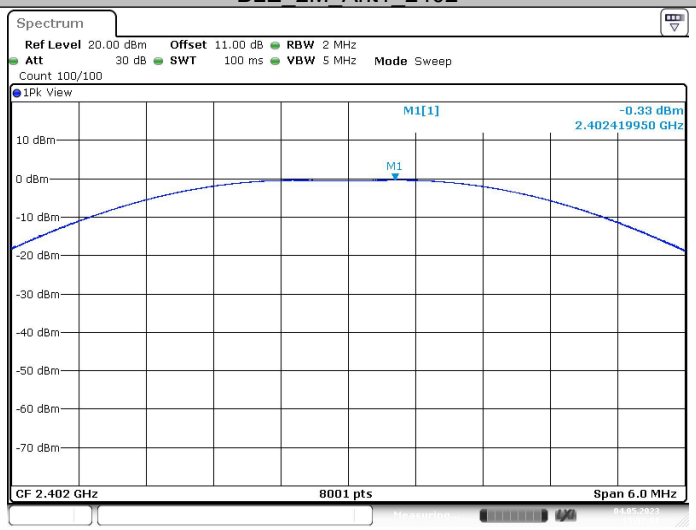

Date: 4.MAY.2023 15:52:01

BLE_2M_Ant1_2440

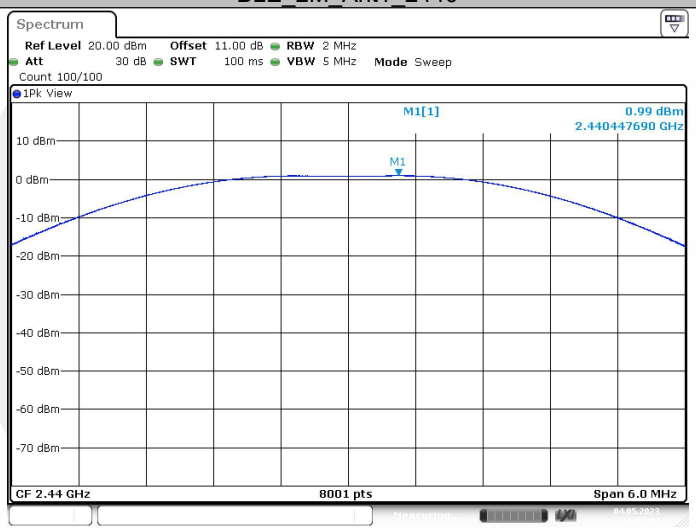

Date: 4.MAY.2023 16:02:42

BLE_2M_Ant1_2480

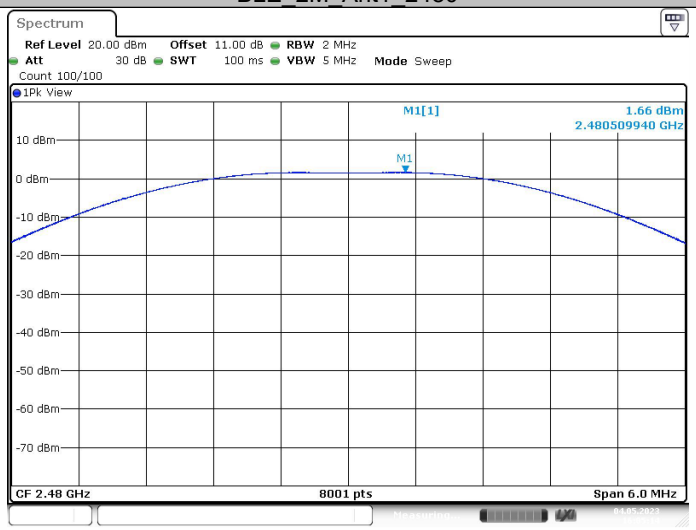

Date: 4.MAY.2023 16:05:14

8.3 MAXIMUM POWER SPECTRAL DENSITY

8.3.1 Applicable Standard

According to FCC Part 15.247(e) and KDB 558074 D01 15.247 Meas Guidance v05r02

8.3.2 Conformance Limit

The transmitter power spectral density conducted from the transmitter to the antenna shall not be greater than 8 dBm in any 3 kHz band during any time interval of continuous transmission.

8.3.3 Test Configuration

Test according to clause 7.1 radio frequency test setup 1

8.3.4 Test Procedure

This procedure shall be used if maximum peak conducted output power was used to demonstrate compliance
The transmitter output (antenna port) was connected to the spectrum analyzer
Set analyzer center frequency to DTS channel center frequency.
Set the span to 1.5 times the DTS bandwidth.
Set the RBW to: 3 kHz
Set the VBW to: 10 kHz.
Set Detector = peak.
Set Sweep time = auto couple.
Set Trace mode = max hold.
Allow trace to fully stabilize.
Use the peak marker function to determine the maximum amplitude level within the RBW.

8.3.5 Test Results

Temperature:	25° C
Relative Humidity:	45%
ATM Pressure:	1011 mbar

TestMode	Antenna	Freq(MHz)	Result[dBm/3kHz]	Limit[dBm/3kHz]	Verdict
BLE_1M	Ant1	2402	-13.87	≤8.00	PASS
		2440	-13.81	≤8.00	PASS
		2480	-12.41	≤8.00	PASS
BLE_2M	Ant1	2402	-17.78	≤8.00	PASS
		2440	-16.31	≤8.00	PASS
		2480	-15.63	≤8.00	PASS

BLE_1M_Ant1_2402

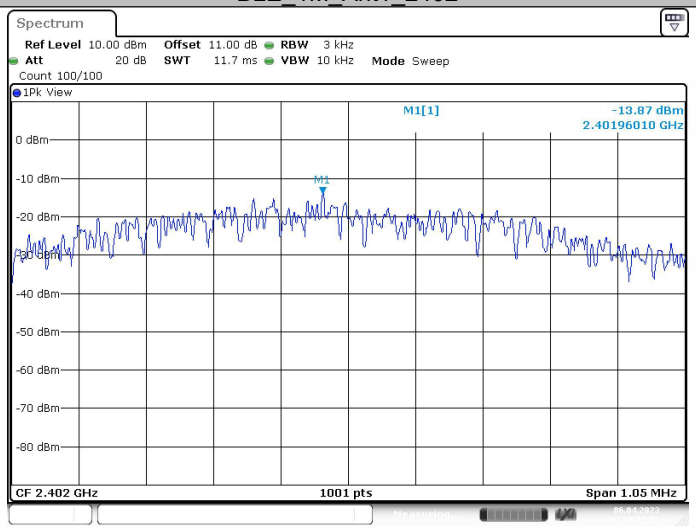

Date: 6.APR.2023 14:32:51

BLE_1M_Ant1_2440

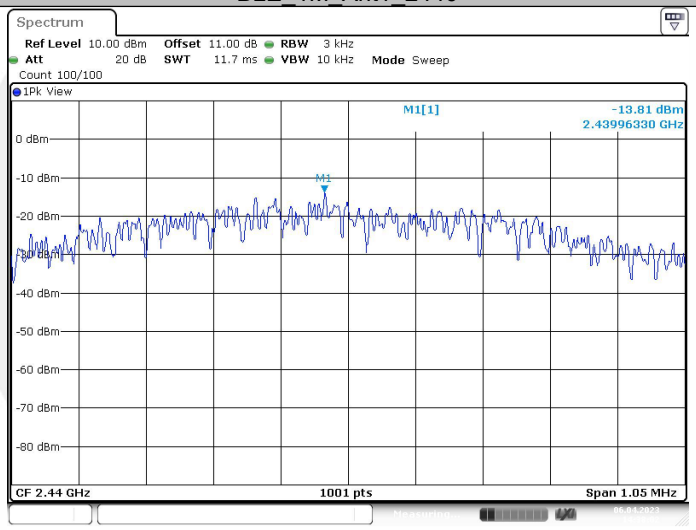

Date: 6.APR.2023 14:38:02

BLE_1M_Ant1_2480

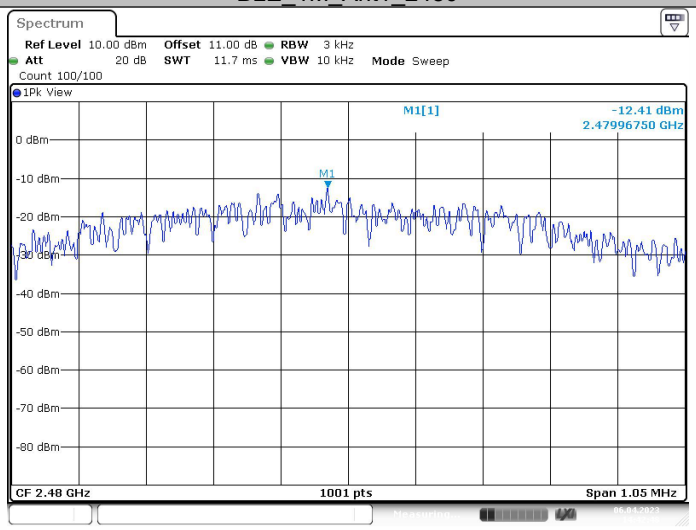

Date: 6.APR.2023 14:42:48

BLE_2M_Ant1_2402

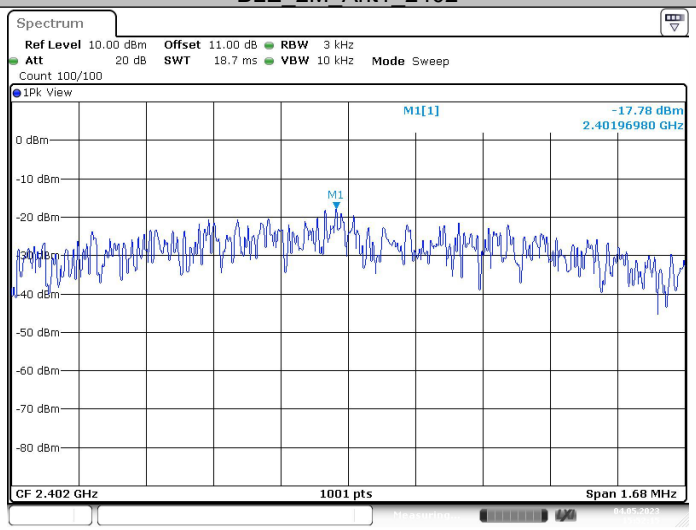

Date: 4.MAY.2023 15:52:15

BLE_2M_Ant1_2440

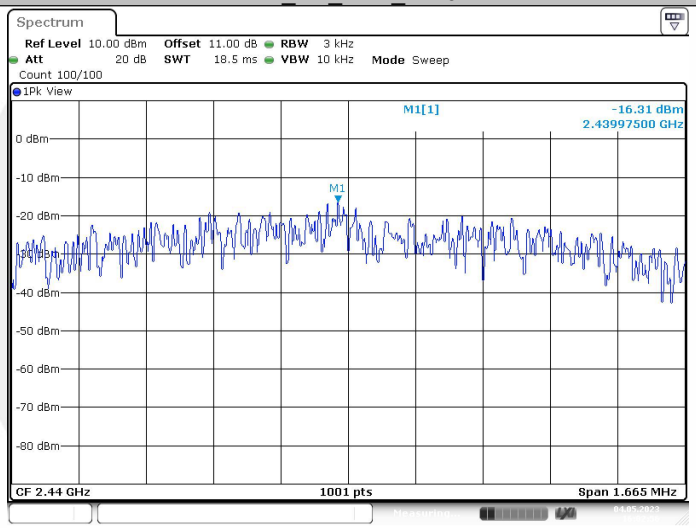

Date: 4.MAY.2023 16:02:56

BLE_2M_Ant1_2480

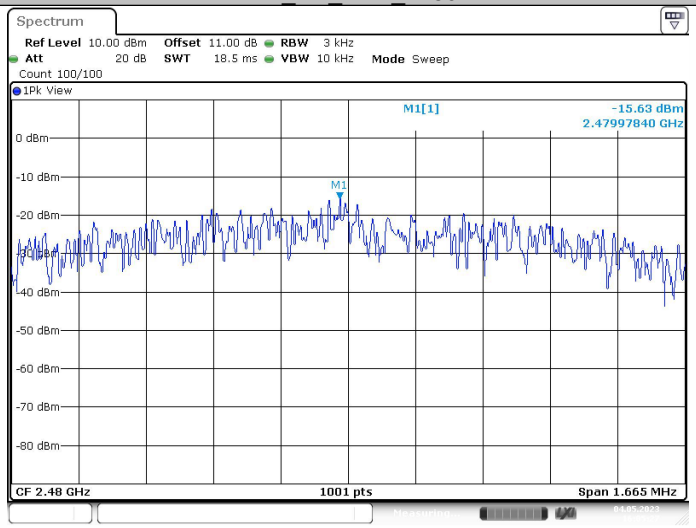

Date: 4.MAY.2023 16:05:27

8.4 UNWANTED EMISSIONS IN NON-RESTRICTED FREQUENCY BANDS

8.4.1 Applicable Standard

According to FCC Part 15.247(d) and KDB 558074 D01 15.247 Meas Guidance v05r02

8.4.2 Conformance Limit

According to FCC Part 15.247(d):
In any 100 kHz bandwidth outside the frequency band in which the spread spectrum or digitally modulated intentional radiator is operating, the radio frequency power that is produced by the intentional radiator shall be at least 20 dB below that in the 100 kHz bandwidth within the band that contains the highest level of the desired power, based on either an RF conducted or a radiated measurement, provided the transmitter demonstrates compliance with the peak conducted power limits. If the transmitter complies with the conducted power limits based on the use of RMS averaging over a time interval, as permitted under paragraph (b)(3) of this section, the attenuation required under this paragraph shall be 30 dB instead of 20 dB.

8.4.3 Test Configuration

Test according to clause 7.1 radio frequency test setup 1

8.4.4 Test Procedure

The transmitter output (antenna port) was connected to the spectrum analyzer

- **Reference level measurement**

Establish a reference level by using the following procedure:
Set instrument center frequency to DTS channel center frequency.
Set the span to = 1.5 times the DTS bandwidth.
Set the RBW = 100 kHz.
Set the VBW ≥ 3 x RBW.
Set Detector = peak.
Set Sweep time = auto couple.
Set Trace mode = max hold.
Allow trace to fully stabilize.
Use the peak marker function to determine the maximum PSD level.
Note that the channel found to contain the maximum PSD level can be used to establish the reference level.

- **Emission level measurement**

Set the center frequency and span to encompass frequency range to be measured.
Set the RBW = 100 kHz.
Set the VBW =300 kHz.
Set Detector = peak
Sweep time = auto couple.
Trace mode = max hold.
Allow trace to fully stabilize.
Use the peak marker function to determine the maximum amplitude level.
Ensure that the amplitude of all unwanted emissions outside of the authorized frequency band (excluding restricted frequency bands) are attenuated by at least the minimum requirements . Report the three highest emissions relative to the limit.

8.4.5 Test Results

Temperature:	25° C
Relative Humidity:	45%
ATM Pressure:	1011 mbar

All the modes were tested and the data of BLE 1M the worst modes are attached the following pages.

Reference level measurement

TestMode	Antenna	Freq(MHz)	Max.Point[MHz]	Result[dBm]
BLE_1M	Ant1	2402	2401.98	-0.35
		2440	2439.98	-0.45
		2480	2479.99	0.83
BLE_2M	Ant1	2402	2401.99	-1.43
		2440	2440.00	-0.10
		2480	2480.00	0.57

Band edge measurements

TestMode	Antenna	ChName	Freq(MHz)	RefLevel[dBm]	Result[dBm]	Limit[dBm]	Verdict
BLE_1M	Ant1	Low	2402	-0.35	-40.42	≤-20.35	PASS
		High	2480	0.83	-39.14	≤-19.17	PASS
BLE_2M	Ant1	Low	2402	-1.43	-31.83	≤-21.43	PASS
		High	2480	0.57	-36.23	≤-19.43	PASS

Conducted Spurious Emission

TestMode	Antenna	Freq(MHz)	FreqRange [MHz]	RefLevel [dBm]	Result[dBm]	Limit[dBm]	Verdict
BLE_1M	Ant1	2402	30~1000	-0.35	-49.86	≤-20.35	PASS
			1000~26500	-0.35	-45.57	≤-20.35	PASS
		2440	30~1000	-0.45	-49.43	≤-20.45	PASS
			1000~26500	-0.45	-44.18	≤-20.45	PASS
		2480	30~1000	0.83	-49.21	≤-19.17	PASS
			1000~26500	0.83	-44.88	≤-19.17	PASS
BLE_2M	Ant1	2402	30~1000	-1.43	-49.45	≤-21.43	PASS
			1000~26500	-1.43	-45.27	≤-21.43	PASS
		2440	30~1000	-0.10	-49.46	≤-20.1	PASS
			1000~26500	-0.10	-45.27	≤-20.1	PASS
		2480	30~1000	0.57	-49.46	≤-19.43	PASS
			1000~26500	0.57	-45.81	≤-19.43	PASS

Reference level measurement

BLE_1M_Ant1_2402

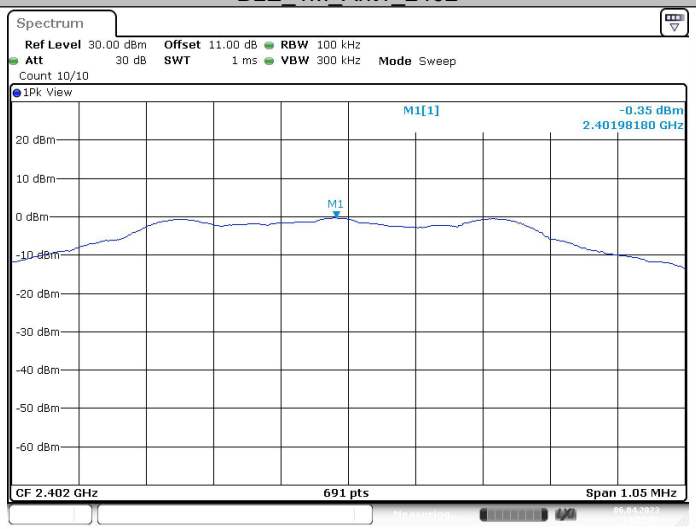

Date: 6.APR.2023 14:32:59

BLE_1M_Ant1_2440

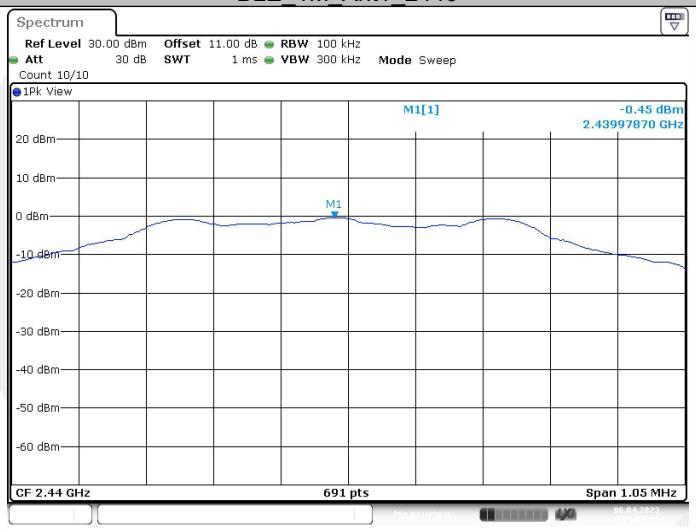

Date: 6.APR.2023 14:38:09

BLE_1M_Ant1_2480

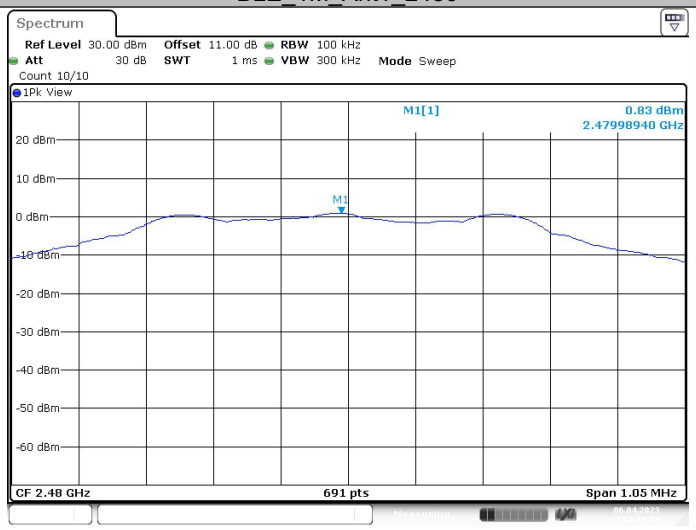

Date: 6.APR.2023 14:42:56

BLE_2M_Ant1_2402

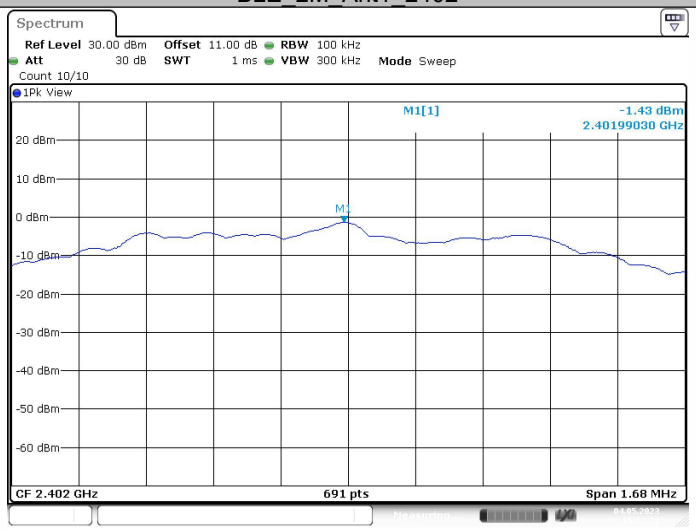

Date: 4.MAY.2023 15:52:23

BLE_2M_Ant1_2440

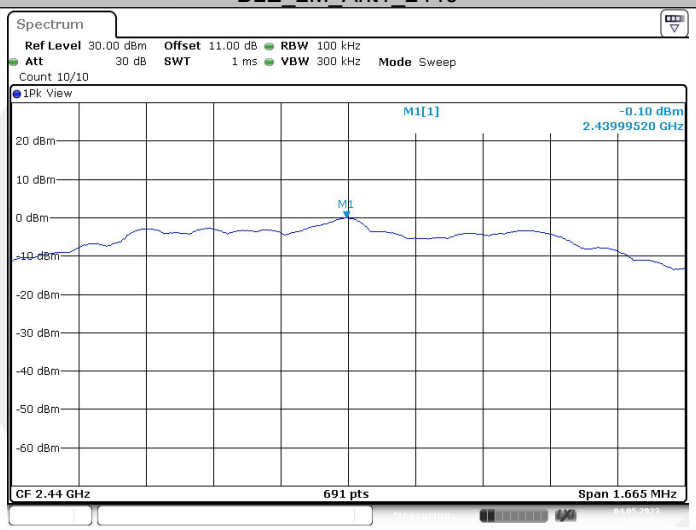

Date: 4.MAY.2023 16:03:03

BLE_2M_Ant1_2480

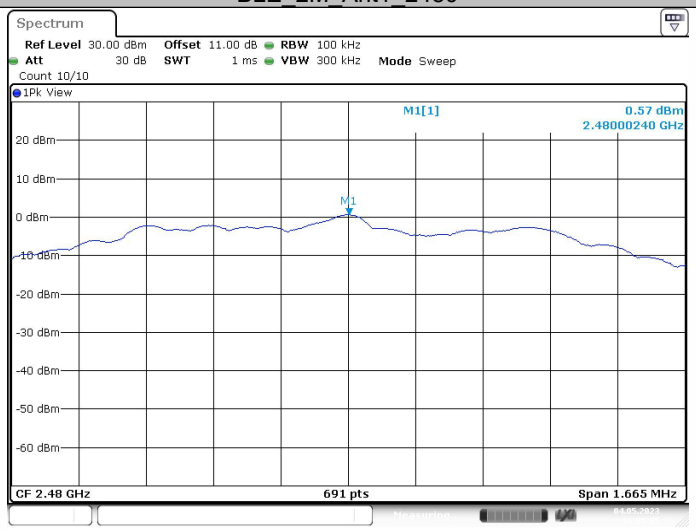

Date: 4.MAY.2023 16:05:35

Band edge measurements

BLE_1M_Ant1_Low_2402

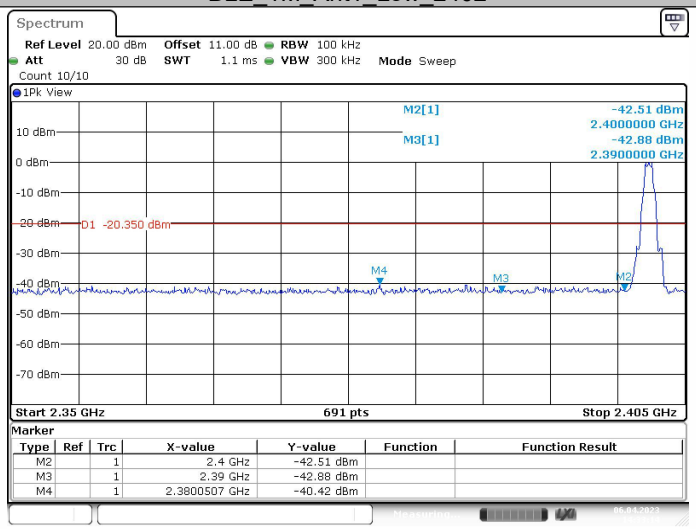

Date: 6.APR.2023 14:33:14

BLE_1M_Ant1_High_2480

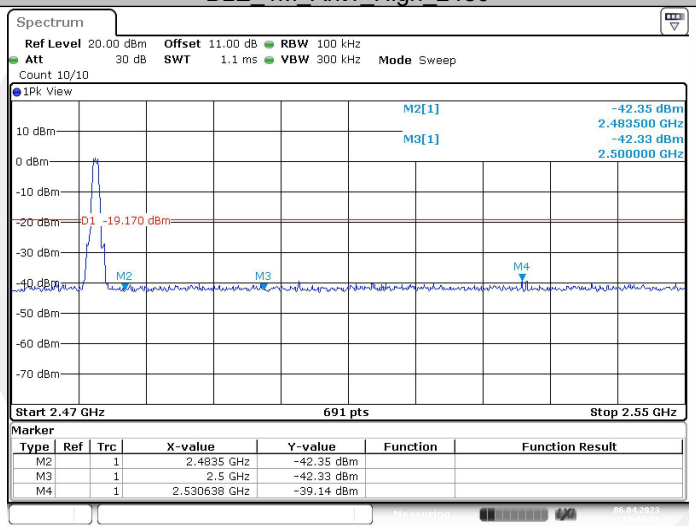

Date: 6.APR.2023 14:43:11

BLE_2M_Ant1_Low_2402

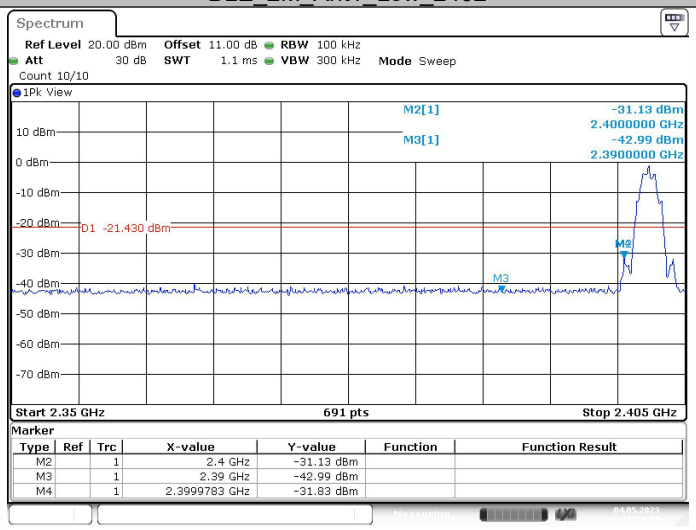

Date: 4.MAY.2023 15:52:37