User Manual

Smart Door Lock

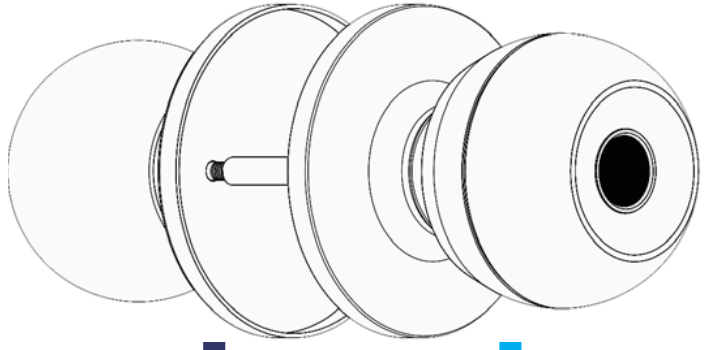

CONTENTS

INSTALLATION GUIDE 2
Prepare Door and Check Dimensions 3
Install Latch and Strike 4
Pull out the Interior Knob &Install the Exterior Knob 5
Install the Interior Knob 6
OPERATION GUIDE 7
APP GUIDE 10
Account Registration 10
Pairing Your Lock 11
App Unlock/Lock 13
Member Management and Fingerprints 15
Create Smart Scenes 17
Setting 18
Device Information Set Up 19
SPECIFICATIONS 20
FCC WARNING 21

INSTALLATION GUIDE

Tools Required			
	Phillips Screwdriver		Tape Measure

Parts(Components list)				
Exterior Knob 1PC	Interior Knob 1PC	Screw A 4PCS	Screw B 2PCS	Latch 1PC
Strike Plate 1PC	Strike Box 1PC	Key 2PCS	Pin 1PCS	User Manual 1PC

Prepare Door and Check Dimensions

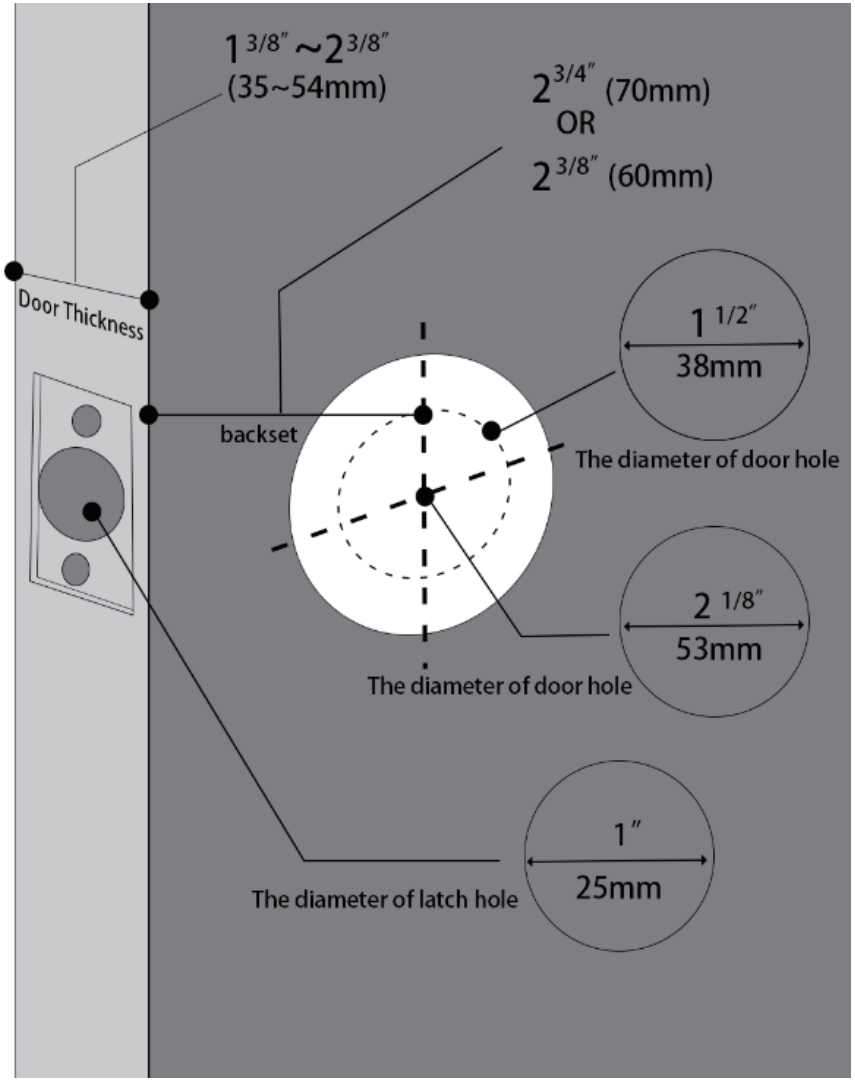

Install Latch and Strike

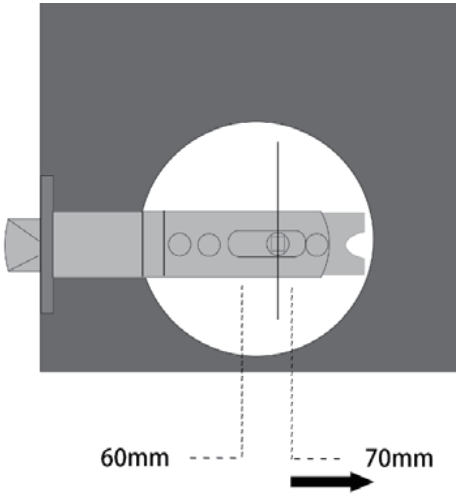

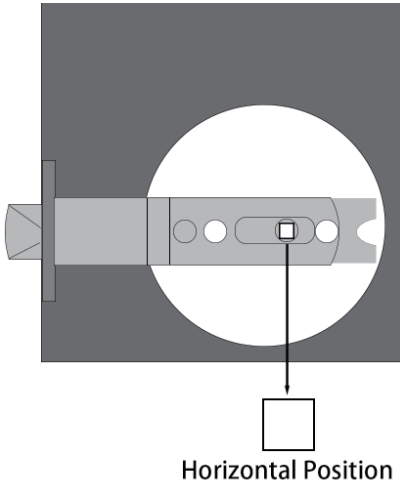

1. Hold the latch in front of the door hole so that the latch is flush with the door edge.
2. Press the squared-shaped hole and Pull the latch to Set the latch backset to 60mm(2-3/8") or 70mm(2-3/4") to fit your door hole.
3. Make sure the squared-shaped hole place the horizontal position.

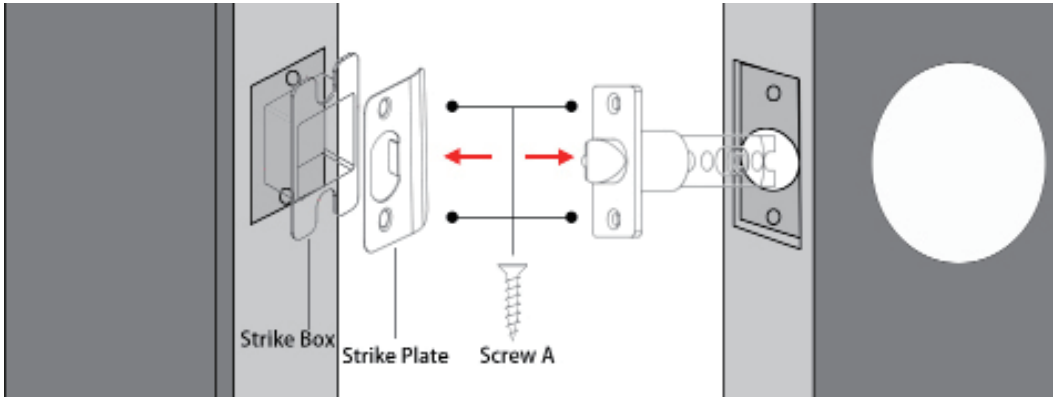

1. Insert the latch into the door hole,and tighten Screw A to fix the latch.
2. Install strike box and strike plate with screw A into the door frame.

Pull out the Interior Knob

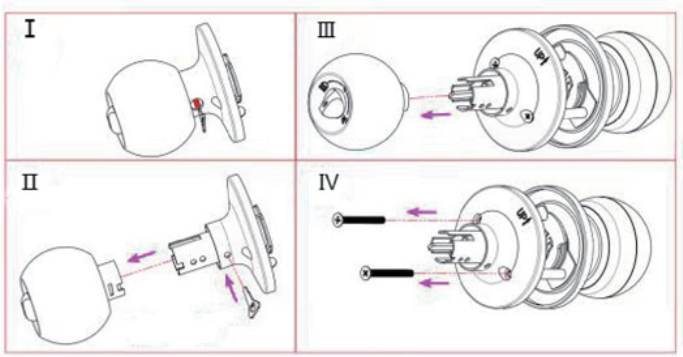

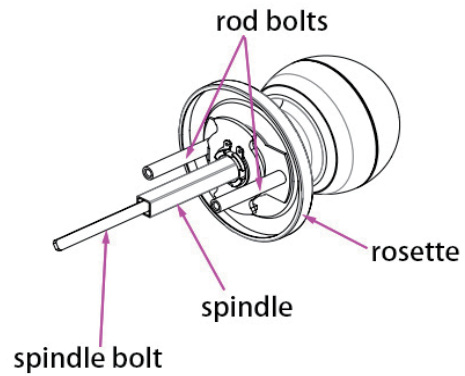

As the left figure shows, insert the pin into the hole and separate the rosette from the Interior Knob. Then use a screwdrive to remove the screw B.

Install the Exterior Knob

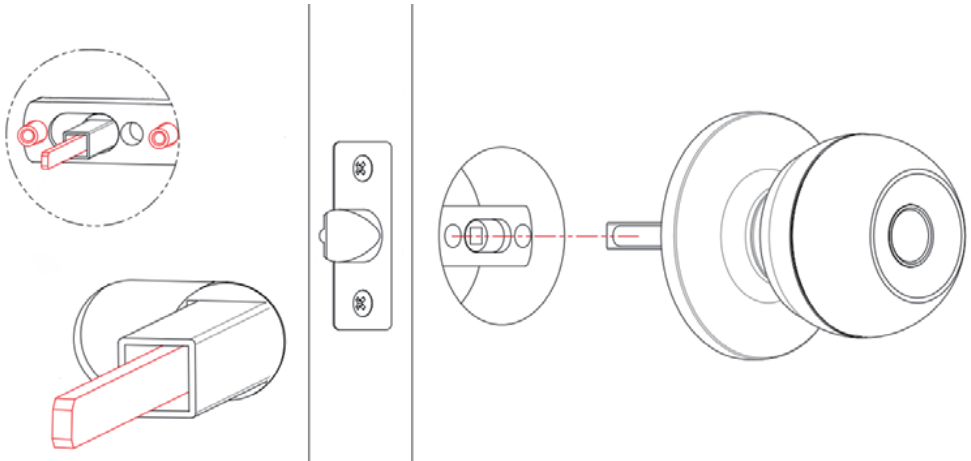

As shown above,install the Exterior Knob onto the door with the rod bolts going through the circular holes on the Latch, and spindle going through the square-shaped(center)hole.

Install the Interior Knob

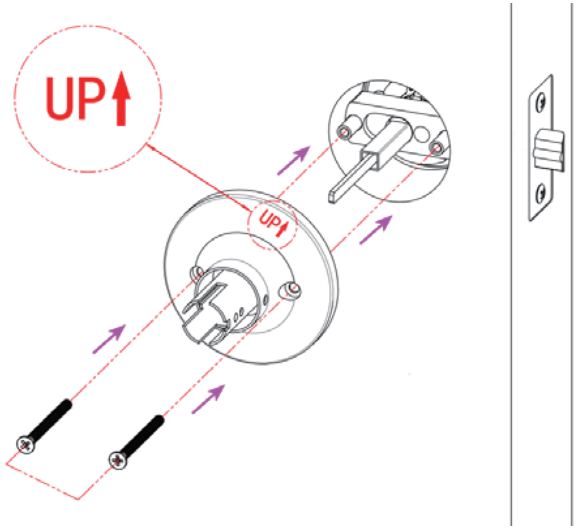

The "up" mark above the rosette should face upward.

Install the rosette onto the door with the rod bolts aligning the circular holes, and spindle aligning the circular holes, and spindle aligning the square-shped (center)hole. Then insert the Screw B into the circular holes and tighten them to secure the rosette.

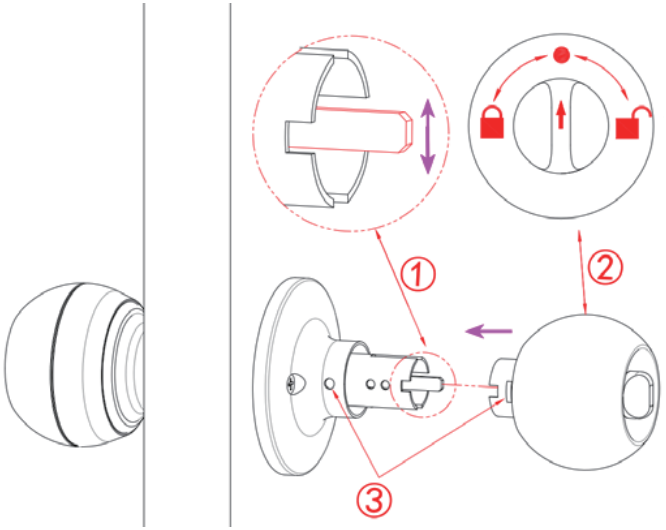

Firstly, make sure the bar in spindle is in the vertical position as shown above. Secondly, rotate the thumb turn to the circular mark. Lastly, insert the Interior Knob into the rosette by aligning the hole of Interior Knob with the bar and aligning the rectangular hole at the edge of the interior knob with the circular hole at the edge of the rosette.

OPERATION GUIDE

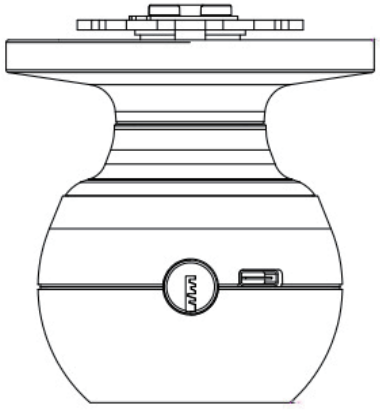

Key To Unlock

Insert the key into the keyhole at the edge of the Exterior Knob and key 90° to the unlock, then turn the Exterior Knob to open the door.

Restore the Factory Setting

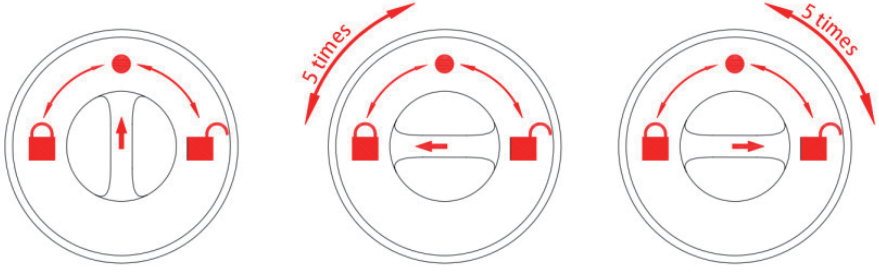

Rotate the thumb turn from the circular mark to the lock sign on the left and then return the thumb tun to the circular mark, after repeat this operation 5 times, the same operation towards the right for 5 times. After that, you will hear the long beep and the fingerprint identification area flashes green.
Any fingerprints can unlock the lock.

Normal Mode

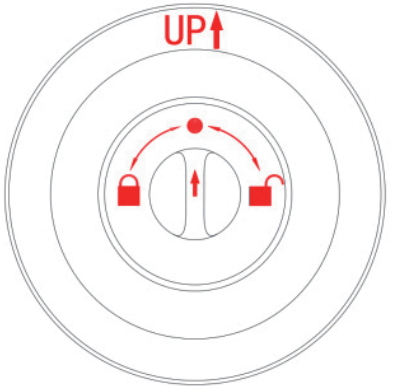

As the figure shows, rotate the thumb turn to unlock sign on the left to active privacy mode. In the privacy mode, both members and administractors can unlock via app. Only the administractor's fingerprint can unlock.

Passage Mode

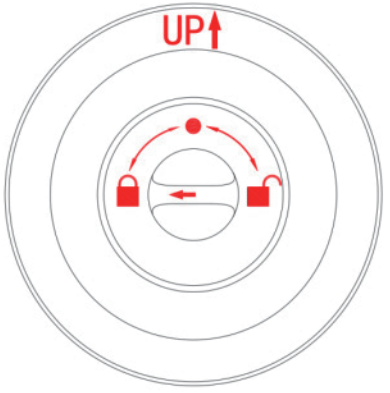

As shown above， the thumb turn to unlock sign on the right to active passage mode. After activacting passage mode, the door knob is always unlocked.

Privacy Mode

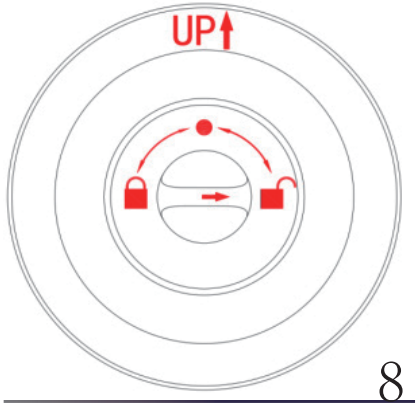

As the figure shows, rotate the thumb turn to lock sign on the left to active privacy mode.Both members and administrators can lock via app.Only the administrator's fingerprint can unlock.

Low Power Indication

After being unlocked by fingerprint or APP successfully, the buzzer beeps once, and the fingerprint identification area flashes green and then flashes red.

Action	Buzzer	Indicator
Power on	Beep once	Inactive
Fingerprint added successfully	Long Beep	Stay green for a while
Unlocking successful	Beeps once	Blinks green once
Unlocking failure	Beeps twice	Blinks red once
Low battery warning	Beeps once (after using fingerprint or app to unlock)	Blinks green then blinks red (after using fingerprint or app to unlock)
Resetting successful	Long Beep	Blinks green once

APP GUIDE

Scan the Tuya QR Code to download the app or search"Tuya" in APP Store (IOS) and Google Play (Android) for download.

Tuya QR Code

Account Registration

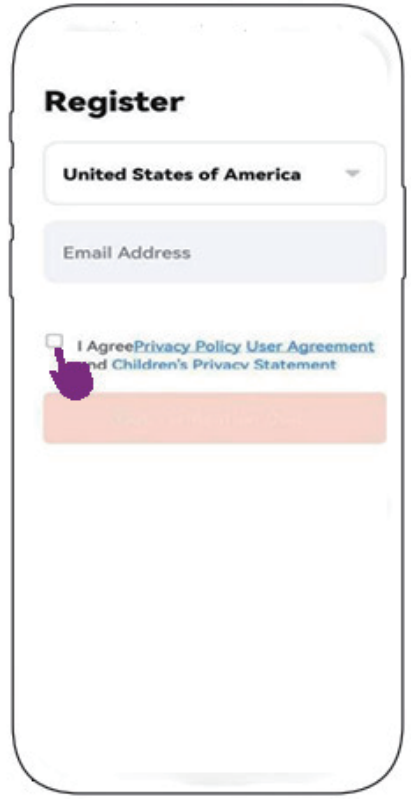

Register a new account (Email Address) or log in with an existing account.

Pair the Lock

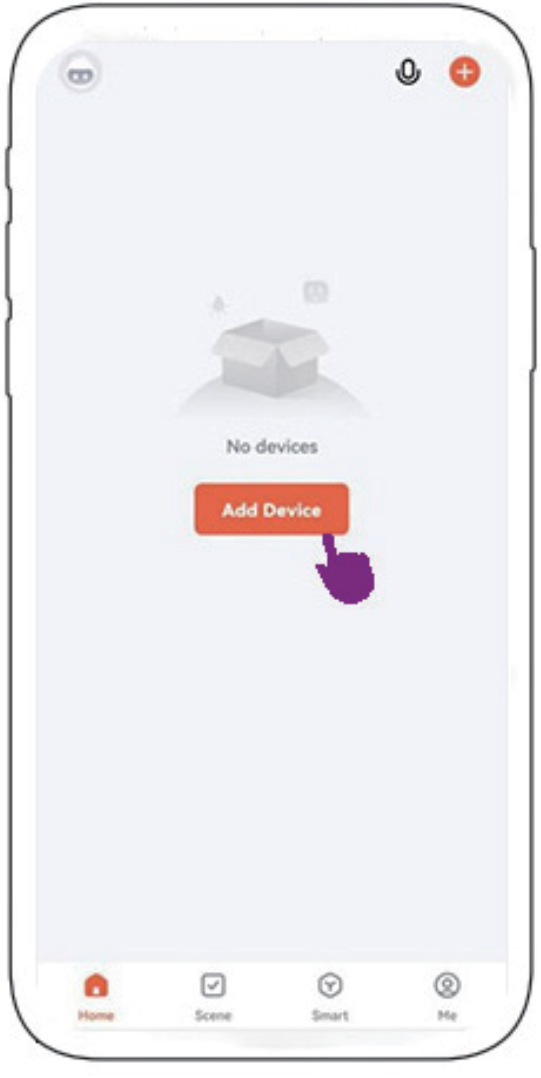

Turn on your phone's Buletooth and stay near the lock (within 3 meters) Click "Add Device" on the App.

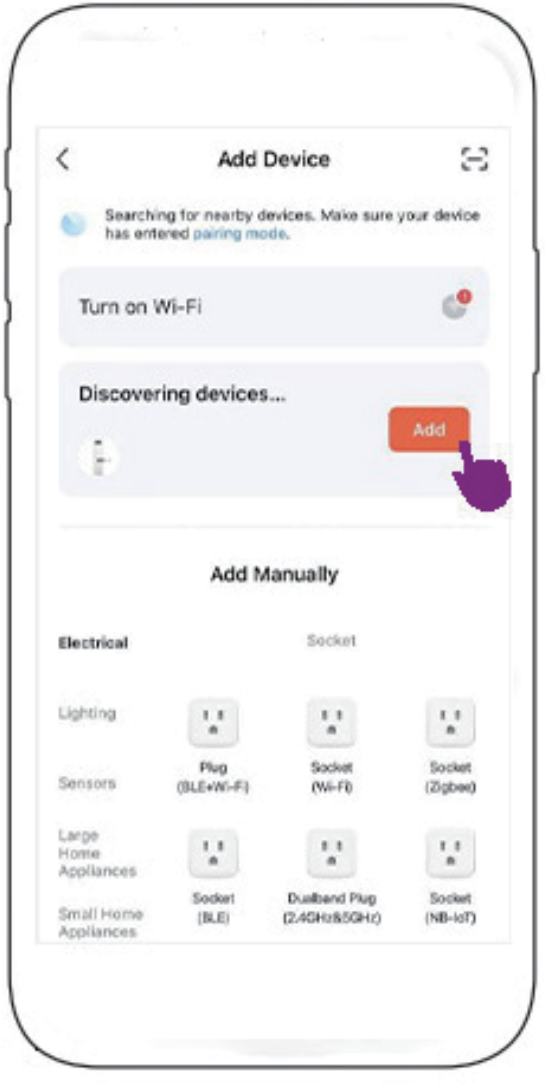

Add the lock.

Pair the Lock

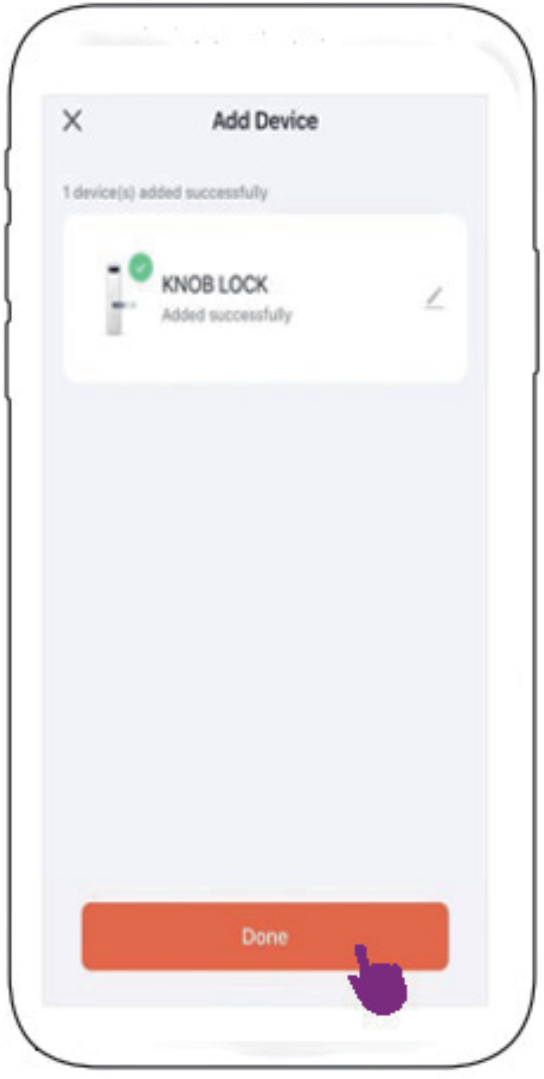

Successful connection! You can click this icon “ ” to rename the lock or just click “Done” to complete the pairing.

APP Unlock/Lock

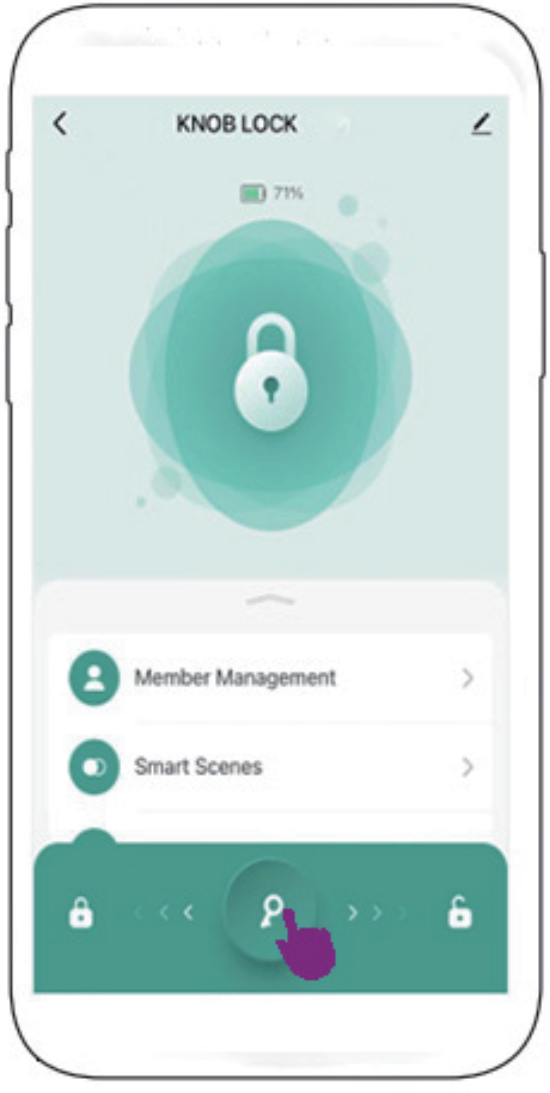

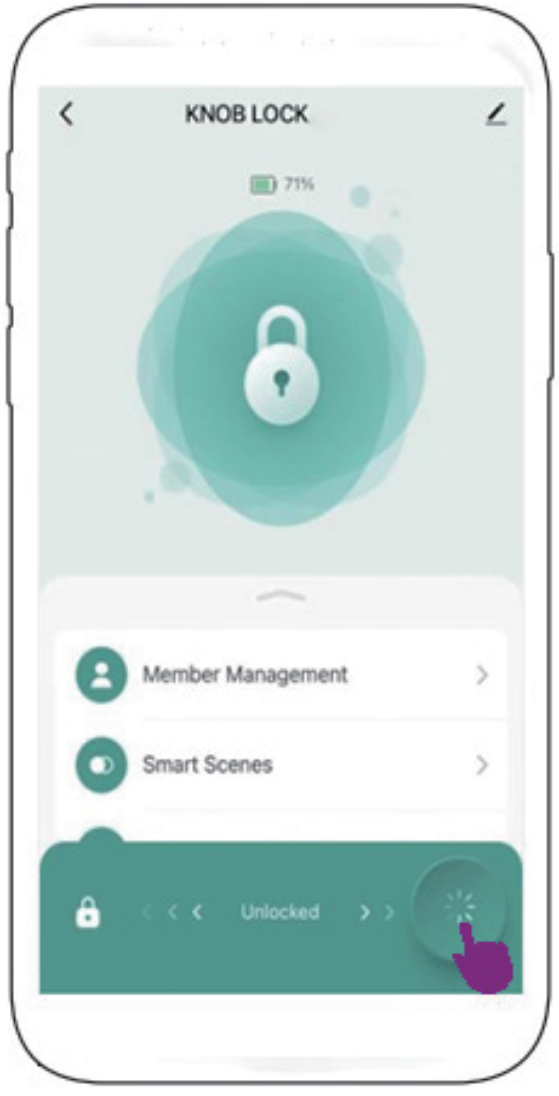

Unlock: Hold and drag the icon “ ” to the icon “ ”

APP Unlock/Lock

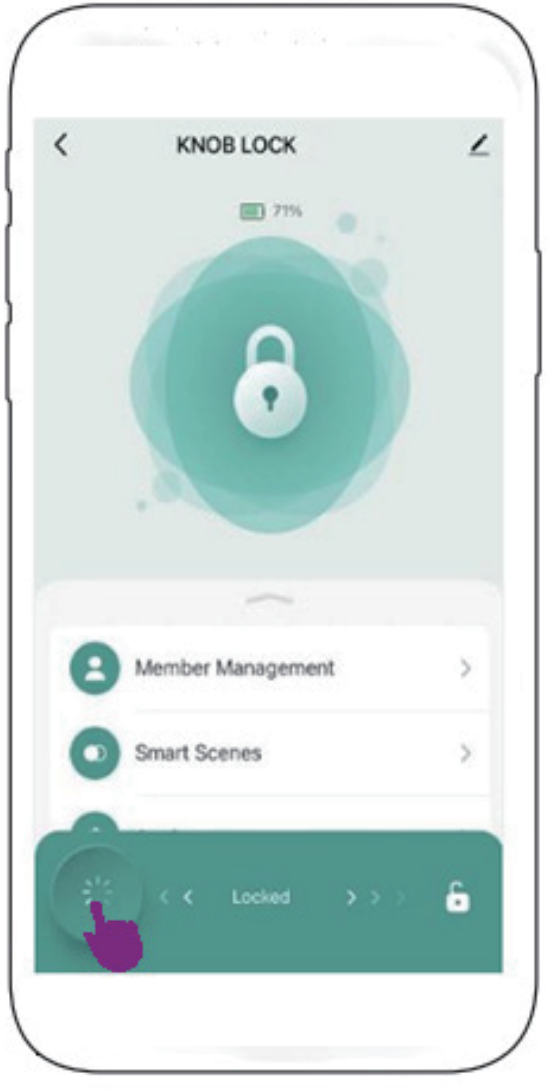

Lock: Hold and drag the icon “ ” to the icon “ ” .

Memeber Management &Fingerprint Input

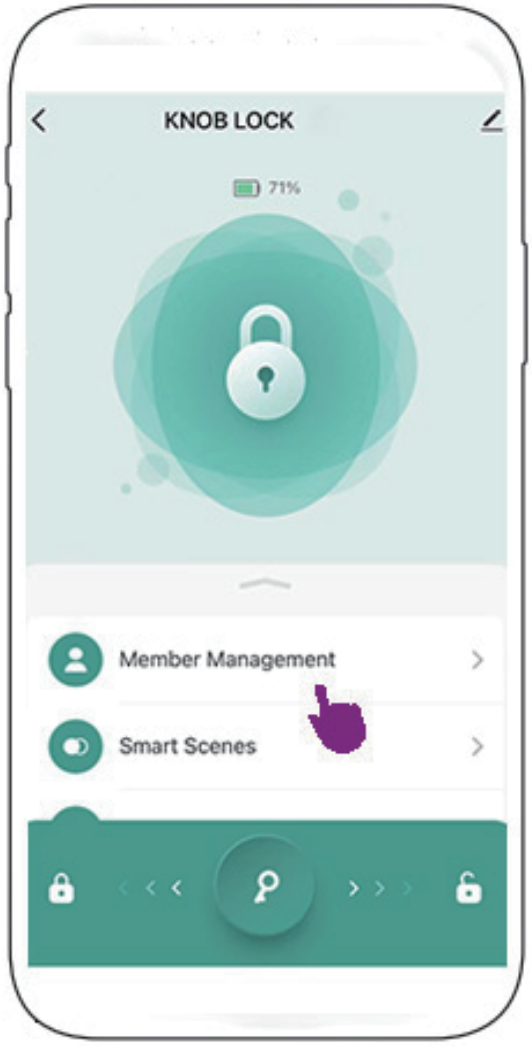

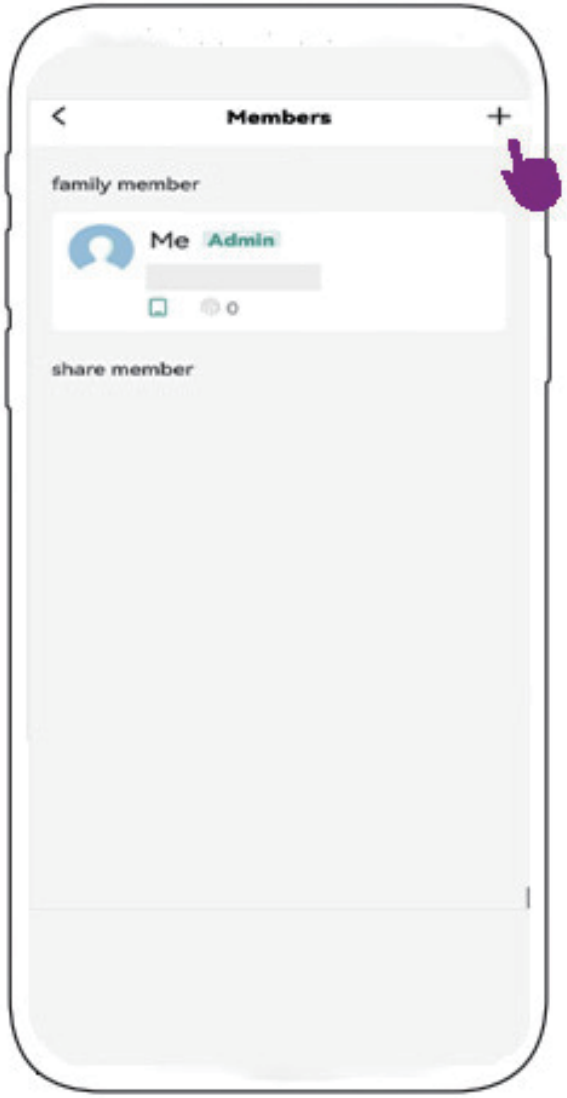

Select "Member Management" and tap "+" to add/share/cancel members.

Memeber Management &Fingerprint Input

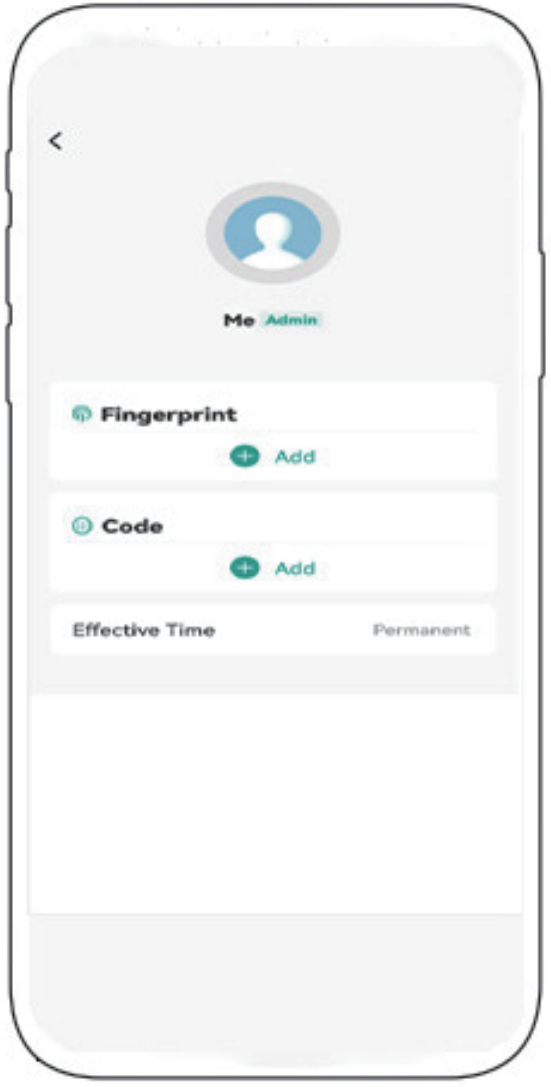

Press “Me” and follow the instructions to add fingerprints.

Creat Smart Scenes

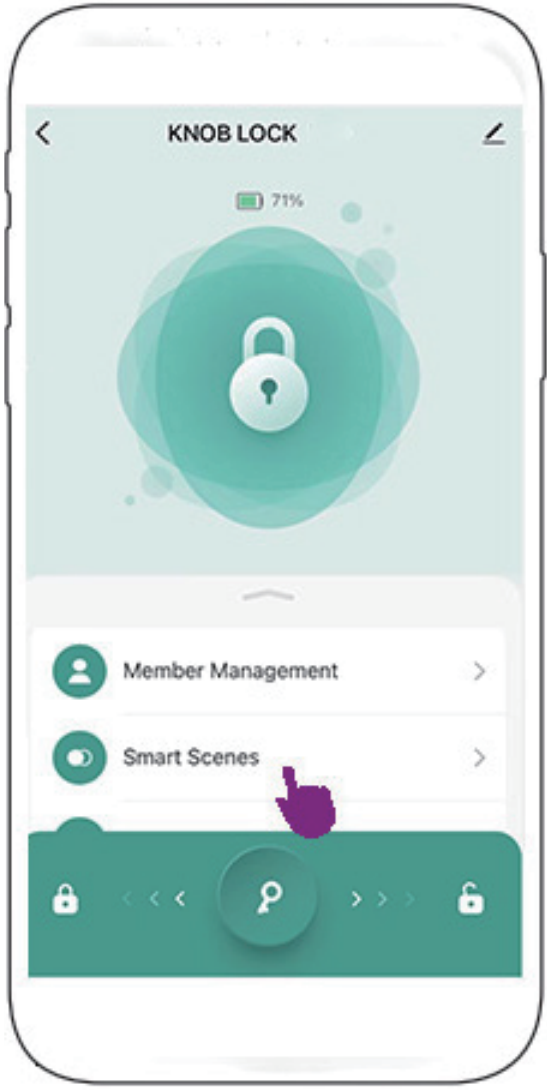

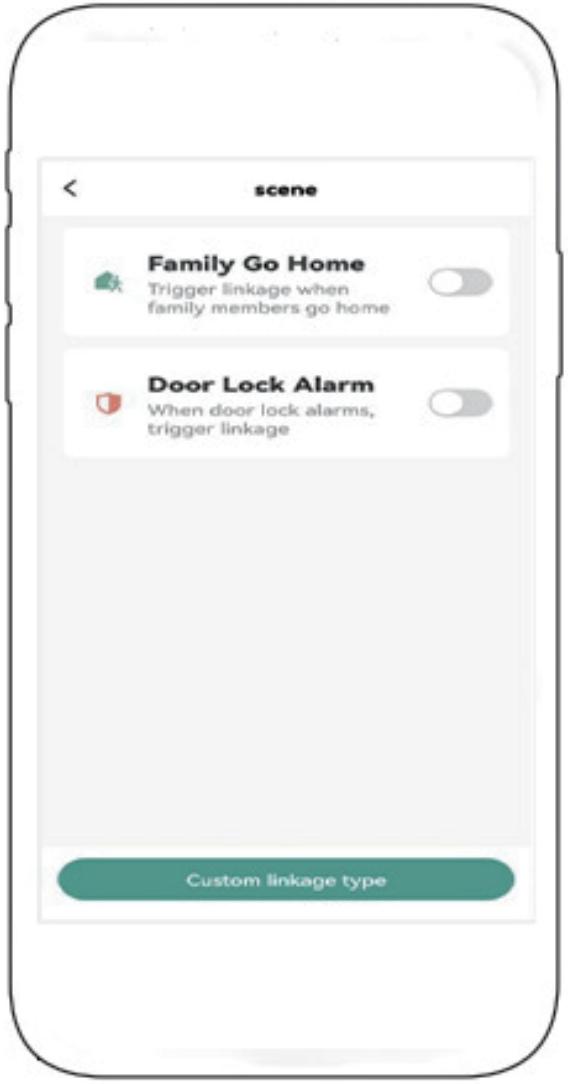

Select "Smart Scenes" on the screen. Then choose the scenes you prefer to set intelligent interactions.

Setting

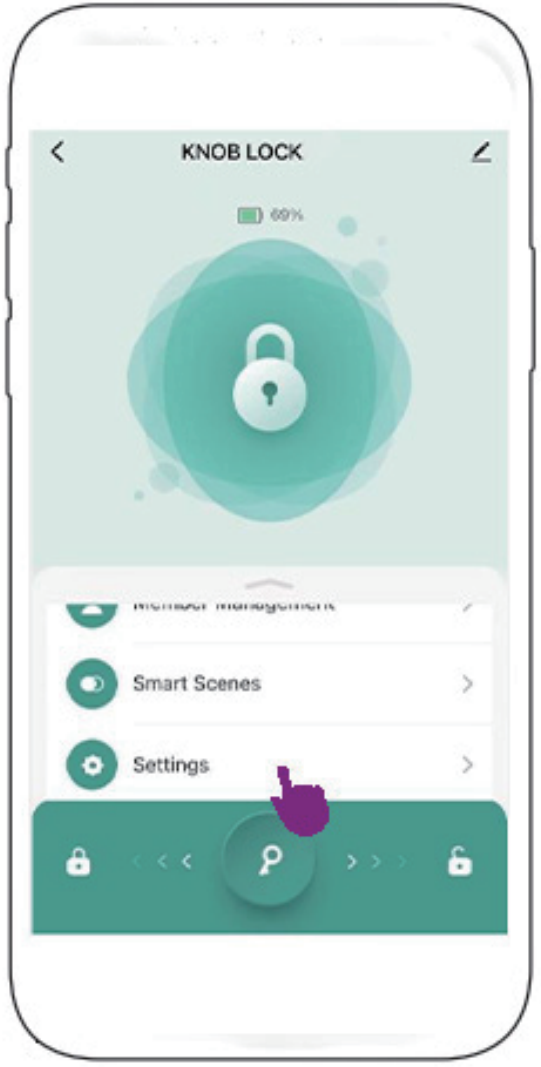

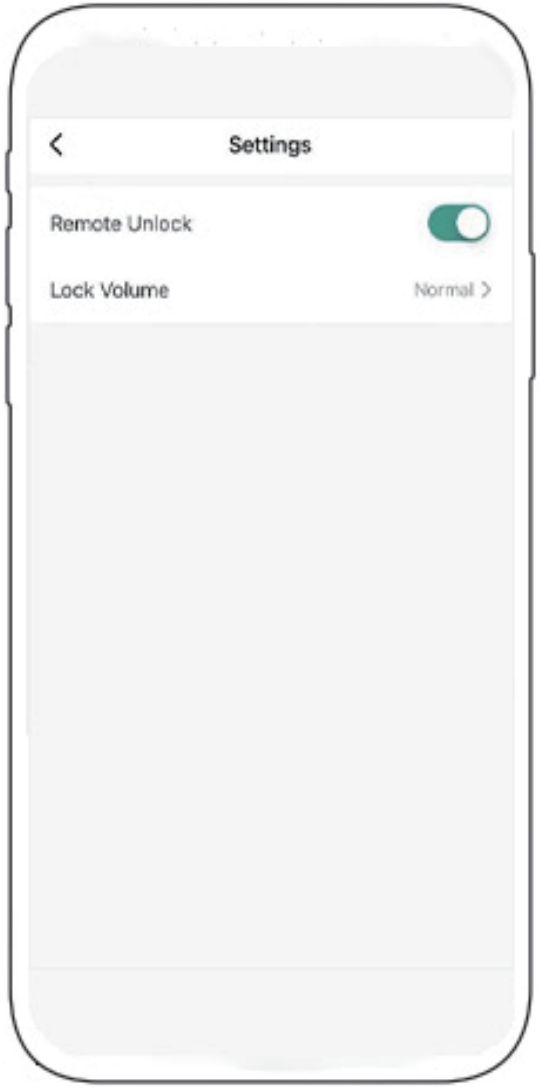

Choose "Settings" to turn on/off "Remote Unlock" and set up lock volume.
Note: Remote unlocking requires a gateway connection.

Device Information Set Up

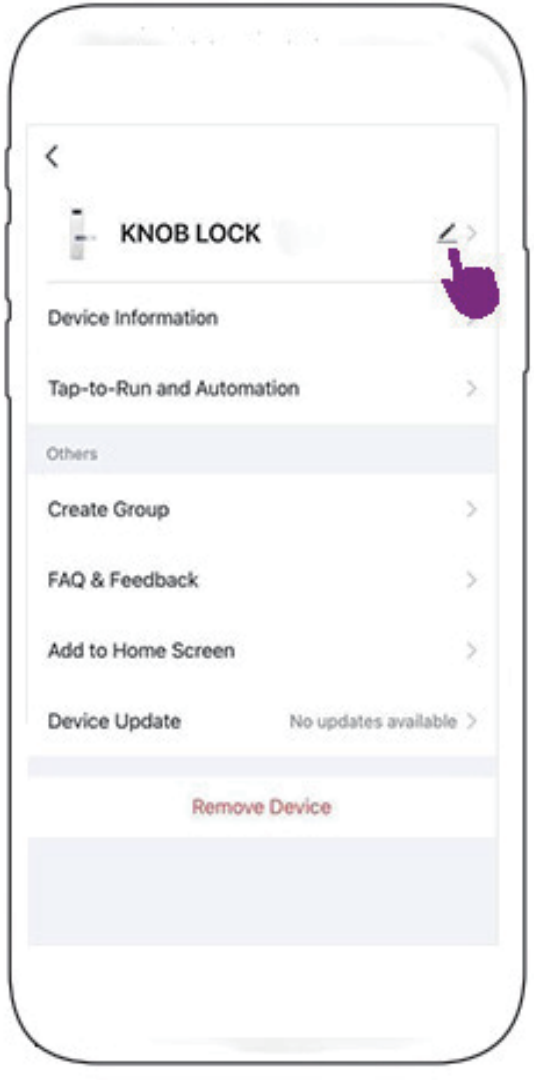

Press the icon “ ” to check and set up the relevant information.

SPECIFICATIONS

Technical Parameters

Name	Parameter Description
USB	Type-C/5V2A
Fingerprints max	20
Low power warning	3.5V±0.2
Voltage range	3.0~4.2V
Stand-by current	<90μA
Working current	<500mA
Unlock time	≈1.5sec
Working temperature	23 ℉ ~131 ℉ (5℃ ~55℃)

FCC CAUTION

Any changes or modifications not expressly approved by the party responsible for compliance could void the user's authority to operate this equipment.

This device complies with Part 15 of the FCC Rules. Operation is subject to the following two conditions:
(1) This device may not cause harmful interference, and
(2) this device must accept any interference received, including interference that may cause undesired operation.
This device and its antenna(s) must not be co-located or operating in conjunction with any other antenna or transmitter

NOTE:
This equipment has been tested and found to comply with the limits for a Class B digital device, pursuant to Part 15 of the FCC Rules.
These limits are designed to provide reasonable protection against harmful interference in a residential installation. This equipment generates, uses and can radiate radio frequency energy and, if not installed and used in accordance with the instructions, may cause harmful interference to radio communications.
However, there is no guarantee that interference will not occur in a particular installation.
If this equipment does cause harmful interference to radio or television reception, which can be determined by turning the equipment off and on, the user is encouraged to try to correct the interference by one or more of the following measures:
-- Reorient or relocate the receiving antenna.
-- Increase the separation between the equipment and receiver.
-- Connect the equipment into an outlet on a circuit different from that to which the receiver is connected.
-- Consult the dealer or an experienced radio/TV technician for help.
To maintain compliance with FCC's RF Exposure guidelines, This equipment should be installed and operated with minimum distance between 20cm the radiator your body Use only the supplied antenna.
FCC ID: 2BB9K-DS02