Luckin Coffee Dispenser-Dairy Mark I

LKMD-08

User manual

documentation

Dairy Dispenser LKMD-08 User Manual Chinese edition
Version: 2 1- 5/2023

version	Revised Content	compose	Date of writing	Audit	Review date
V1.0	first edition	Gao Wenlong	2023. 3. 17	Wang Jiangfeng	2023.3.30
In2. 0	proofread	Gao Wenlong	2023.5	Cheng Yue	2023.5
V2.1	Add manufacturer information	Gao Wenlong	2023.5	Luckin QA	2023. 5

Productor

MegaRobo Technologies Co., Ltd
No. 277, Dongping Street, Suzhou Industrial Park, Suzhou, Jiangsu Province, China
Phone: 400 0601 017 Business consulting and customer service
010-6060 3226 Company global
Email: OFFICIALMAIL@MEGAROBO.TECH

Manufacturer

Weiswasser Environmental Technology (Jiaxing) Co., Ltd
No.3 58, Sandian Road, Qixing Street, Nanhu District, Jiaxing City, Zhejiang Province
Tel: 0573 -83387425 China factory

The instructions contained in this user manual, especially safety instructions, must be observed. This helps avoid personal injury and property damage. Ensure that all personnel have access to the user manual.

Thank you for purchasing the LKMD-08 Dairy Dispenser.
You can find out all the features of the LKMD-08 in the user manual.
If you need more information or have any other questions about the machine, please contact your local service organization or our support team. We hope that LKMD-08 can bring you a pleasant experience.

Copyright Notice

Copying, even partial, is prohibited. No part may be reproduced in any form, nor may any part be used, edited or transmitted by any electronic means (photocopying, photography, tape or other recording program) without the authorization of MegaRobo® . All rights reserved, in particular reproduction, translation, editing, distribution and industrial property and sound recordings.

directory

directory 1

Safety Note 1 1

1.1 Intended Use 1

1.2 Introduction 2

1.2.1 The importance of safety instructions 2

1.2.2 Ignoring Security Rules 2

1.3 Implementation Standards 2

1.4 General Safety Instructions 3

1.5 Disposal Instructions 5

1.6 Deactivation 6

1.6.1 Packaging Materials 6

1.6.2 Disassembling the Device 6

1.7 Special Safety Instructions and Signs 6

1.7.1 Flags 6

1.8 Package Marks 7

Description 2 8

2.1 Description 8

2.1.1 Main Functions 8

2.2 Overview 9

2.2.1 Top-stage section 9

2.2.2 Offstage 10

2.2.3 Important accessories 13

2.2.4 Final Assembly Overview 14

2.3 Technical Data 15

2.3.1 Performance 15

directory

2.3.2 Dimensions and weight of the machine 15
- On-stage part 15
- Offstage section 15

2.3.3 Electrical data and power supply 16
2.3.4 Environmental Conditions 16
2.3.5 Other Specifications 17
2.3.6 Nameplate 18

2.4 Luckin Coffee APP 18

Debug 3 19

3.1 Requirements to be met before commissioning 19

3.2 Specific parameters/factory reset 19

Use 4 21

4.1 Daily Use Instructions 21

4.2 Boot 22

4.3 Supplementary Materials 23

4.3.1 Feeding in the condition of the milk box 23
4.3.2 Feeding in the state of the milk pack 25

4.4 Confirm machine status 26

4.5 Making drinks 27

4.5.1 Use Listing Cup Listings 27
4.5.2 Production using a milk tank 28
4.5.3 Use tall containers such as blenders/shakers 29
4.5.4 Using Screen Clicks to Select Products 30

4.6 Shutdown 30

Cleaning 5 31

5.1 Cleaning Schedule 31

5.2 Cleaning Operations 32

5.2.1 Pipeline cleaning 32
5.2.2 Surface cleaning of the equipment 33
5.2.3 Equipment material pipeline cleaning 33

Calibrate 6 36

directory

6.1 Factory calibration/defaults..... 36

Maintenance 7 38

7.1 Maintenance intervals..... 38

7.2 Maintenance Content..... 39

Troubleshooting 8 41

8.1 Examples of error messages (courtesy of Luckin)..... 41

8.2 List of faults 42

8.3 Frequently Asked Questions..... 45

Option 9..... 46

9.1 Universal Options..... 46

9.2 List of wearing parts 46

9.3 General Accessories 47

Packaging & Shipping 10..... 48

10.1 Packing List..... 49

10.2 Warehousing & transportation 50

10.3 Installation 50

Warranty 11.....51

11.1 Warranty Limitations..... 51

11. 2 Glossary 52

1 1.2.1 Personnel..... 52

Safety Note 1

Chapter overview

This chapter describes the intended use and safety instructions designed to ensure the safe and trouble-free operation of the dairy dispenser LKMD-08 and its associated software. Processing and storage conditions are also described.

The instructions contained in this user manual, especially safety instructions, must be observed. Ensure that all personnel have access to the user manual. Before doing anything with the LKMD-08, you must read and fully understand the contents of this chapter. If you have any questions, please consult sales or call Magga.

1.1 Intended Use

The LKMD–08 Dairy Dispenser is designed for dosing dairy products, including various types of dairy, milk bales or boxes Dairy in all its forms.

This dairy dispenser is designed for indoor use and is intended for commercial use only (e.g. restaurants, beverage shops and hotels).

Do not use this dairy dispenser to make any other product or for any other purpose.

To change the dairy dispenser settings, you must have the appropriate access rights. For information, see 1 1.2.1 Personnel.

1.2 Introduction

1.2.1 The importance of safety instructions

To avoid personal accidents, equipment damage or environmental contamination, you must comply with this user manual and all safety instructions included with the machine.

Comply with the regulations and generally accepted technical rules applicable in the country of use of LKMD–08.

1.2.2 Ignoring Security Rules

Ignoring safety rules and existing legal and technical regulations can result in accidents, property damage or environmental pollution.

Ignoring the instructions for use given by the manufacturer may reduce the level of protection provided by the LKMD–08.

1.3 Implementation Standards

This **LKMD-08** complies with the following Chinese national standards:
GB4706 Safety Standard for Household and Similar Electrical Appliances.
GB4806 National Food Safety Standard for Food Contact Materials and Products.

Natural Sciences and Engineering Research Council of Canada
Conseil de recherches en sciences naturelles et en génie du Canada
Canada

Please take attention that changes or modification not expressly approved by the party responsible for compliance could void the user's authority to operate the equipment.

This device complies with Part 15 of the FCC Rules. Operation is subject to the following two conditions:
(1) This device may not cause harmful interference, and
(2) This device must accept any interference received, including interference that may cause undesired operation.

This device contains licence-exempt transmitter(s)/receiver(s) that comply with Innovation, Science and Economic Development Canada' s licence-exempt RSS(s). Operation is subject to the following two conditions:
(1) This device may not cause interference.

(2) This device must accept any interference, including interference that may cause undesired operation of the device.

l'appareil contient des émetteurs/récepteurs exempts de licence qui sont conformes aux CNR exempts de licence d' Innovation, Sciences et Développement économique Canada. L' exploitation est soumise aux deux conditions suivantes :

(1) l'appareil ne doit pas produire de brouillage,
(2) l'utilisateur de l'appareil doit accepter tout brouillage radioélectrique subi, même si le brouillage est susceptible d'en compromettre le fonctionnement.

This equipment complies with FCC/IC RSS-102 radiation exposure limits set forth for an uncontrolled environment. This equipment should be installed and operated with minimum distance 20cm between the radiator & your body.

ce matériel est conforme aux limites de dose d'exposition aux rayonnements, FCC / CNR-102 énoncée dans un autre environnement.cette eqipment devrait être installé et exploité avec distance minimale de 20 entre le radiateur et votre corps.

1.4 General Safety Instructions

The recommended maximum length of the power cord is 2 meters.
In addition to sensors and cables sold by MegaRobo® o as replacement parts for internal components, the use of non-specified accessories, sensors and cables may result in increased radiation or reduced immunity of the LKMD-08.

Keep LKMD-08 away from potential sources of interference
Do not expose LKMD-08 to direct sunlight, heat, dust, or excessive humidity (use only in a clean food service environment).

Risk of electric shock
In the event of a problem or emergency, it needs to be disconnected via the power plug, so the power plug must be placed within easy reach.
Never use a damaged or defective machine with a power cord. If there are signs of damage, such as a burning smell or visible insulation damage, unplug the electrical plug, stop using it immediately and contact local services.
The power cord should only be serviced by a service designated by the manufacturer.
Make sure the cable is kept away from hot surfaces.

1 Safety instructions

Be careful to make sure that the power cord does not get stuck and does not touch sharp edges.
Repair, commissioning and maintenance operations should only be carried out by the service organization designated by the manufacturer.
Never turn on the machine and do not remove any parts unless explicitly stated in this manual.
Only the LKMD-08 can be connected to the specified power supply and the power network with protective earthing.
Do not immerse this product in water.

Use only the products, accessories, spare parts and software specified in this manual.
If you have secondary software requirements, please contact the manufacturer in advance to obtain the SDK development kit.

Do not place any items on or above the LKMD-08.
This machine is not suitable for installation in areas where water jets may be used.
This machine must not be located on surfaces sprayed or cleaned with water pipes, steam nozzles, steam cleaners or similar equipment.
The machine must be placed on a horizontal, waterproof, heat-resistant and sturdy base and be able to withstand its weight.
For operational, maintenance and safety reasons, when installing the machine, the clearance between the back and sides of the machine and the building or unapproved equipment should not be less than 50 mm. It is recommended to have at least 3 50 mm of working space in front of the upper part of the dairy dispenser table and the mounting surface at least 800 mm above the floor. Dairy dispenser wiring should be routed under the counter, please leave space for cables.
This machine should only be installed in locations where only trained personnel can use and maintain it. See 1 1.2.1 Personnel.
The machine must be powered on exactly according to the information on the nameplate (see [2.3.6 Nameplate]).

It must be cleaned regularly, more than 24 hours (1 day) do not clean, need to be cleaned to ensure that the pipeline is clean, more than 48 hours of use, need to be cleaned and placed to prevent dairy deterioration Food safety risks. For maintenance methods and frequencies, please refer to [7 Maintenance].
It is forbidden to use a water sprayer to clean the machine.
Ensure regular maintenance of the machine to ensure safe and efficient performance. See [7.3 Maintenance].
Risk of spoilage of dairy residues: If machines are not cleaned regularly, dairy residues can accumulate in machines, grow bacteria and clog lines. See [5 Cleaning] Cleaning Dairy Dispensers and Accessories.

If certain persons (including children) are unable to use this machine safely due to physical, sensory or cognitive abilities, or due to lack of experience or knowledge, they are not allowed to operate this machine unless under the supervision or guidance of the person in charge.
This machine is not intended for children under 8 years of age. Children over 8 years of age who have physical, sensory or intellectual impairments may not operate the machine alone and must be supervised at all times, children are prohibited from manipulating the machine and children are prohibited from performing any cleaning operations on the machine.

Do not place LKMD-08 or any of its components in the dishwasher.
Never use dairy products with altered traits.
If it is not used for a long time (short-term storage), after thorough cleaning, turn off the machine using the main power switch.

1.5 Disposal Instructions

Materials must be disposed of and/or recycled in accordance with current legislation.

This machine and its accessories must be recycled.

Electrical and electronic equipment and accessories need to be collected separately for recycling.

Electrical and electronic equipment may contain hazardous substances that pose a hazard to health and the environment. The owner must return the device to the dealer or establish direct contact with an approved establishment in order to dispose of and recycle such equipment.

symbol	desc
	Separate collection of electrical and electronic equipment.
	Recyclable/recyclable generic symbol

1.6 Deactivation

1.6.1 Packaging Materials

Packaging materials (cardboard, EPE, plastic bags, strapping) must be recycled or disposed of in accordance with local regulations.

1.6.2 Disassembling the Device

Disassembly and repair of the equipment may only be carried out by the professional personnel of the manufacturer or authorized agent service provider.

1.7 Special Safety Instructions and Signs

The corresponding safety instructions are described in the specific sections. These instructions are as important as the general safety instructions contained in this chapter and should be strictly followed.

1.7.1 Flags

The following logos are used on the LKMD-08. The warnings are explained in the table.

sign	meaning	paraphrase
	Note, refer to the accompanying documentation	-
	There is an electrical hazard	Electric shock During maintenance work, it is important to use the main switch to power off the machine
	Protective earthing	-

1.8 Package Marks

sign	meaning	paraphrase
	Fragile items, handle with care	-
	Keep dry	-
	Do not invert	-
	Maximum and minimum humidity limits	-
	Maximum and minimum temperature limits	-
	Limit on the number of stacking layers. The number of vertical stacking layers must not exceed the specified number of items «n»	-
	Serial number	-

Description 2

Chapter overview

This section provides an overview and introduction to the Swiss-Dairy Dispenser LKMD-08.

The technical specifications, illustrations and dimensions contained in these instructions are for presentation purposes only and no claims may be made on this basis.
For more information, please consult the manufacturer and see the contact details on the title page.

2.1 Description

2.1.1 Main Functions

LKMD-08 Dairy Dispenser adapts to the diversified store operating environment, adapts to the situation of Luckin stores, and supports the following functions:

serial number	function	description
1	Multi-way dairy quantification	By scanning the code, single-channel, multiple-channel/multi-channel dairy products can be produced
2	Lack of material is reported	When the dairy in the silo is empty, the empty material status is reported
3	Automatic cleaning	Perform cleaning of the output pipeline/whole machine pipeline
4	Accuracy calibration	Through a series of operations, the production accuracy of the equipment is restored to a high level
5	Independent production system	Two separate production systems to avoid mixing animal/plant dairy products
6	Fault escalation	Self-test and reporting of multiple fault types
7	Drawer type material silo	Built-in 8 drawer type material silos Pull-out design allows for faster replenishment

2.2 Overview

2.2.1 Top-stage section

(1) Touch screen

(2) USB interface

(3) Indicator light

(4) Dairy dispenser outlet

(5) Convenient cup holder

(6) Code scanner

(7) Removable drainage tray

(8) Power switch

2.2.2 Offstage

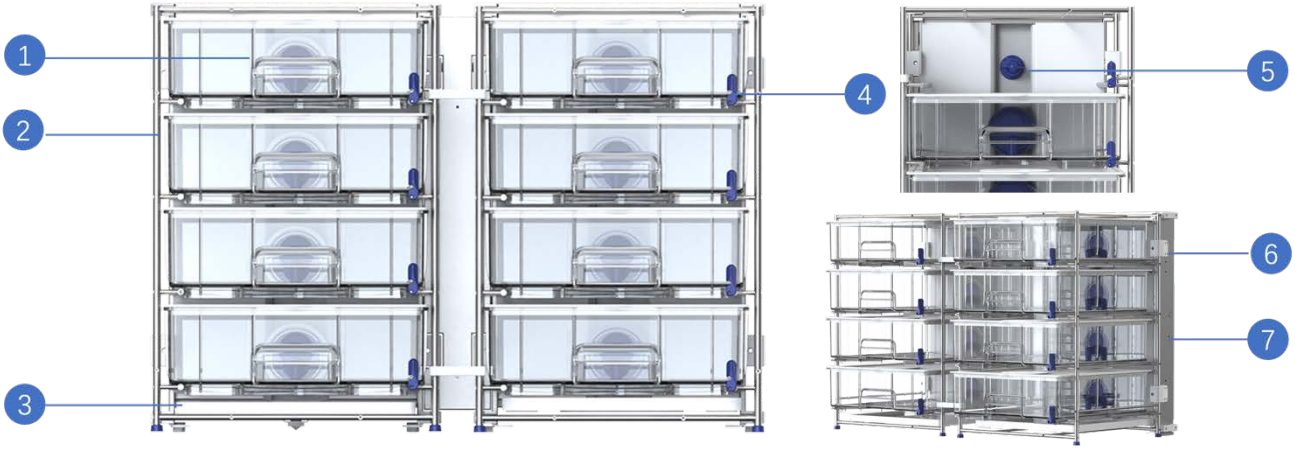

(1) Material box

(2) Removable shelves

(3) Water tray

(4) Check wrench

(5) Material interface

(6) Shelf quick release connectors

(7) Equipment electronic control module

2 description

➢/ Milk carton solutions

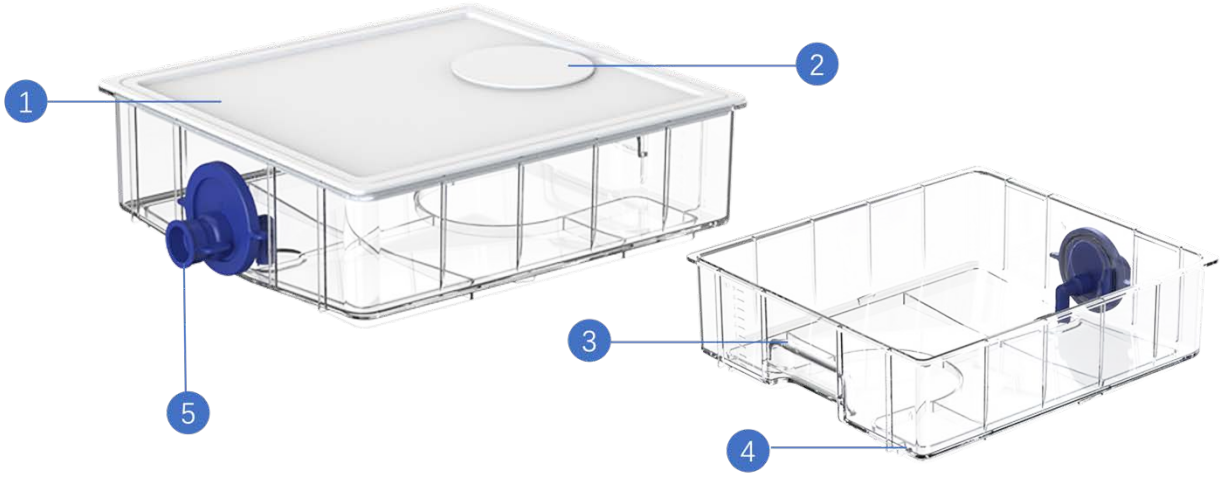

(1) Silo cover

(2) Quick feeding port (including cover).

(3) Silo buckle

(4) Check wrench card slot

(5) Material joint assembly

(6) Silicone valve fastening ring

(7) Silicone valve

(8) Joint assembly fastening ring

(9) Silo connector

(10) Silo straw

2 description

➢/ Milk bag scheme

(1) The milk bag connector is at the position of the card

- •/ On the basis of the milk carton solution, remove the upper lid of the silo
- •/ Remove the material joint assembly

2.2.3 Important accessories

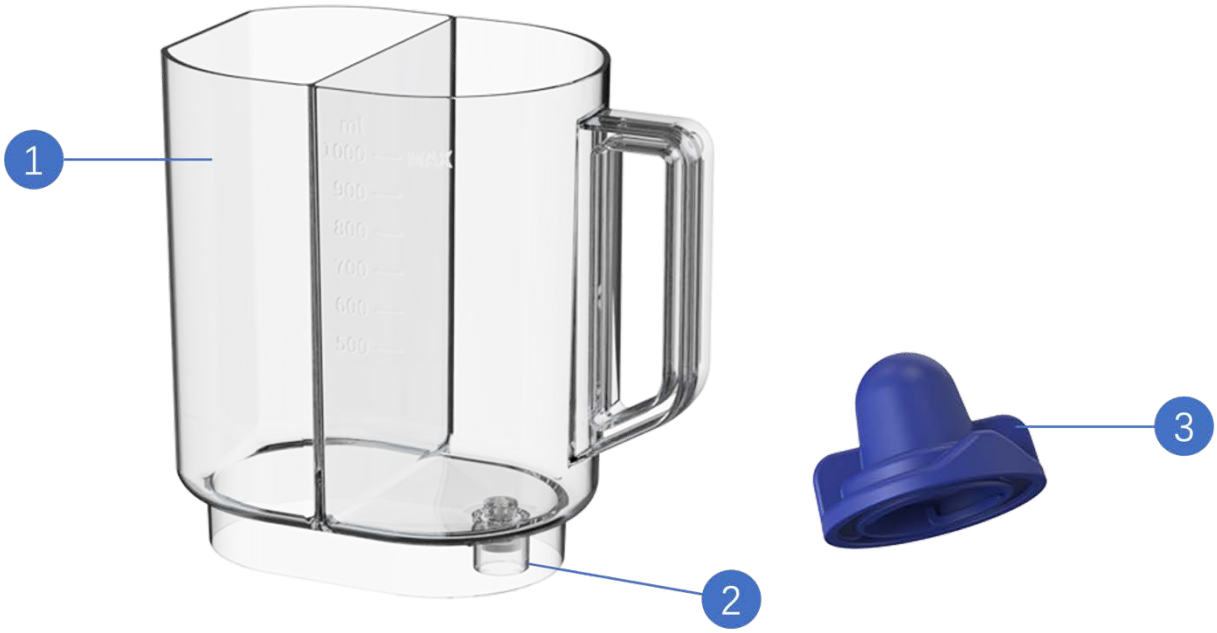

(1) Clean the liquid box (3) Clean the cap

(2) Clean the valve seat of the liquid tank

2.2.4 Final Assembly Overview

The freezer is not included in the product body and needs to be equipped additionally.

2.3 Technical Data

2.3.1 Performance

category	description
Production speed	300ml/15s
Production range	30ml-600ml, less than 30ml or greater than 300ml, production time and loss may be affected
Production precision	30-100ml, ±5ml 101-200ml, ±8ml 201~300ml, ±10ml Medium: Whole milk

2.3.2 Dimensions and weight of the machine

➢/ **On-stage part**

description	Bare metal	With packaging
Width(W)	220 mm	280 mm
Height(H)	360 mm	518 mm
Depth (D)	575 mm	850 mm
weight	10KG	15KG

➢/ **Offstage section**

description	Bare metal	With packaging
Width(W)	772 mm	850 mm
Height(H)	541 mm	660 mm
Depth (D)	465 mm	518 mm
weight	20KG	24KG

/

2.3.3 Electrical data and power supply

description	value
voltage	220V AC
frequency	50Hz
plug	Single-phase three-pin plug 10A
Rated power	80watts (Printing)

Power cords and plugs must comply with local regulations.

2.3.4 Environmental Conditions

Do not use the LKMD-08 outside the specified environmental conditions.

description	value
Operating temperature	5C°~35C°
Storage and transport temperature	0 °C ~ 40 °C, clean the equipment thoroughly and drain the water inside before storage
Operating humidity	10%~85%RH(non-condensing)
Storage and transportation humidity	5%~90%RH (non-condensing).
Transient overvoltage	Class II

2.3.5 Other Specifications

description	value
Maximum number of silos	8 pcs
Supported carton capacity	8L
Supported milk pack capacity	10L size milk bag for dairy dispenser
Silo in-place detection	Silo interface sensors 1in place 6
Material inspection	2 flow meters
Exhibit port support container	Luckin coffee store-specific milk tanks, store-specific 16 oz/12oz ice cups Store-only Blender
Scan the code category	QR codes, barcodes
Scanning accuracy	Reading accuracy> 10mil
Internet	1 个 10/100M 自适应 LAN 口,2.4G Wi-Fi 802.11a/b/g/n
Other interfaces	USB 2.0
graphical user interface	7 inches, 1024*600 pixels, ten-finger touch capacitive touch screen, vertical
Light	RGB three-color LED light

2.3.6 Nameplate

MEGAROBO

Company : MegaRobo Technologies Co., Ltd
Address : No. 277, Dongping Street, Suzhou Industrial Park, Suzhou, Jiangsu Province, China

Name	Luckin Coffee Dispenser- Dairy Mark I
Model	LKMD-08
Topside model	LKMD-08/T
Underside model	LKMD-08/U
Serial number	SRLKMD080223E0001
Product size	Topside: 220mm(W)*360mm(D)*575mm(H)
	Underside: 772mm(W)*465mm(D)*541mm(H)
Input voltage	120V AC
Frequency	60Hz
Rated power	80W
Weight	Topside: 5kg
	Underside: 37kg
Origin	Jiaxing, Zhejiang Province, China
Production date	May 2023
FCC ID	2BBCSLKMD08
IC	30648-LKMD08

SGS SANITATION 802154

SGS C US 802154

FC

CAN ICES-3 (B)/NMB-3(B)
DISCONNECT FROM SUPPLY CIRCUIT BEFORE OPENING
DECONNECTER DU CIRCUIT D'ALIMENTATION AVANT D'OUVRIR!
This device complies with Part 15 of the FCC Rules. Operation is subject to the following two conditions: (1) this device may not cause harmful interference, and (2) this device must accept any interference received, including interference that may cause undesired operation.

- Location: Located on one side of the backplane of the understage equipment, near the upper part of the backplane.
- Illustrate:
  - The weight is the weight of bare metal without packaging.
  - Barcode meaning: Product serial number.

2.4 Luckin Coffee APP

The use of the full function of LKMD-08 requires the installation of Luckin Coffee's dedicated APP, and the specific APP operation mode is determined by Luckin Coffee.

The Luckin Coffee APP inserts the USB disk through the USB interface on the left side of the device and copies the files from the USB flash drive for installation.

Debug 3

Chapter overview

This section describes **the** initial setup of the machine and how to modify the factory parameters.

3.1 Requirements to be met before commissioning

Before debugging the machine, it is necessary to read the content in [1.4 General Safety Instructions] and fully understand the safety risks of the equipment.

The machine weighs more than 25kg, and it is recommended that two people work together to open the package, carry it and lift it to a smooth surface that can withstand its weight.

On first use, your service organization runs the Dairy Dispenser and guides you through the operation

Before the service engineer sets up the LKMD-08, you need to do some preparations. The following preparations must be confirmed by a professionally qualified person:

1 . The power connection of the machine must be protected by a residual current device (RCD) or residual current circuit breaker (RCCB).

2. There must be a power switch to disconnect the main power cord of the machine.

3.2 Specific parameters/factory reset

The underlying parameters are set and modified by the manufacturer, if you want to modify

the parameters, please contact the manufacturer to update the SDK package.

Use 4

Chapter overview

This section describes the initial setup of the machine and how to modify the factory parameters.

Before using the machine, you must read the content in [1.4 General Safety Instructions] and fully understand the safety risks of the equipment.

4.1 Daily Use Instructions

Please use the machine in strict accordance with the following order, and the cleaning cycle for making drinks is detailed in [6.1 Cleaning Plan].

	Process	chapter
A.	Boot	[4.2] on page 20
B.	Supplemental items	[4.3] on page 2 1
C.	Confirm the machine status	[4.4] on page 24
D.	clean	[5] on page 29
AND.	Calibration (optional)	[6] on page 3 3
F.	Make drinks	[4.5] on page 25
G.	clean	[5] on page 29
H.	Shutdown	[4.6] on page 28

Perform the calibration process only when the device is powered on for the first time, when the ice has not been used for a long time, or when a device accuracy offset requires calibration, not each time.

For daily operations, there is no need to shut down the equipment, and it is recommended to perform shutdown operations if and only when it is not open tomorrow.

4.2 Boot

1. Use the power adapter component in the accessory to connect the device to power.
2. Turn on the switch on the side of the device to put it in the "I" state, and you can see the switch light up, and the screen lights up after a delay of a few seconds.

3. Click Luckin coffee APP from the screen to perform the configuration operation of the APP, the specific operation method is detailed in the Luckin Coffee APP operation manual.

Operate with caution when connecting the power cord to avoid sweat, water, etc. on your hands, otherwise it may lead to serious electrical safety risks!

4.3 Supplementary Materials

This section only describes the external operation, and the specific screen interaction method can be found in the Luckin Coffee APP operation manual.

In the event of any conflict between the contents of this chapter and the Luckin Coffee APP Operation Manual , the APP Operation Manual shall prevail.

4.3.1 Feeding in the condition of the milk box

s

1. Open the freezer door, wrench the check wrench, and pull out the silo horizontally, and stop when you feel the resistance.

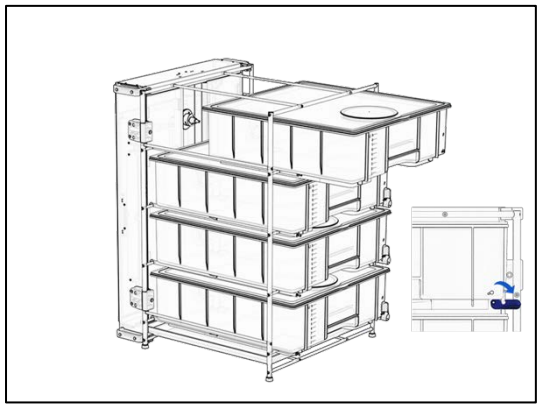

2. Remove the small lid, align the boxed dairy product with the quick feed opening, and pour it into the silo to replenish the material

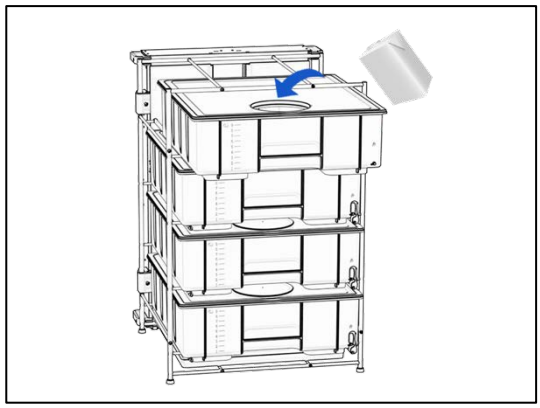

3. It is recommended that the maximum capacity of replenishment should not exceed 8L, that is, the position of the silo scale line 8L

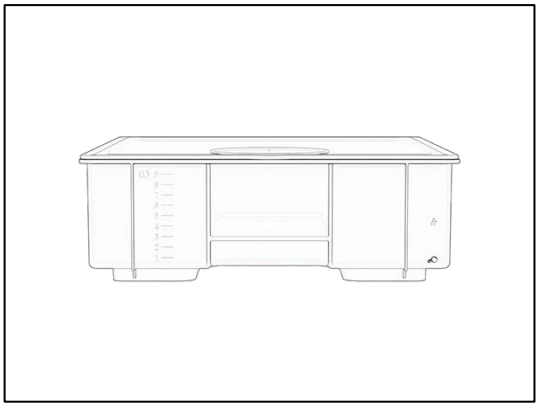

4. After pouring, cover the small lid, push the silo back into the equipment, and reset the check wrench. The feeding procedure is the same for other silos.

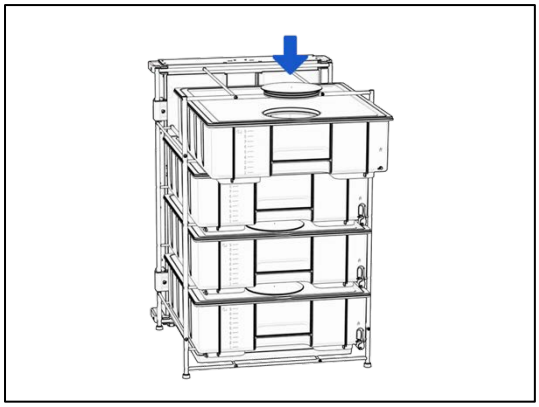

5. Click the screen pop-up window, select the replenishment capacity of the corresponding silo, click Confirm, and the material replenishment is completed

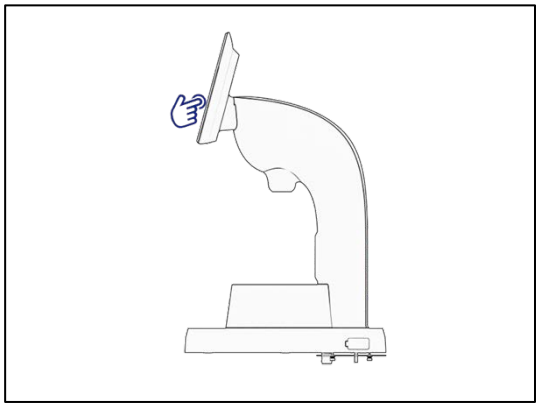

4.3.2 Feeding in the state of the milk pack

1. Open the freezer **door,** wrench the check wrench, pull out the silo horizontally, and gently lift the bin up after feeling the resistance, you can continue to pull out the bin.

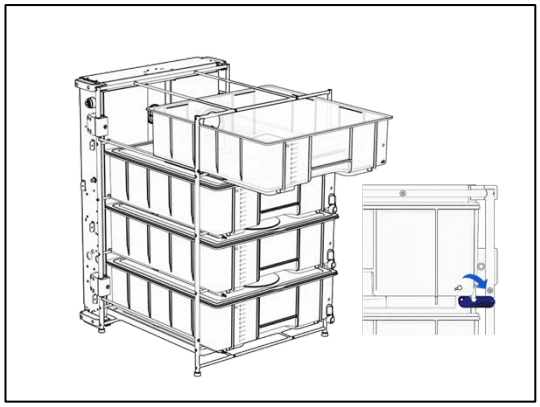

2. Remove the new milk bag and tear the pull tab

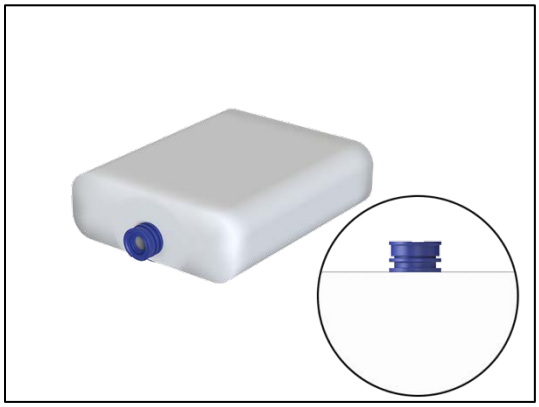

3. Snap the inside of the bag into the groove of the box.

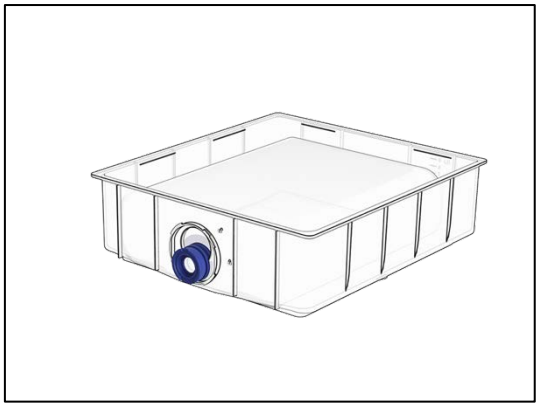

4. Push the container with the assembled milk bag into the machine, select the replenishment capacity of the corresponding silo on the screen, click Confirm, and the material is replenished

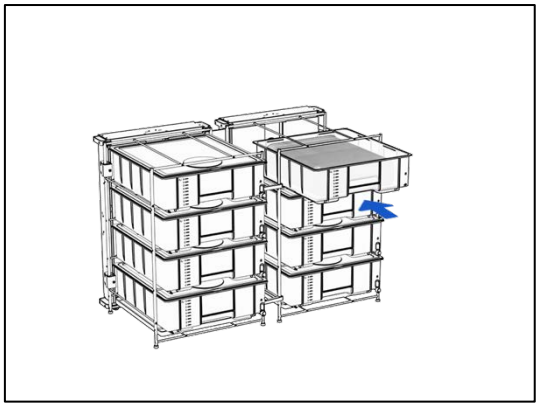

4.4 Confirm machine status

Before entering the operation state, confirm the status of the machine, which is an effective guarantee for normal operation.

Confirm the item	Correct state
Device alarm status	No alarm, including pumps, valves, silos, sensors, communication and other abnormal information
Equipment operational status	The main page silo is connected normally, and the materials are sufficient (see APP for details).
Cleaning reminders	No cleaning required
Maintenance reminders	No maintenance required
Internet	The connection is normal
Barcode scanner	The fill light lights up white normally

For the maintenance cycle of specific components, please refer to [7 Maintenance].

4.5 Making drinks

4.5.1 Use Listing Cup Listings

1./ After the customer places an order, the system prints the order label.

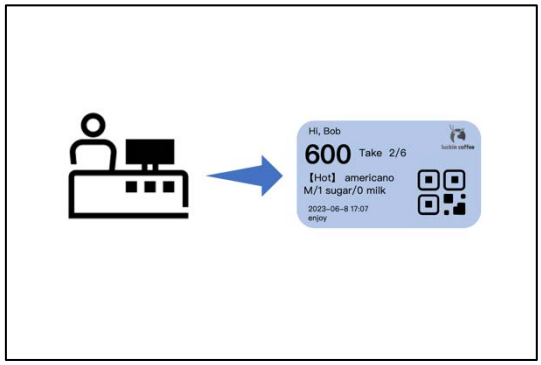

2./ Attach the order label to the cup

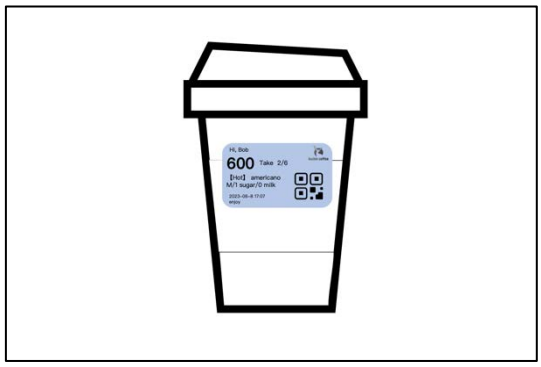

3./ **Put the cup into the cup holder, the label on the cup is facing the code scanner, the code scanner** will have a "drop" sound prompt if the code scanner is successfully scanned, and there will be a corresponding content prompt on the screen, and it will be **automatically produced** after delay

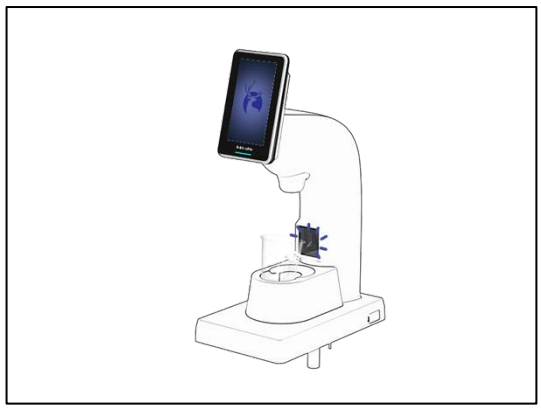

The dairy dispenser will automatically prepare according to the content of the order, and after the preparation is completed, there will be a corresponding content prompt on the screen

Follow the prompts to remove the cup and proceed to the next stage of production

4.5.2 Production using a milk tank

1./ After the customer places an order, the system prints the order label.

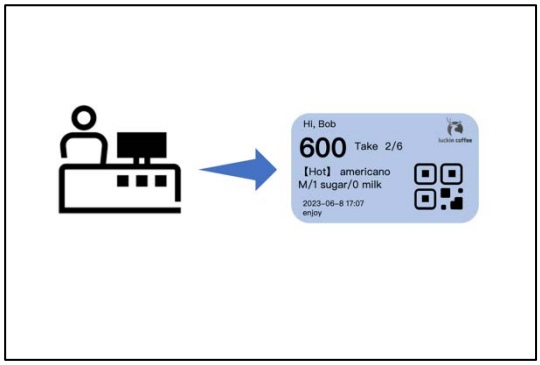

2./ Attach the order label to the cup (hot drink cup)

3./ Align the QR code on the hot drink cup with the code scanner of the dispenser, and after entering the order, the screen will **prompt you to place the milk tank** after the code is successfully scanned

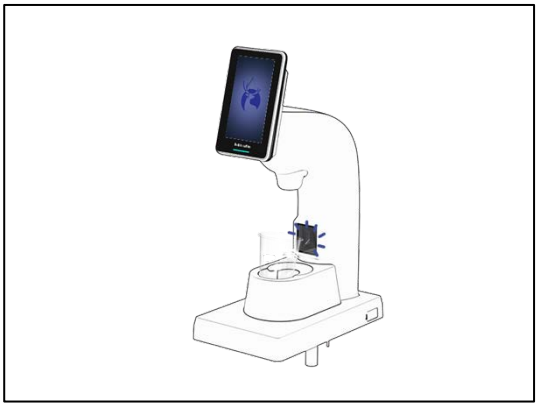

Place the **milk tank** in the designated position on the cup holder and **tap the screen to start the product**

The dairy dispenser will automatically prepare according to the content of the order, and after the preparation is completed, there will be a corresponding content prompt on the screen

Follow the prompts to remove the jar and proceed to the next stage of production

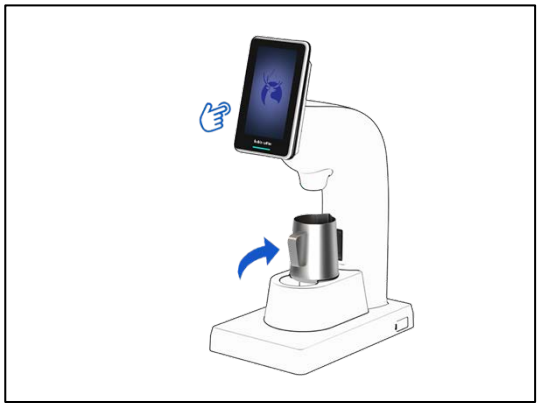

4.5.3 Use tall containers such as blenders/shakers

1./ After the customer places an order, the system prints the order label.

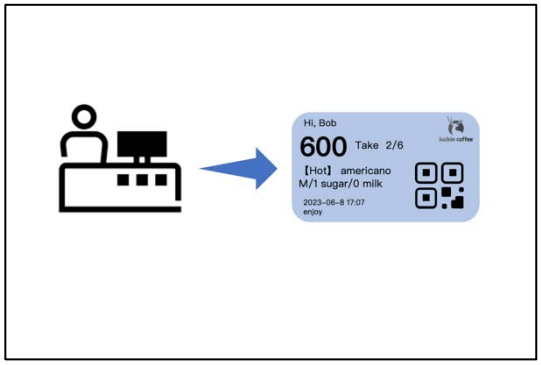

2./ Attach the order label to the cup

3./ Align the **QR code on the cup with the code** scanner of the dispenser, enter the order, and after the code is successfully scanned, the screen will **prompt to remove the cup holder and place the blender can**

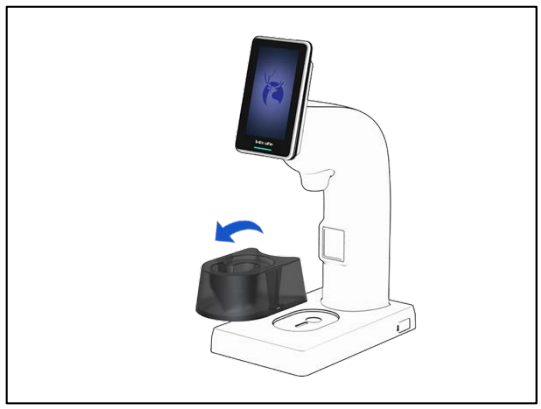

4./ Place the **tall container such as a blender jar** on the platform directly below the outlet and **tap the screen to start the product**

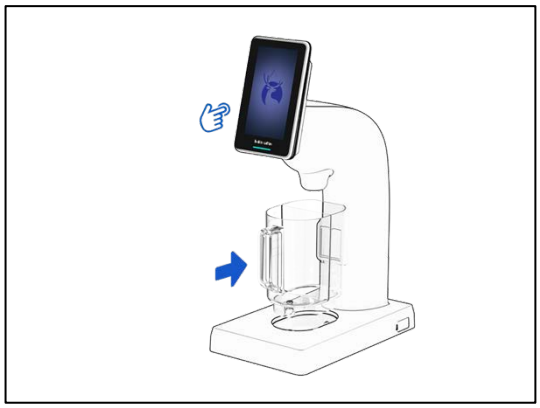

The dairy dispenser will automatically prepare according to the content of the order, and after the preparation is completed, there will be a corresponding content prompt on the screen

Follow the prompts to remove the container and proceed to the next stage of production

4.5.4 Using Screen Clicks to Select Products

When encountering an emergency and cannot use the QR code production, you can use the production function on the touch screen, and the specific interface operation method is detailed in the Luckin Coffee APP operation manual.

4.6 Shutdown

1./ There is no need to shut down the device for daily use, and the device is turned off if and only if it is closed and closed tomorrow.

2./ Turn off the switch on the side of the device so that it is put into the "0" state, at this time, you can see that the switch light is off, and the screen, indicator light, and code scanner fill light are off.

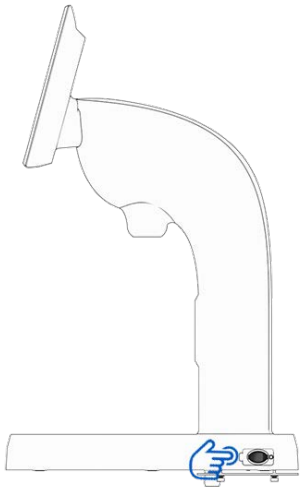

3./ Shutdown requires thorough cleaning of the device. For details, please refer to [5 Cleaning].

`

If the machine is not thoroughly cleaned before shutdown, turning the machine back on again at intervals of more than 72 hours can lead to serious food safety risks!

Cleaning 5

Chapter overview

This section describes how the machine is cleaned.

Before cleaning the machine, it is necessary to read the content in [1.4 General Safety Instructions] and fully understand the safety risks of the equipment.

When cleaning the device with detergent, handle it carefully and avoid it in the eyes!

Do not put any components of the LKMD-08 in the dishwasher

5.1 Cleaning Schedule

Dairy dispensers must be cleaned regularly to prevent clogging and ensure smooth operation. Dairy dispensers must keep their lines clean to ensure that people are not exposed to health hazards from food made from LKMD-08.

The machine records all automatic cleaning actions. (Check out in the Luckin Coffee app).

Cleaning operations	**Recommended cleaning cycle**
Clean production pipeline	Automatic cleaning every 1to 5 minutes
Clean the surface of the device	1 time per day
Equipment material pipeline cleaning	1 time per day After 4 to8 hours of non-use, it needs to be washed and left to prevent pipeline blockage caused by dairy coagulation

5.2 Cleaning Operations

This section only describes the external operation, and the specific screen interaction method can be found in the Luckin Coffee APP operation manual.

In the event of any conflict between the contents of this chapter and the Luckin Coffee APP Operation Manual , the APP Operation Manual shall prevail.

5.2.1 Pipeline cleaning

➢/ **Automatic Wetting:**

The equipment has an automatic wetting function, and a section of clean water will automatically fall from the outlet after every 1 to 5 minutes to flush the product pipeline.

➢/ **Manual wetting:**

The device supports manual wetting function, click the wetting button on the main interface of the screen, and run the wetting function after confirmation.

➢/ **Scheduled cleaning:**

The equipment supports the function of regular **cleaning, automatic** wetting every three times, automatic implementation of regular cleaning, a section of clean water will be dropped at the outlet to flush the product pipeline.

When wetting and regular cleaning, clean water will fall directly to the water tray, and do not place any containers or objects on the platform or cup holder during this time to avoid liquid splashes

5.2.2 Surface cleaning of the equipment

Use a clean, soft rag to thoroughly wipe down the machine surface, including the top, front and sides, to keep the machine surface clean.

5.2.3 Equipment material pipeline cleaning

This module only describes the operation related to external devices, detailed operation steps, and the APP has clear guidance and demonstration.
In the event of any conflict between this module and the Luckin Coffee APP Operation Manual , the APP Operation Manual shall prevail.

---

5 clean

1./ Press and hold the wetting button on the screen to enter the daily cleaning mode and follow the on-screen prompts to perform a series of operations

2./ Open the freezer door, wrench the check wrench, and pull out all the silos **in turn**

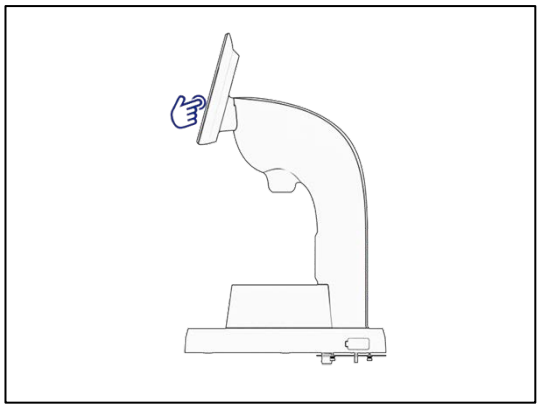

3./ Use the cleaning **cap,** assemble it at each material joint in turn, rotate and lock, and install it in place until the wrench position of all the cleaning caps is horizontal
The APP will also provide instant feedback on the connection of the cleaning cap

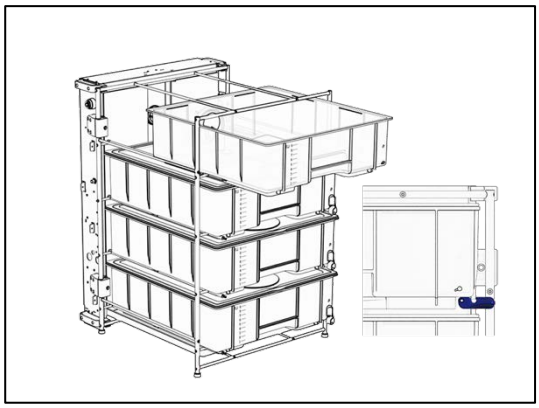

4./ Close the refrigerator door and follow the on-screen instructions for further cleaning

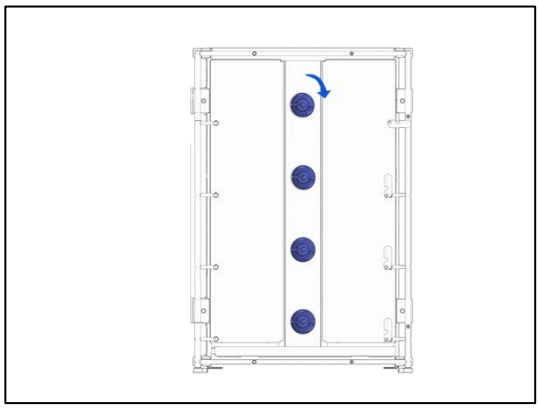

5./ When prompted, remove the cup holder and drain tray from the upper part of the countertop

6./ The cleaning liquid tank is filled with the specified volume of cleaning liquid, and the box with the cleaning liquid is assembled on the table, and the cleaning box valve seat is connected to the joint in the sink

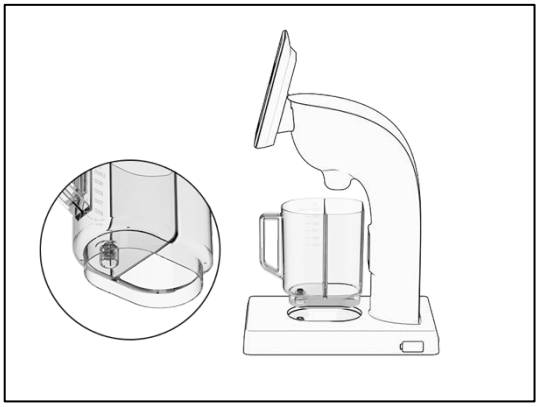

7./ After the cleaning box is installed in place, click the screen to confirm that the equipment starts to automatically clean the material pipeline
During automatic cleaning of the equipment, users can clean the silo, cup holder, drainage tray and other parts that come into contact with the material according to the cleaning rules

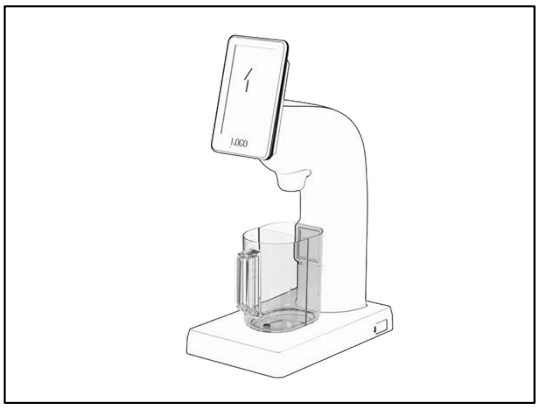

8./ After cleaning, according to the screen APP prompt, the equipment is reset, and the cleaning is completed

For more details, please refer to the cleaning method described in the Luck in Coffee APP operation manual.

Calibrate 6

Chapter overview

This section describes the initial setup of the machine and how to modify the factory parameters.

Before calibrating the machine, it is necessary to read the contents of [1.4 General Safety Instructions] and fully understand the safety risks of the equipment.

The machine needs to be calibrated regularly to ensure stable production accuracy, and it is recommended to perform accuracy calibration at least once every 3 months.
If the output quantity is not accurate during the operation of the store, the whole machine or individual channels can be calibrated at any time

---

6.1 Factory calibration/defaults

➢/ Calibration principle

The device writes default values before it leaves the factory.

The default value is a factory reference value, and after the device is written to the default value, after long transportation, severe bumps and jitter, the accuracy of the equipment may change and it will need to be recalibrated with purified water.

When the calibration value of the device is discarded, the default value is restored.

➢/ Calibration steps

Before performing the calibration operation, the pipeline needs to be cleaned to ensure that the pipeline is clean and free of material residue. For details, please refer to [5 Cleaning].

Before performing the calibration operation, ensure that the water pressure of the equipment is stable.

This section only describes the external operation, and the specific screen interaction method can be found in the Luckin Coffee APP operation manual.

1./ Prepare an electronic scale and a standard cup (empty cup) and click peel (remove the weight of the cup).
Click APP to enter the calibration page and put in the empty cup according to the prompts.

2./ Click the calibration button and drop a quantitative amount of water into the cup

3./ Put the cup containing water on the electronic scale to weigh, and after the electronic scale number is stable, read the electronic scale value.

4./ Enter this value into the APP and click Confirm to complete the first calibration

5./ Follow the APP prompts and repeat steps 1-4 until the entire process is completed and the calibration is completed

You can choose to calibrate the entire device or individual piping modules.

Maintenance 7

Chapter overview

This section describes how the machine is cared for.

Before maintaining the machine, it is necessary to read the content in [1.4 General Safety Instructions] and fully understand the safety risks of the equipment.

Non-professionals are prohibited from disassembling the machine! Failure to do so can lead to serious electrical safety risks!

7.1 Maintenance intervals

- Equipment needs to be maintained regularly to ensure that the food contact performance and electrical safety performance of the equipment are maintained at normal levels.
- When the maintenance period is approaching, the equipment will be alerted or the maintenance log can be actively consulted.
- Maintenance will check and replace aging internal piping and components, and perform some thorough cleaning (including daily disassembly cleaning), maintenance and calibration operations.
- Proper maintenance will extend the service life of the equipment and reduce the additional costs and losses caused by damage caused by reaching the service life, which requires the replacement of the equipment.

➢/ **The main component life of LKMD-08 is as follows:**

parts	Design for service life
Silo silicone valve	A single silo has accumulated 100 0 insertions Or replace when severely discolored, damaged
Gear pump motor	10000 hours, or replacement if damaged
flowmeter	10000 hours, or replacement if damaged
Solenoid valve	10000 00 times, or replace if damaged
sensor	300,000 times, or replace if damaged
touch screen	5 years, or replace if damaged
Barcode scanner	5 years, or replace if damaged
Silicone tubing	1 year, or replace if severe discoloration or damage
Teflon tubes	1 year, or replace if severe discoloration or damage

Note: There are differences between the components of the milk carton scheme and the milk bag solution, and the actual situation shall prevail.

For a detailed list of wear parts and maintenance parts, please consult the manufacturer and see the contact details on the front page.

7.2 Maintenance Content

Please contact the device manufacturer for maintenance and should only be carried out professionally by the equipment manufacturer or the manufacturer's designated organization.

Maintenance should be carried out at the equipment manufacturer's premises or in a special equipment workshop, and is prohibited in the business store.

➢ **The maintenance procedure of LKMD-08 is as follows:**

	Process	illustrate
A.	Clean the device thoroughly	/
B.	Disassemble the machine and clean the inside of the device	/
C.	Check aging component and device operating logs	Life of food contact parts The life of electrical components Wear and failure of mechanical components Equipment performance check
D.	Replace near-life, damaged components	/
AND.	Other maintenance operations	/
AND.	Calibrate the machine	Calibration accuracy Update the maintenance log
F.	Clean the device thoroughly	/

Note: Maintenance procedures may be adjusted based on actual usage of Luckin.

For detailed maintenance operations, training and authorization, please consult the manufacturer and see contact details on the title page.

Troubleshooting 8

Chapter overview

This section describes the machine's user interface warning messages, lists possible faults and how to troubleshoot them.

Before using the machine, you must read the content in [1.4 General Safety Instructions] and fully understand the safety risks of the equipment.

This chapter lists possible daily operation failures: serious failures, faults that need to check electrical connections in corrective actions, faults involving food safety, please contact maintenance personnel to deal with them!

Before performing any troubleshooting on the LKMD-08, it is essential to read and understand the contents of this manual. If you have any doubts, please consult the device manufacturer or your local service agency.

8.1 Examples of error messages (courtesy of Luckin).

Here is the error message prompt page of the Luckin Coffee APP, and additional instructions on how to operate the page in such a situation.

8.2 List of faults

➢ Structural failure

- Structural faults are not displayed on the screen, there is no other active form of feedback, and need to be actively viewed and checked, encountered and observed during daily use and maintenance.

- Possible structural failures of LKMD-08 are as follows:

#	Description of the problem	Corrective actions
1	The equipment on the stage is shaking	1. Check whether the fasteners of the equipment on the bench are loose
2	The production volume is abnormal	1. Check that the item is sufficient 2. Check whether the silicone tubing is leaking or poorly plugged 3. For calibration accuracy, see [6 Calibration]. 4. None of the above steps can be solved, please call the maintenance personnel
3	The liquid in the cleaning box cannot be absorbed	1. Check the tubing for air leakage or poor insertion 2. Check that the cleaning fluid valve or plug is not blocked 3. None of the above steps can be solved, please call the maintenance personnel
4	There is a leak inside the device	1. Check each connector for damage, especially those near the leak location. 2. Check the aging of the pipes. 3. Check the line for broken or strong compression. 4. Check whether the lines and outlet are blocked. 5. None of the above steps can be solved, please call the maintenance personnel

8 Troubleshooting

➢ Software and electrical failures

- Software and electrical faults can be displayed on the screen or other interactive means, and the following table can be consulted for corrective action in the event of an alarm.

- Possible software and electrical failures of LKMD-08 are as follows:

#	Description of the problem	Corrective actions
1	The silo opening could not be sensed and closed status	1. Inspect the sensor and its wiring for damage.
2	Abnormal detection of cleaning solution concentration	1. Check that the concentration of the cleaning solution is compliant
3	The indicator does not light up	2. Check the LEDs and their lines for faults. 3. Check for power-up.
4	The flow meter falsely reported null/ The item is not reported when it is empty	1. Check that the item is empty. 2. Check that the water is turned on 3. Check the lines for air leakage or damage 4. Material calculation error, silo weighing and re-entering the rest data.
5	The scanner light does not light up	1. Check that the device is powered on 2. Check whether the power supply of the code scanner is normal 3. Check whether the scanner configuration is normal. 4. Check the scanner for damage.
6	The code scanner does not flash or beep after scanning the code	1. Check whether the scanner configuration is normal. 2. Restart the device.
7	Cleaning is required	1. To perform cleaning operations, see 5 Cleaning.
8	Maintenance required	1. Call service.
9	The temperature sensor fails	1. Call service.
10	Communication failure	1. Check network connectivity. 2. Call service.
11	Network connection failed	1. Check the network cable connection. 2. Check the network settings.
12	The screen flickers or touches incorrectly	1. Check whether there are strong electric fields and strong magnetic field interference sources around

		the equipment. 2./ It is up to an electrician to check whether the ground wire of the equipment is properly connected, and false ground wire can also cause this problem. 3./ Call service.
13	The app needs to be updated	1./ Follow the Luckin Coffee APP operation manual or use a USB flash drive to update the APP through the USB port on the left side of the device.
14	The code scanning function is not available	1./ Temporarily use the screen selection function. 2./ Call the service or IT department.
15	There is static electricity on the surface of the device	1./ It is up to an electrician to check that the ground wire is well connected, and false ground wires can also cause this problem.
16	The leakage protector tripped	1./ It is up to an electrician to check that the ground wire is properly connected, and false ground wires can also cause this problem. 2./ Call service.

Store operators are prohibited from disassembling equipment, and line maintenance needs to be carried out by professionals, otherwise there is a serious risk of personal and equipment injury!

After the failure, if the self-eliminated fault occurs again or multiple times, it is recommended to call the maintenance personnel for maintenance or obtain training content.

The content of this section is for reference only, and in the event of a failure, the actual guidance of maintenance personnel shall prevail.

The content of this section is for reference only, and in the event of inconsistency with the steps described in the Luckin Coffee APP Operation Manual , the on-screen page guidance described in the APP Operation Manual shall prevail.

8.3 Frequently Asked Questions

➢/ No material is discharged

- ■/ Check the screen alarm information.
- ■/ Check that the silo is empty.
- ■/ Restart your device to see if things improve.
- ■/ If none of the above works, call your service personnel.

➢/ The code scanning function fails

- ■/ Check whether the QR code is aligned with the scanner when scanning the code.
- ■/ Call the maintenance personnel to check if the device has a hardware failure
- ■/ Call the maintenance personnel to check whether the code scanner configuration is normal.
- ■/ Call the maintenance personnel to check if the equipment needs to be adjusted to obtain more suitable light conditions.

➢/ What should I do if I don't use the device for a long time?

- ■/ The device should be thoroughly cleaned and all cleaning operations performed.
- ■/ Allow the tubing to be fully emptied to reduce the residual moisture in it.
- ■/ Empty all materials inside the equipment and apply masking tape (without leaving glue) on the edge of the equipment silo to prevent the silo from opening itself during handling.
- ■/ Put the device back in its original packaging and seal it in a cool, dry place.

➢/ What should I do if I re-enable a device that I have not used for a long time?

- ■/ Clean the equipment thoroughly, perform all cleaning operations and pay attention to any deterioration or odor in the lines.
- ■/ In the absence of deterioration, peculiar smell, etc., and the equipment is in a good clean state, it can be operated according to the new equipment use process. For details, please refer to [4.1 Daily Use Guide].

If the common problem occurs multiple times, even if you can eliminate it yourself, it is still recommended to call the maintenance personnel to repair or obtain training content.

Option 9

Chapter overview

This chapter describes the options for the LKMD-08.

The device only supports the use of specified accessories, and the use of unauthorized other accessories may result in damage to the device or a safety risk!

9.1 Universal Options

category	The name of the offer	Purpose remarks
Milk carton solutions	Silicone valve for milk cartons	/
	Milk carton components	/
Milk bag scheme	Silos	/
	BIB bags	/

9.2 List of wearing parts

A detailed list of wearing parts can be found in the Maintenance Manual.

It is recommended that chain operators carry out spare parts for wearing parts, and the number of spare parts is determined according to the amount of equipment purchased and the distribution of stores in a certain area to ensure that in the event of equipment failure, it can be replaced and repaired in the fastest time to minimize the impact on store operations.

9.3 General Accessories

category	The name of the offer	Purpose remarks
Electrical parts	PCB main control board	/
	Android control pad	/
	Material module board	/
	flowmeter	/
	Solenoid valve	/
	Gear pumps	/
	Barcode scanner	/
	touch screen	/
	Power adapter	/
	Inlet pressure reducing valve	/
	Micro switch	/
	Level sensors	/
	Concentration sensor	/
Structural parts	Silicone valve	/
	Wash the cap	/
	Material lines	/
	Milk crates and their fitting components	/

To obtain and replace options, contact the device manufacturer for a quote.

Packaging & Shipping 10

Chapter overview

This chapter describes the packaging and warehousing and shipping information of the LKMD-08.

Equipment turnover and installation is a professional operation, which needs to be carried out by the equipment manufacturer or the designated service organization, assigned by professionals!

/

10 Packaging & Shipping

10.1 Packing List

serial number	description	quantity
1	LKMD-08 on-board mainframe	1
2	LKMD-08 under-set host	1
3	Dairy material box (with lid and connector assembly)	8
4	Silicone valve	10
5	Clean the connector cap	10
6	Sink under the counter	2
7	Wash the liquid cartridge on the countertop	1
8	Cup holder on stage	1
9	Drain tray on the countertop	1
10	Power adapter	1
11	Material lines	4
12	Downpipe (with interface hoop).	1
13	Pipeline storage box (with silicone plug).	1
14	Inlet pressure reducing valve	1
15	Fasteners for on-deck equipment	1
16	Product certificate	1
17	Product Manual	1

This section is for a general description of the configuration only, subject to physical use, and you can contact your sales person for support if you have any questions, and you may not make any claim against the manufacturer on this basis.

10.2 Warehousing & transportation

For environmental requirements during equipment storage and transportation, please refer to [2.3.4 Environmental Conditions].

For specific operation steps of warehousing and transportation, please refer to the "Equipment Installation Guide" manual.

Only use the original packaging of the device for shipping and turnaround, otherwise it may result in damage to the device!

Thoroughly clean the equipment before shipping! For details, please refer to [5 Cleaning].

10.3 Installation

➢/ **Please follow the Device Installation Guide manual for the following information:**

Equipment installation requirements for water, electricity and space.

The requirements of the operation department for the installation location of the equipment in the store.

Get step-by-step instructions for device installation.

Get specific considerations for device installation.

Contact the manufacturer (see front page) for the Equipment Installation Guide manual and related ıllation training.

Warranty 11

Chapter overview

This chapter describes warranty limits and the definition of personnel terms regarding the machine.

11.1 Warranty Limitations

MEGAROBO® assumes no liability for:

- Improper use of dairy dispensers.
- Unauthorized modification (voluntary or involuntary).
- Failure to comply with the actions indicated in the product manual.
- Failure to follow the safety instructions in the manual.
- Damage to equipment or personal injury caused by non-professionals performing operations that can only be performed by professionals.
- Losses resulting from the use of the machine, in particular any loss of data or any financial loss that may be associated with the use of the Software.
- If the dairy dispenser is not used, repaired, maintained, transported or stored in the manner specified by the manufacturer, the **protection provided by** the dairy dispenser may be affected.

Any warranty will be considered void if: installation of the machine by unauthorized persons; The installation does not comply with our configuration table; damage caused by misuse; repairs or maintenance by unauthorized persons; failure to comply with mandatory cleaning procedures; use the machine contrary to the instructions given in this manual; Refer to irreversible errors or damages caused by information other than those provided by the manufacturer.

Each LK **M** D-08 **is inspected** by MegaRobo® before shipment.

11. 2 Glossary

This section describes the terminology **used** in this manual.

1 1.2.1 Personnel

manufacturer

See the "Manufacturer" information on the title page.

user

"User" means the end user who uses the Dairy Dispenser to make the Dairy Products.

operator

"Operator" means the operator of the LKMD-08, responsible for routine beverage preparation and daily cleaning.

personnel

"Personnel" includes persons who perform any activity on LKMD-08 and who meet the manufacturer's requirements and are therefore authorized as a result.

administrator

"Administrator" means a person who is properly trained to perform specific tasks on LKMD-08.

Maintenance Engineer

"Service Engineer" means a properly trained person who is approved to install, maintain and repair LKMD-08.

Service Organizations

"Service Provider" means an organization authorized to appoint a Service Engineer, and you can contact the Service Provider for everything from maintenance to user training.

MegaRobo Technologies Co., Ltd

No. 277, Dongping Street,
Suzhou Industrial Park, Suzhou
Jiangsu Province, China
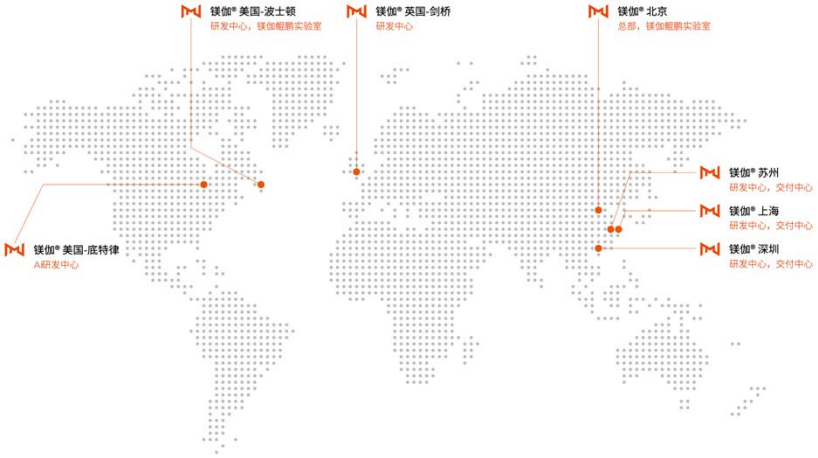
400 0601 017
OFFICIALMAIL@MEGAROBO.TECH
https://www.megarobo.tech