SR03KWL-SG1-US

User Manual

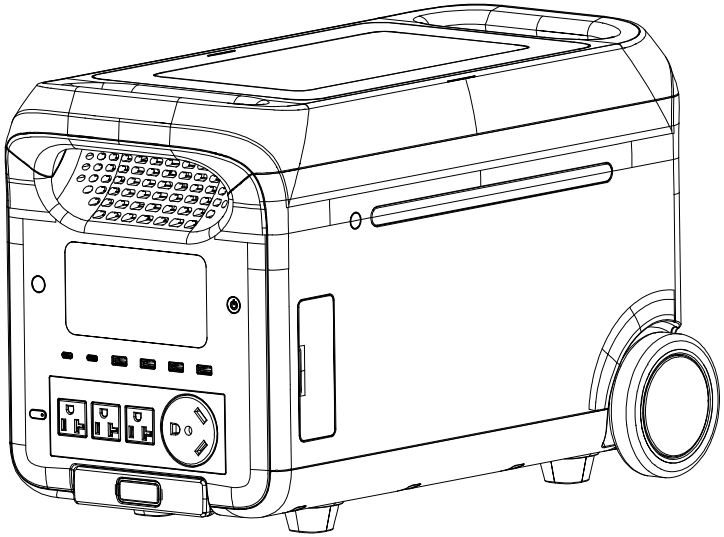

Content

1. SR03KWL-SG1-US parameters 1

2. Safety guidelines

2.1 Use 2

2.2 Discard 2

3. Guideline for users

3.1 Product overview 3

3.2 LCD screen 5

3.3 Use 5

3.4 AC charging 7

3.5 PV charging 8

3.6 Car charging 8

3.7 Battery expansion 9

3.8 APP 11

3.9 UPS function 11

4. FAQs (Frequently Asked Questions) 12

5. Error messages & solutions 13

6. What' s in the box 15

7. Maintenance 15

1. SR03KWL-SG1-US parameters

General

Net weight	≈34kg
Dimension	536*303*343mm
Capacity	2560Wh, 51.2V
Wi-Fi	supported

Output

AC output (x4)	AC output (x3): 100-120V~ (50/60Hz), 20A 2400W AC output (x1): 100-120V~ (50/60Hz), 25A 3000W AC output (bypass mode): 100-120V~ (50/60Hz) 15A 1800W
Maximum load	3000W, bypass mode：1800W
USB-A (x2)	5V⎓ 2.4A (constant voltage),12W Max./output
USB-A quick charge (x2)	5V⎓3A 9V⎓2A 12V⎓1.5A (constant voltage), 18W Max./output
USB-C (x2)	5/9/12/15V⎓ 3A 20V⎓5A (constant voltage),100W Max./output
Car charger	12.6V⎓10A, 126W Max.
DC5521 output (x2)	12.6V⎓3A

* Car charge and DC5521 share power, 126W Max.

Input

AC input power	1800W Max., 15A
AC input voltage	100-120V~ 50Hz/60Hz
PV charge	13-45V⎓12A, 800W Max.
Car charging input	12V/24V battery supported, 8A by default

Battery

Cell Type	lithium iron phosphate battery ($LiFePO_4$)
Life cycle	remaining capacity still over 80% after 3,600 cycles
Protection type	over temperature protection, low temperature protection, over discharge protection, over charge protection, over load protection, short circuit protection, over current protection

Operating temperature

Optimal operating temperature	20~30°C
Discharge ambient temperature	-20~45°C
Charge ambient temperature	0~45°C
Storage ambient temperature	-20~45°C (20~30°C preferred)

*Whether the product can be charged or discharged is subject to the actual battery pack temperature.

Others

Battery Expansion	2560Wh, support 6 expansion battery packs at most, separate selling.

2. Safety guidelines

2.1 Utilisation

1. Ne laissez pas un SR03KWL-SG1-US fonctionnel être proche de la source de chaleur, comme le feu ou le chauffage.
2. N' entrez pas en contact SR03KWL-SG1-US avec un liquide.
3. N' utilisez pas SR03KWL-SG1-US dans un environnement électrostatique ou à fort champ magnétique.
4. Ne démontez pas le SR03KWL-SG1-US de quelque manière que ce soit et ne le percez pas avec un objet tranchant.
5. Ne court-circuitez pas le SR03KWL-SG1-US avec un fil ou d'autres objets métalliques.
6. N'utilisez pas de pièces ou d'accessoires d'origine. Pour le remplacement de pièces ou d'accessoires, veuillez visiter le canal de vente officiel pour obtenir des informations sur l'achat.
7. Lorsque vous utilisez SR03KWL-SG1-US , veuillez suivre strictement la température de fonctionnement définie dans ce manuel d' utilisation. Si la température est trop élevée, la batterie peut prendre feu ou même exploser. Si la température est trop basse, les performances du SR03KWL-SG1-US seront sérieusement compromises, même une utilisation normale sera affectée.
8. N' empilez pas d' objets lourds sur SR03KWL-SG1-US .
9. N'arrêtez pas le ventilateur de force et n'exposez pas le SR03KWL-SG1-US dans un environnement non ventilé ou poussiéreux lorsqu'il fonctionne.
10. Veuillez éviter les collisions, les chutes et les vibrations violentes. En cas d' impact grave, coupez immédiatement l' alimentation. Veuillez fixer fermement le SR03KWL-SG1-US pendant le transport pour éviter les vibrations et les chocs.
11. Si le SR03KWL-SG1-US tombe accidentellement dans l' eau, placez-le dans un endroit sûr et large et éloignez-vous jusqu' à ce qu' il soit sec. Le produit séché ne doit pas être réutilisé. Éliminez-le correctement conformément au chapitre 2.2 du présent manuel d' utilisation. Si le SR03KWL-SG1-US est en feu, veuillez utiliser l' équipement d' extinction d' incendie dans l' ordre recommandé : eau ou brouillard d' eau, sable, couverture anti-feu, poudre sèche, extincteur au dioxyde de carbone.
12. S' il y a de la saleté, utilisez un chiffon sec pour l' essuyer.
13. Placez le SR03KWL-SG1-US avec précaution pour éviter tout dommage. Si le SR03KWL-SG1-US est renversé et gravement endommagé, éteignez immédiatement le SR03KWL-SG1-US et placez la batterie dans un endroit spacieux et gardez-la à l' écart des matériaux et des personnes inflammables, et mettez-la au rebut conformément aux exigences des lois et réglementations locales.
14. Gardez SR03KWL-SG1-US hors de la portée des enfants et des animaux domestiques.
15. Conservez le SR03KWL-SG1-US dans un endroit sec et ventilé.
16. En milieu humide (bord de mer, eau, etc.), il est recommandé d' équiper le SR03KWL-SG1-US d' un sac résistant à l' humidité. Si de l' eau est trouvée à l' intérieur du produit, ne pas l' utiliser/recommencer. Veuillez prendre des contre-mesures pour éviter les chocs électriques avant de toucher SR03KWL-SG1-US . Placez-le dans un espace ouvert sûr et étanche et contactez immédiatement le service client.
17. Il n' est pas recommandé d' utiliser SR03KWL-SG1-US pour alimenter l' équipement médical d' urgence lié à la sécurité, y compris, mais sans s' y limiter, l' appareil respiratoire de qualité médicale (version hospitalière CPAP: Continuous Positive Airway Pressure), le poumon artificiel (ECMO, Extracorporeal Membrane Oxygenation). Il peut être utilisé pour alimenter la version domestique CPAP à domicile et ne nécessite pas de surveillance professionnelle continue. Veuillez suivre les conseils de votre médecin et consulter le fabricant pour toute restriction sur l' utilisation de l' appareil. Pour l' équipement médical général, veuillez faire attention à l' état de puissance pour vous assurer que le courant ne s' épuise pas.
18. Les alimentations génèrent inévitablement des champs électromagnétiques lors de son utilisation, ce qui pourrait affecter le dispositif médical implantable ou le fonctionnement normal du dispositif médical personnel, tels que les stimulateurs cardiaques, les implants cochléaires, Les appareils auditifs, les défibrillateurs, etc. Si l' un de ces dispositifs médicaux est utilisé, veuillez consulter le fabricant pour connaître les restrictions d' utilisation afin de vous assurer que le SR03KWL-SG1-US est utilisé à une distance sécuritaire des dispositifs médicaux implantés tels que les stimulateurs cardiaques, les implants cochléaires, le sida auditif, les défibrillateurs, etc.
19. Lorsque la centrale électrique est connectée à un réfrigérateur, elle peut s'arrêter automatiquement en raison de la propriété de fluctuation de puissance du réfrigérateur. Lors de la connexion de l' alimentation à un réfrigérateur qui stocke des médicaments, des vaccins ou d' autres objets de valeur, il est recommandé de régler la sortie AC sur « Jamais éteint » dans l' APP, afin d' assurer une alimentation continue. Les utilisateurs doivent faire attention à la consommation d' énergie.

2.2 Jeter

1. Si les conditions le permettent, assurez-vous de décharger complètement la batterie, puis placez le SR03KWL-SG1-US dans le bac de recyclage de la batterie spécifié. SR03KWL-SG1-US contient des batteries, qui sont dangereuses. Il est strictement interdit de les jeter dans les poubelles ordinaires. Pour plus de détails, suivez les lois et réglementations locales sur le recyclage et l' élimination des piles.
2. Si la batterie ne peut pas être complètement déchargée en raison d' une défaillance du produit, ne jetez pas la batterie directement dans le bac de recyclage de la batterie. Contactez une entreprise professionnelle de recyclage de piles pour une élimination plus poussée.
3. La batterie ne démarre pas après une décharge excessive. Veuillez vous en débarrasser tel qu' il a été jeté.

3. Guideline for users

3.1 Product overview

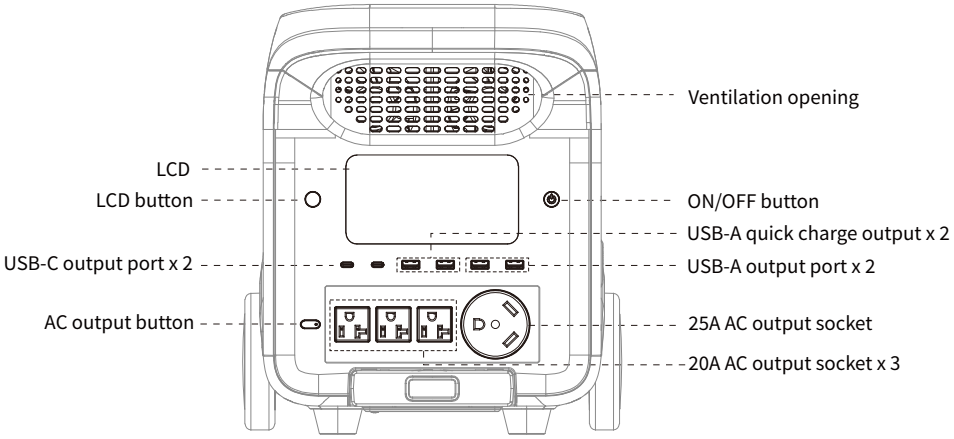

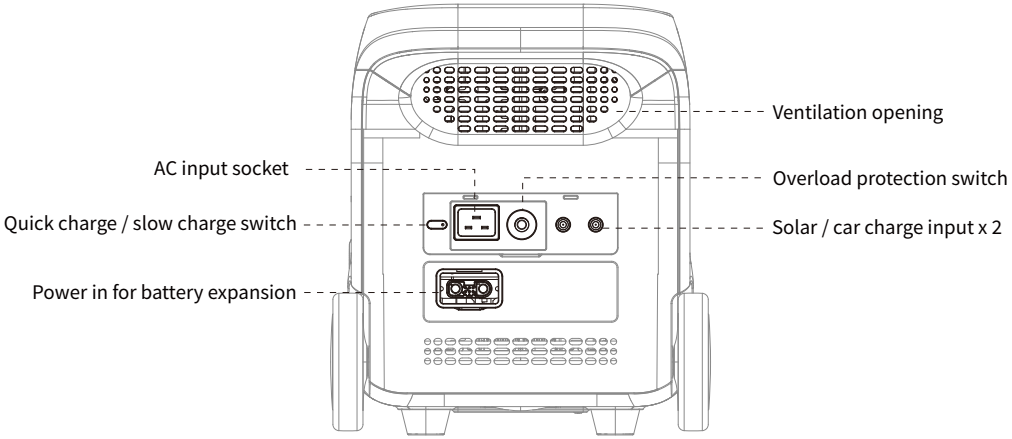

3. Guideline for users

3.1 Product overview

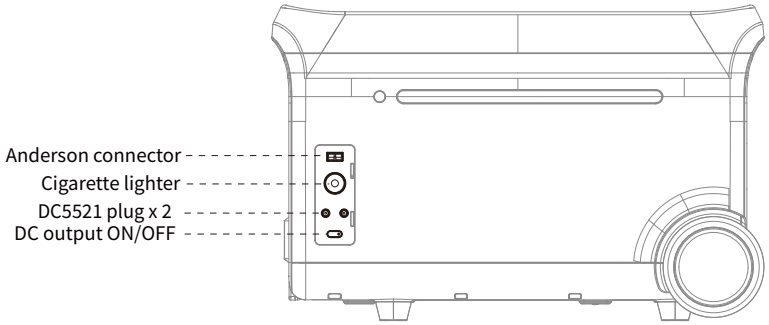

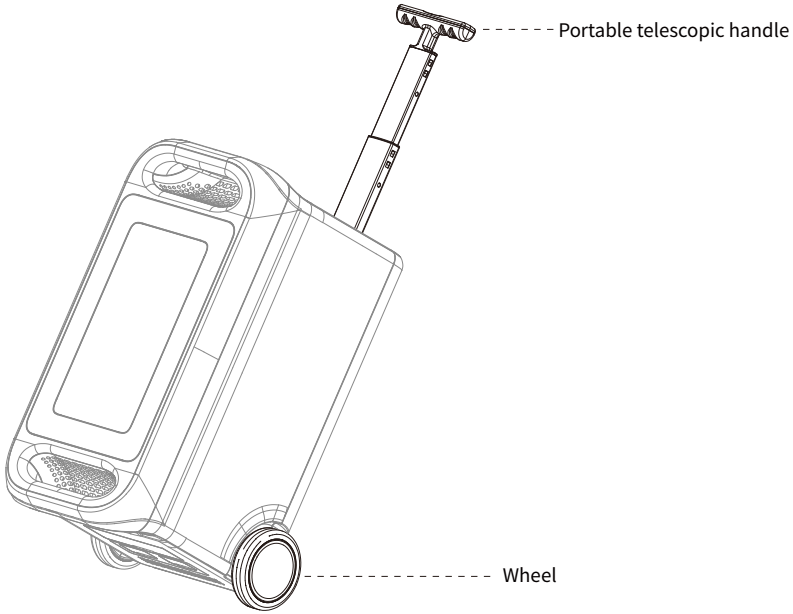

3.2 LCD screen

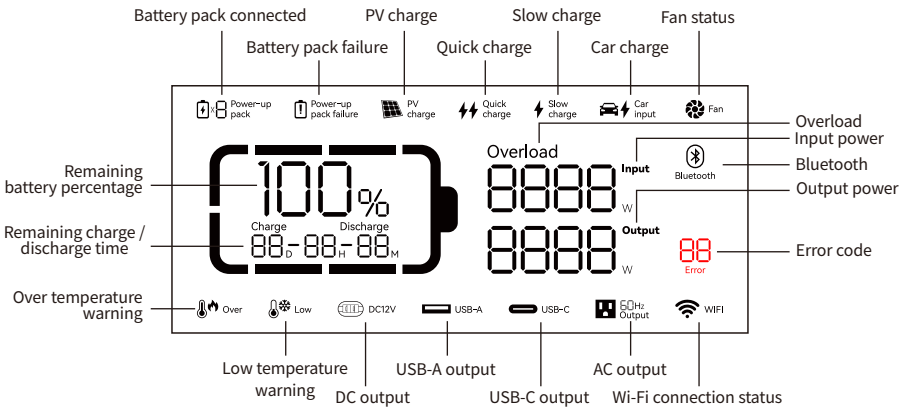

Battery capacity: When SR03KWL-SG1-US is being charged, SOC icon will flicker.
Wi-Fi connection status: The flickering icon indicates that SR03KWL-SG1-US is ready for pairing. The icon will keep flickering if a mobile phone and SR03KWL-SG1-US are connected by hotspot. After network connection succeeds, the icon will always be on. If connection fails, the icon will be off.
* Please refer to clause 5 for more details regarding error message.

3.3 Use

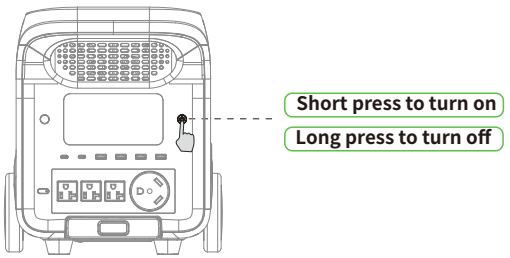

On and off

- Press the main power switch to turn on the device, then the screen will be lit and the main power indicator will enter the breathing light mode.
- If no operation is performed to SR03KWL-SG1-US for 5 minutes, SR03KWL-SG1-US will enter hibernation state and the LCD will automatically turn off. When there is load change or operation to SR03KWL-SG1-US, the LCD screen will be automatically lit. Press the main power switch to turn on or turn off the LCD.
- Press and hold the main power switch will turn off SR03KWL-SG1-US.
- The default standby time is 2 hours. If other output power switches are not turned on and not any loads are connected, SR03KWL-SG1-US will automatically shut down after 2 hours. Standby time can be set on the APP.

3.3 Use

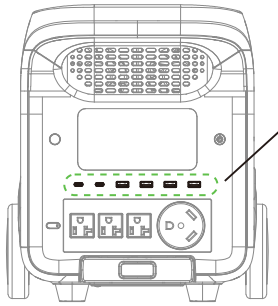

USB output

- USB output is enabled by default after the main power switch is turned on.

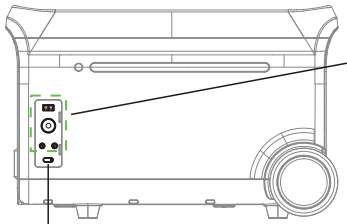

12V DC output

- After the main power switch is turned on, press the 12V DC output power switch to enable the DC output port.
- Press the 12V DC output power switch again to turn it off.
- When the 12V DC output power switch is turned on, SR03KWL-SG1-US does not shut down automatically.

Short press 12V DC output power switch

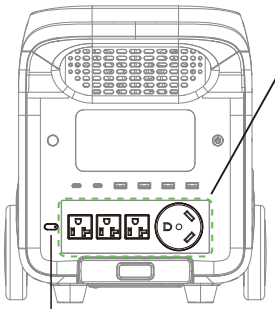

AC output

- After the main power is on, press the AC output power switch to enable the AC output port. Press the AC output power switch again to turn it off.
- The default standby time of the AC output is 1 hour. After 1 hour without any loads, the AC output power switch will be automatically off.
- When the AC output is not in use, turn it off to save power consumption.

Short press AC output power switch

3.4 AC charging

Quick charging technology is designed for AC charging. You can control the charging power via the AC charging speed switch. The slow charge mode is on by default when SR03KWL-SG1-US is turned on, and can be switched to quick charge mode by the button. Quick and slow charging mode switching can also be set by APP. If the current is continuously higher than 20A, the charging input port will start the self-protection function, and the charging overload protection switch will automatically trip. Press the charge overload protection switch to restore charging after confirming no fault.

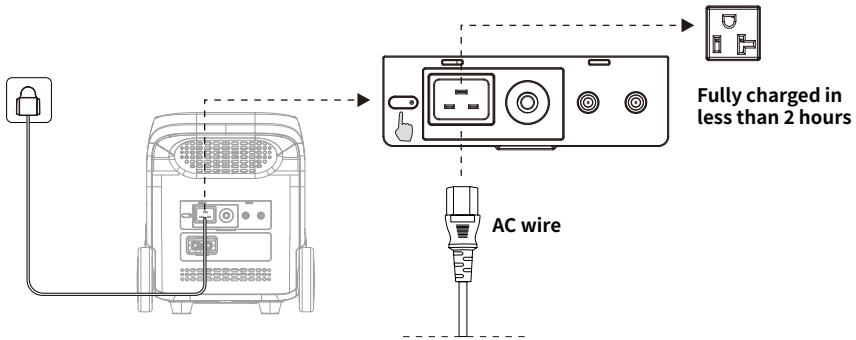

Quick charge and slow charge can be switched by the button.

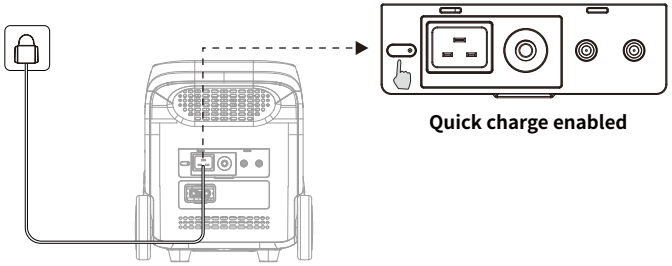

The charging power range can be adjusted by APP.

Please use the standard AC charging Cable for fast charging. AC Charging Cable should directly plug into 15A (or above) wall-mounted socket. We take no responsibilities for any damage caused by using unofficial AC charging cable, and other failures to follow instructions.

3.5 PV charging

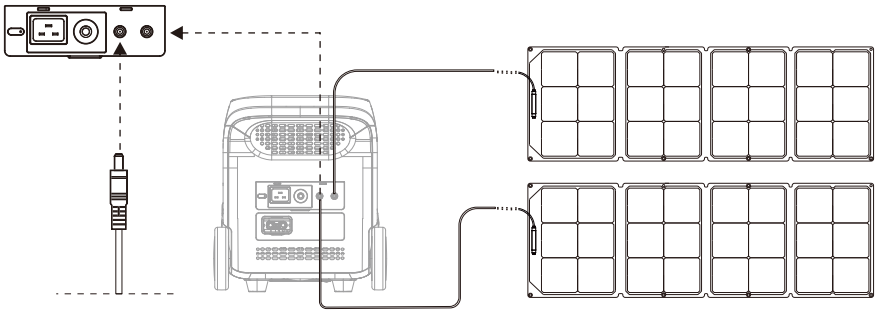

Users can use solar panels to charge SR03KWL-SG1-US as shown in the picture.

Dual solar panels supported.

***Solar charging cable (DC7909)**

- Please follow the user manual to connect the solar panels.
- Before connecting the solar panel, check whether its output voltage is within SR03KWL-SG1-US specifications to avoid damage to SR03KWL-SG1-US.

3.6 Car charging

SR03KWL-SG1-US can be charged by a car charging port. It should be charged after the car starts, so as to avoid the car battery loss and failure to start. At the same time, ensure good connection between the car charging port and cigarette lighter. We take no responsibilities for any loss caused by improper operation.

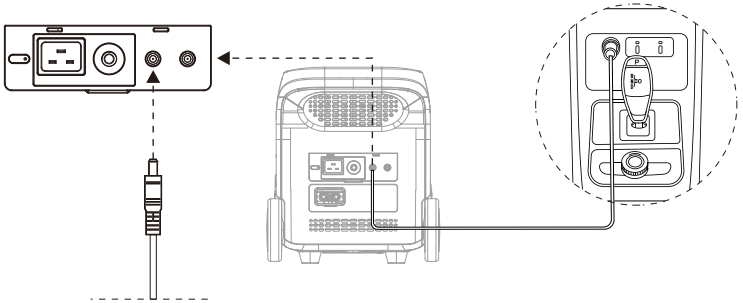

3.7 Battery expansion

SR03KWL-SG1-US supports connection with 6 expansion battery packs at the same time for larger capacity. Please refer to the user manual of battery pack for details.

Notes

1. Before connecting the battery pack, please make sure both SR03KWL-SG1-US and battery pack are off.
2. After the battery pack is connected, check if battery icon is shown in the displays of both SR03KWL-SG1-US and battery pack.
3. While in charging, please do not connect or remove the battery pack. If connection or need to connect or remove it, turn off SR03KWL-SG1-US prior to operation.
4. Please do not touch the metal terminals. If there is foreign matter on the metal terminals, clean it with a dry cloth gently and carefully.

Scenarios of battery pack connection

Scenario 1

❶ Turn off the power station and expansion battery pack.

❷ Plug one end of the cable to expansion port of power station, the other end to Power Output of battery pack.

❸ After parallelization, press power button ⏻ of power station to enable the power station and battery pack to show current capacity. The power station shows the paralleled quantity, and capacity is expanded.

❹ After parallelization, connect ports of the power station for charging or discharging (refer to clause 3.3, 3.4, 3.5 and 3.6).

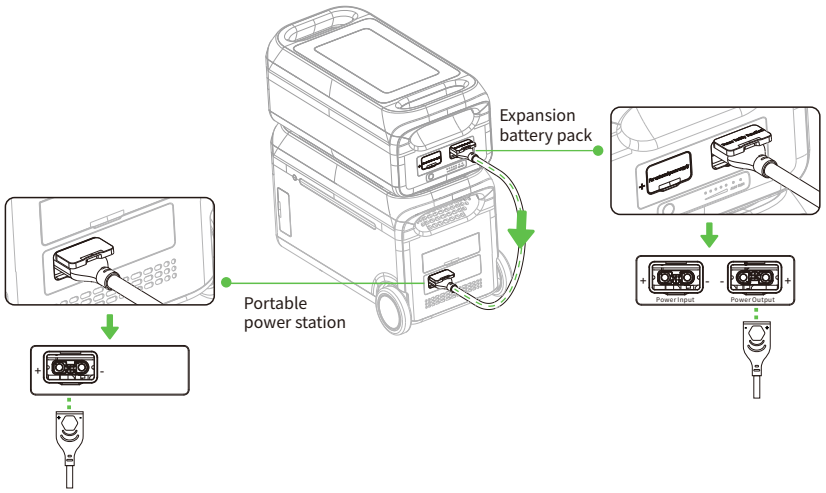

Remark: There are + and – symbols on battery packs and cables in case of reverse polarities.

Scenario 2

❶ Turn off the power station and expansion battery packs.

❷ Plug one end of cable #1 to expansion port of power station, the other end to Power Output of battery pack #1. Plug one end of cable #2 to Power Input of battery pack #1, the other end to Power Output of battery pack #2. Plug one end of cable #3 to Power Input of battery pack #2, the other end to Power Output of battery pack #3. 6 battery packs can be parallelized at most.

❸ After parallelization, press power button ⏻ of the power station to enable the power station and battery packs to show current capacity. The power station shows the paralleled quantity, and capacity is expanded.

❹ After parallelization, connect ports of the power station for charging or discharging (refer to clause 3.3, 3.4, 3.5 and 3.6).

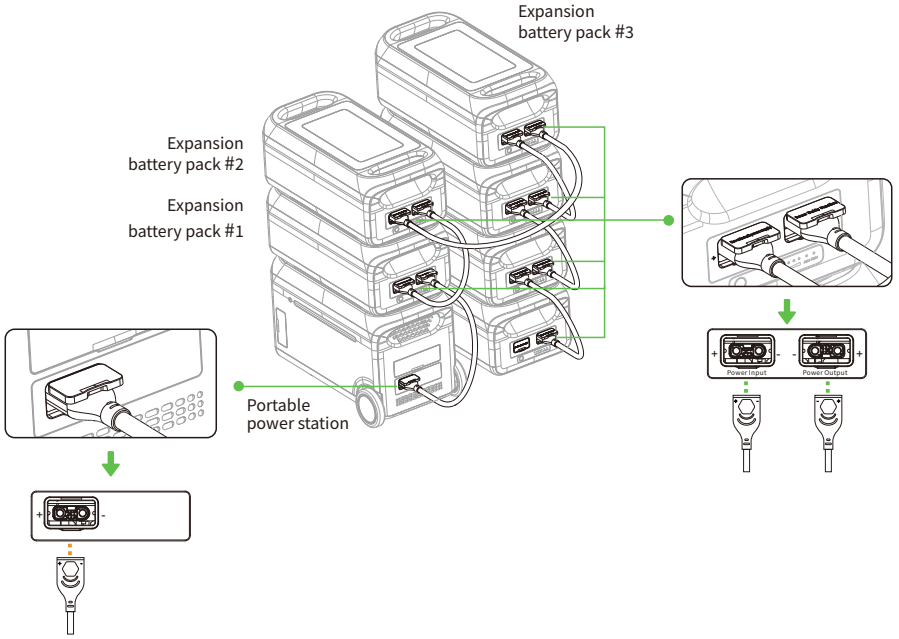

Remark: There are + and – symbols on battery packs and cables in case of reverse polarities.

3. Guideline for users

3.8 APP

You can control and view information and data about this product by App.

3.9 UPS function

This product supports the UPS function. When you connect the electrical appliance with SR03KWL-SG1-US by AC cable, the output enables the appliance to work. In such case, power is from grid instead of battery. When power grid is off, the power station can switch to battery-supplying mode within 14mS. Such function is unprofessional UPS, which does not support switch in 0mS, so do not connect it to equipment with strict UPS requirement, such as data server and workstation or please confirm compatibility after tests, and suggest only use one device instead of multiple devices at the same time so as not to cause overload to the power station. We shall not be liable for abnormal work or data loss arising from operation not following this user manual.

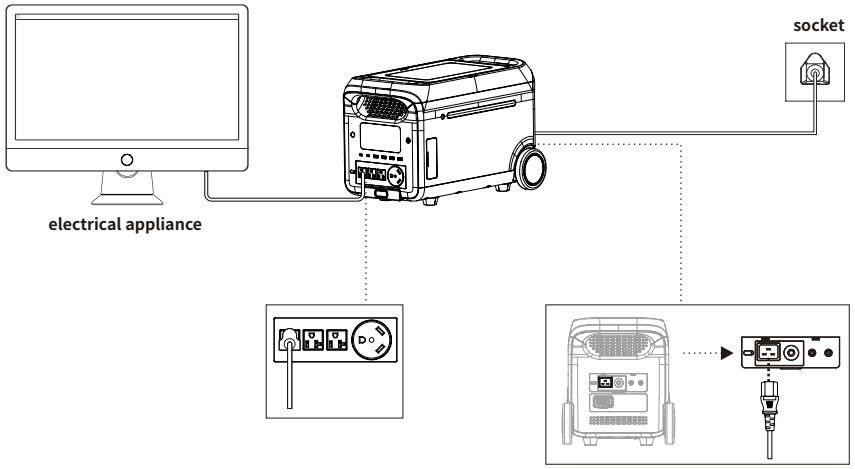

4. FAQs (Frequently Asked Questions)

1. What kind of battery is used?

Lithium iron phosphate battery ($LiFePO_4$).

2. What equipment can be connected to the AC output ports?

The AC output has high rating power and maximum power, which enables it to supply power to most household appliances. Suggest check the equipment power prior to connecting and make sure power of all equipment lower than rated power.

3. How to know the supply time?

Time shows in the LCD, which can be referred to for estimation for equipment with stable power consumption.

4. How to know it is charging?

When in charge, the LCD shows remaining charging time. The SOC flickers, and input power is shown.

5. How to clean the unit?

Clean the unit with a dry, soft and clean cloth or tissue.

6. How to store the unit?

Turn it off, and keep it in a dry and ventilated place. Do not expose it close to water. For long-term storage, suggest discharge to 0% and charge to 100% every 3 months to extend the service life.

7. Can it be taken on board?

No.

5. Error messages & solutions

Icon		Fault Description	Solution
01 Error	Error code always on	Serious battery fault	Turn on and off, contact after sales if still not fixed.
02 Error	Error code always on	ΔV too big	Auto shutdown, fault will be cleared after reboot.
03 Error	Error code always on	BMS voltage fault	
Over 04 Error	High temperature icon flickers Error code always on	Battery OTP (over temperature protection) fault	Auto shutdown, temperature recovery enables starting up.
Low 05 Error	Low temperature icon flickers Error code always on	Battery UTP (under temperature protection) fault	
06 Error	Error code always on	OCP (over current protection) fault	Auto shutdown, fault will be cleared after reboot.
Over 07 Error	High temperature icon flickers Error code always on	OTP fault	Auto shutdown, delayed start.
08 Error	Error code always on	Pre-charge fault	Auto shutdown, fault will be cleared after reboot.
09 Error	Error code always on	Battery under voltage fault	Auto shutdown and charge, contact after sales if still not fixed after multiple charging failures.
10 Error	Error code always on	Abnormal parallelization	Check the connection cable. Contact after sales if still not fixed. Single power station function is not affected.
11 Error	Error code always on	Abnormal INV battery voltage	Auto recover after fault is cleared.
12 Error	Error code always on	Grid voltage or frequency fault	The fault is cleared when the grid returns to normal.
13 Error	Error code always on	Abnormal INV BUS voltage	Auto recover after fault is cleared.
14 Error	Error code always on	Abnormal INV output	
Overload 15 Error	Overload icon always on Error code always on	INV discharge overload	Remove over-power device. Auto recover after fault is cleared.
Overload 16 Error	Overload icon always on Error code always on	Charge overload	Auto recover after fault is cleared.
17 Error	Error code always on	INV Tz	
18 Error	Error code always on	Battery short	Fault will be cleared after reboot.
19 Error	Error code always on	INV output short	
Over 20 Error	High temperature icon flickers Error code always on	MOSFET OTP fault	Auto recover after product is cooled down.

If there is a warning occurs during the use of this product, and the warning icon still does not disappear after restarting the device, please stop using it immediately (do not try to charge or discharge).

5. Error messages & solutions

Icon		Fault Description	Solution
21 Error	Error code always on	Fan stop	Turn on and off, contact after sales if still not fixed.
22 Error	Error code always on	Discharge soft start fault	Auto recover after fault is cleared.
23 Error	Error code always on	Charge soft start fault	
Low 24 Error	Low temperature icon flickers Error code always on	MOSFET UTP fault	Turn on and off, contact after sales if still not fixed.
25 Error	Error code always on	Anderson hardware OCP fault	Remove PV charge, auto recover after connecting PV and turn on.
26 Error	Error code always on	Anderson software OCP fault	Turn off output, manual recover after fault is cleared.
27 Error	Error code always on	PV hardware OCP fault	Remove PV charge, auto recover after connecting PV and turn on.
28 Error	Error code always on	PV1 software OCP fault	Stop PV1 charging, auto recover after connecting PV and turn on.
29 Error	Error code always on	PV2 software OCP fault	Stop PV2 charging, auto recover after connecting PV and turn on.
30 Error	Error code always on	Car charge output OCP fault	Turn off output, manual recover after fault is cleared.
31 Error	Error code always on	PV output OVP (over voltage protection) fault	Stop PV. Auto recover after fault is cleared.
32 Error	Error code always on	PV1 input OVP fault	Stop PV1. Auto recover after fault is cleared.
33 Error	Error code always on	PV2 input OVP fault	Stop PV2. Auto recover after fault is cleared.
Over 34 Error	High temperature icon flickers Error code always on	Anderson OTP fault	Turn off output, manual recover after fault is cleared.
Over 35 Error	High temperature icon flickers Error code always on	PV1 OTP fault	Stop PV1. Auto recover after fault is cleared.
Over 36 Error	High temperature icon flickers Error code always on	PV2 OTP fault	Stop PV2. Auto recover after fault is cleared.
Over 37 Error	High temperature icon flickers Error code always on	Car charge output OTP fault	Turn off output, manual recover after fault is cleared.
38 Error	Error code always on	Abnormal communication	Turn on and off, or change operation environment. Contact after sales if still not fixed.
USB-A 39 Error	USB icon flickers Error code always on	Abnormal USB	Auto recover after removing abnormal USB.
USB-C 40 Error	Type C icon flickers Error code always on	Abnormal type C	Auto recover after removing abnormal type C.

If none of the above information can solve problem you encounter, please contact the customer service for consultation.

6. What’ s in the box

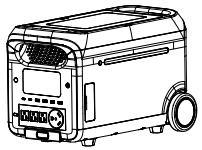

SR03KWL-SG1-US

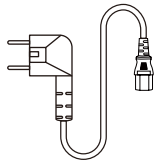

AC cable

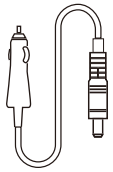

Car charge cable

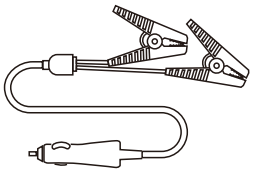

Car battery jumper cable

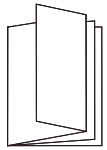

User manual

7. Entretien

- Il est recommandé d’ utiliser ou de stocker SR03KWL-SG1-US à une température ambiante de 20 à 30 °C. Gardez-le loin de l’ eau, du chauffage et des pièces métalliques.
- Pour le stockage à long terme, charger et décharger tous les 3 mois, i.e. décharge à 0% puis charge à 100%.
- Pour des raisons de sécurité, ne stockez pas SR03KWL-SG1-US à une température supérieure à 45 °C ou inférieure à -10 °C.
- Si la capacité est inférieure à 1%, veuillez facturer à 60%. Le stockage à long terme avec une grave pénurie d’ électricité causera des dommages irréversibles à la cellule et raccourcira la durée de vie du produit.
- Si la capacité est sérieusement insuffisante et que le temps d’ inactivité est trop long, le produit passe en mode veille prolongée et ne peut être utilisé qu’ après avoir été chargé.

Disclaimer

Before using the power station SR03KWL-SG1-US, please read this user manual to ensure understanding and proper use. After reading the user manual, please keep it well for future reference. Improper operation may cause serious injury to yourself or others, or result in product damage and property loss. Once using SR03KWL-SG1-US, you are deemed to have understood and accepted all terms and contents herein. Users promise to be responsible for their actions and all consequences arising therefrom. We shall not be liable for any loss arising from user’ s not following this user manual.

In compliance with laws and regulations, the company reserves the right of final interpretation of this document and all related documents of this product. Subject to update, revision or termination without prior notice, please visit the official website for the latest product information.

ISED Statement

This device contains licence-exempt transmitter(s)/receiver(s) that comply with?Innovation, Science and Economic Development?Canada’s licence-exempt RSS(s). Operation is subject to the following two conditions:
1.This device may not cause interference.
2.This device must accept any interference, including interference that may cause undesired operation of the device.
The device has been evaluated to meet general RF exposure requirement. The devicecan be used in portable exposure condition without restriction.
Le présent appareil est conforme aux CNR d'Industrie Canada applicables auxappareils radio exempts de licence. L' exploitation est autorisée aux deux conditions suivantes : (1)l' appareil ne doit pas produire de brouillage, et (2) l'utilisateur de l'appareil doit accepter toutbrouillage radioélectrique subi, même si le brouillage est susceptible d'en compromettre lefonctionnement.
L'appareil a été évalué pour répondre aux exigences générales d'exposition aux RF. L' appareil peut être utilisé dans des conditions d'exposition portable sans restriction.

FCC Statement

This device complies with Part 15 of the FCC Rules. Operation is subject to the following two conditions:
(1)This device may not cause harmful interference.
(2)This device must accept any interference received, including interference that may cause undesired operation.
2. Changes or modifications not expressly approved by the party responsible for compliance could void the user’s authority to operate the equipment.
Note:This equipment has been tested and found to comply with the limits for a class B digital device, pursuant to Part 15 of the FCC Rules. These limits are designed to provide reasonable protection against harmful interference in a residential installation.
This equipment generates uses and can radiate radio frequence energy and,if not installed and used in accordance with the instructions,may cause harmful interference to radio communications.However, there is no guarantee that interference will not occur in a particular installation.if this equipmemt does cause harmful interference to radio or television reception,which can be determined by turning the equipment off and on,the user is encouraged to try to correct the interference by one or more of the following measures:

- Reorient or relocate the receiving antenna.
- Increase the separation between the equipment and receiver.
- Connect the equipment into an autlet on a circuit different from that to which the receiver is conne cted.
- Consult the dealer or an experienced radio/TV technician for help.

The device has been evaluated to meet general RF exposure requirement. The devicecan be used in portable exposure condition without restriction.
This equipment should be installed and operated with a minumum distance of 20 cm between the radiator and your body.