LYNKNEX

DESIGN AWARD 2023

reddot winner 2022

LYNKNEX PX5

Quick Start Guide

Thank you for choosing Lynknex Product!

Copyright © 2022 Shenzhen Lynknex Technologies Co., Ltd.

Disclaimer

Specifications and documents are subject to change without notice.

Shenzhen Lynknex Communications Co., Ltd.

Note

- Before using the product, please read the Quick Guide to fully benefit from it.
- Warranty period is 1 year from date of purchase.
- This product involves constant upgrading and/or improvement, Lynknex reserves the right to change the specifications of software and/or hardware mentioned in this operating guide without any prior notice. The product specifications and information mentioned in the operating guide are for reference only.

What's In The Box

Please check the following accessories before you discard the packing material.

Accessories	Quantity
PX5	1
Type-C USB cable	1
Battery	1
Charging Adaptor	1
Quick Start Guide	1

PX5 Overview

Indicator Light Status

Operation State	Indication Color
Low Battery	Red (Blinking)
Charging	Red (Steady)
Fully Charged	Green (Steady)
PTT Transmitting	Red (Steady)
PTT Receiving	Green (Steady)

Installation of SIM card

1. Counterclockwise the switch of battery cover, open it and remove battery
2. Insert the SIM card as shown in the picture
3. Insert the SD card into the slot as shown in the picture
4. Put back the battery and the battery cover and press the cover firmly before clockwise the switch

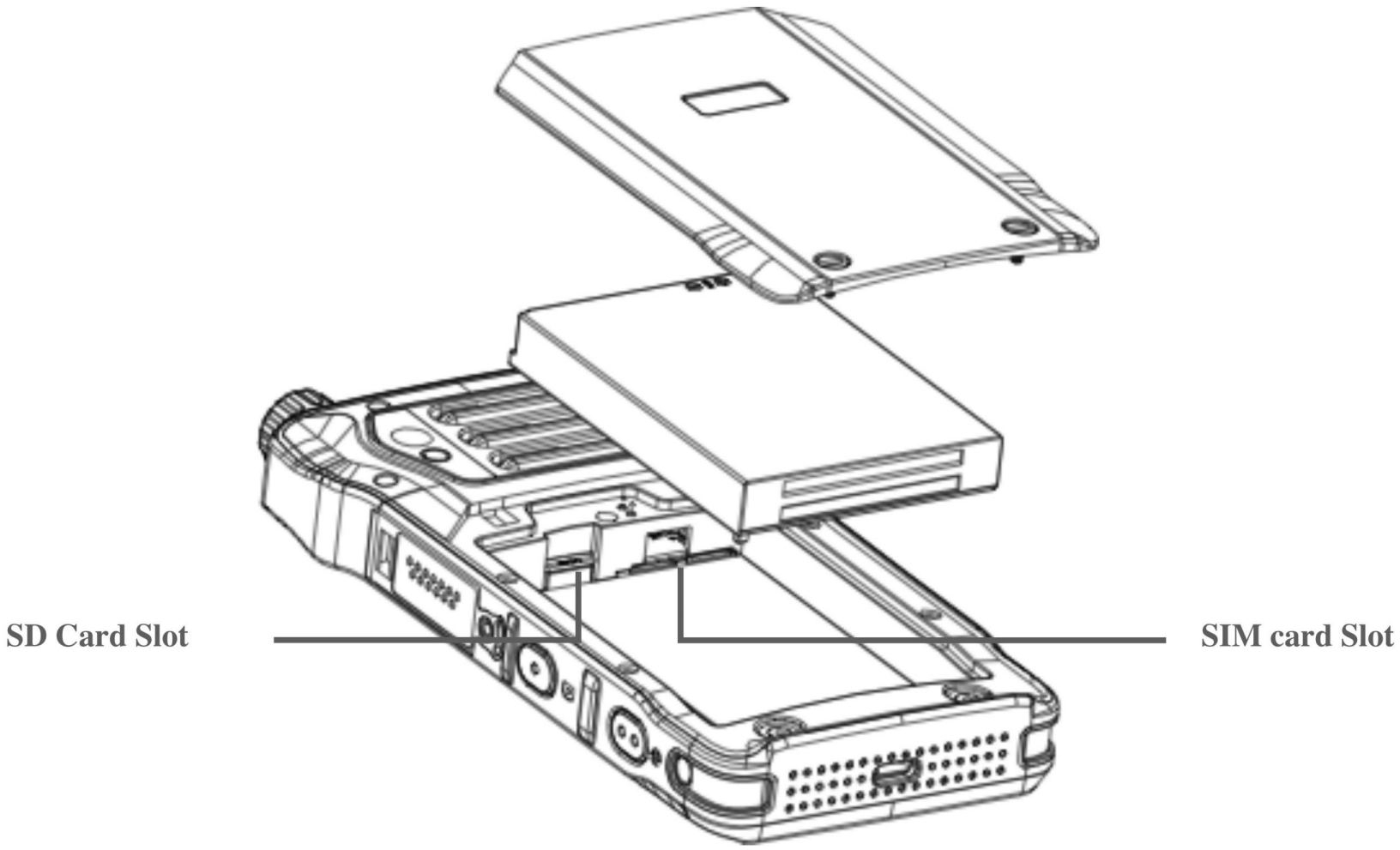

Charging the Battery

Using Desktop Charger

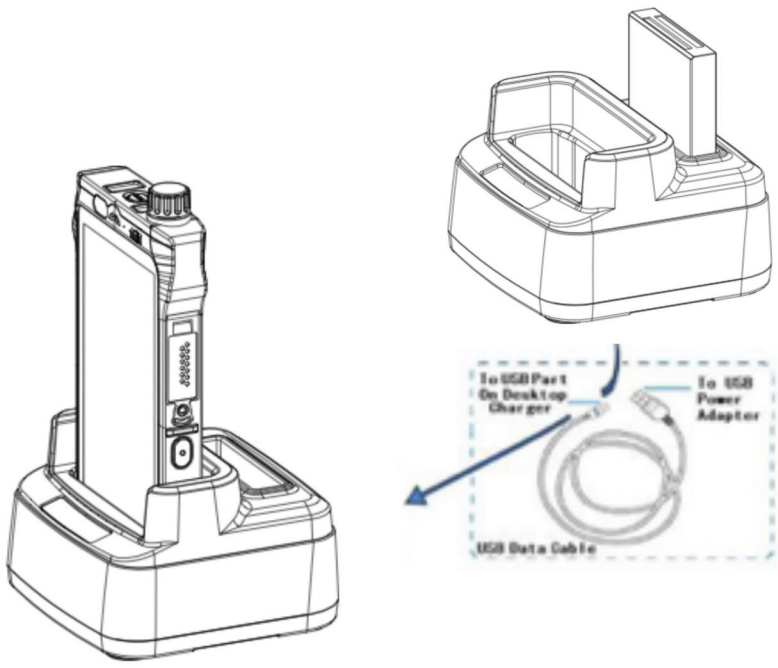

- Connect the Desktop Charger and the Power Adapter using the USB Cable.
- Red light on the desktop charger indicates battery charging in progress.
- Green light on the desktop charger indicates fully charged.

Using USB Cable

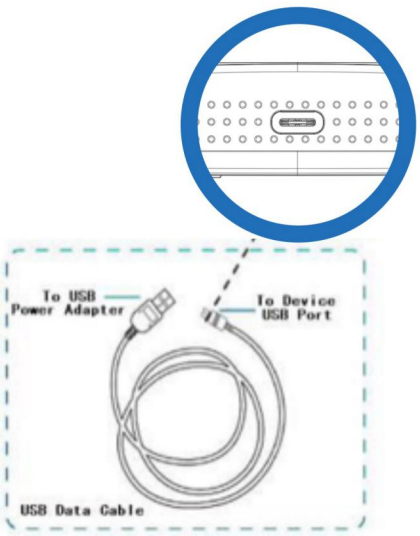

- Connect the PX5 and power adapter using the USB Cable.
- Red light on the PX5 indicates battery charging in progress.
- Green light on indicates fully charged.

WARNING: DO NOT USE THE ABOVE TWO CHARGING METHODS SIMULTANEOUSLY.
Important:
Use only the approved and certified charger.
Battery must be fully charged before first use.
Do not expose the battery to high temperature.
Do not dismantle the battery.

4. Basic operations

Switch On The PX5

Press the Power button for 3~4 seconds to turn on the display

Shut Down

Press the power button for 2 seconds, click the “Power Off”, the PX5 will shut down.

MC QuickControl Knob

- **Knob:** MC QuickControl Knob is functioning as talk group selection, press the knob to switch between volume selection and talk group selection.
- Talk Group Selection
- **Push to Talk Button:** Press and hold to take floor control and start voice communications, release to stop
- **Emergency Button:** Press to trigger SOS emergency alarm. (Refer to 3rd party application operation and function)
- **Programmable Button:** Configurable quick control buttons as per dedicated application features. (Refer to 3rd party application operation and function)

Gesture Navigation

Lynknex PX5 has implemented gesture navigation on the touch screen, greatly enhance the user experience especially when operating multiple apps.
To go Home, swipe up from the bottom of the screen. To switch apps, swipe up from the bottom, hold, then release. To go back, swipe from either the left of right edge

Home Button

When screen backlight off, wake up screen.
Screen backlight on, press to return to previous screen or exit application window.

Troubleshooting

No	Problem	Indication
1	The device does not turn on	•Battery might be drained, please charge it or replace the battery. •Battery might not be installed correctly, please remove and reinstall the battery or replace it with a fully charged battery.
2	Unable to make / receive calls	•Check whether the network is connected
3	Silence and no audio	•Check the volume settings
4	Cannot Charge	•Check USB cable, replace if faulty.

Product Safety Warnings

1. This product uses a rechargeable lithium battery as a power source. When the power is low, please charge the battery. To maintain battery life, it is recommended to deplete the battery's power before charging.

2. When the battery charger is not in use, please remove it from the power supply. Do not connect the charger to the battery for more than one week. Excessive charging will shorten the battery life.

3. Temperature affects the battery charging limit. Therefore, the battery may need to be cooled or warmed up before charging.

4. Please use the battery for its original intended purpose to prevent short-circuiting the battery. A short circuit will occur when a conductive material connects the battery’s positive and negative terminals.

5. Do not use a battery that is damaged.

6. Placing the battery in extremely cold or hot places will lead to shortened battery life. Exposing the battery to extreme temperatures may cause the phone to malfunction, even if the battery is fully charged.

7. Do not put the battery in a fire. Please discard the battery in a proper manner or take the battery to a battery recycling station. Please dispose waste batteries in accordance with local laws and regulations.

8. Do not install or use the device during lightning storms to avoid the potential risks of lightning shock;

9. Please turn off the power immediately if you notice abnormal odor, heat or smoke;

Suggestions

· Do not use the terminal in extremely cold or hot environments;

· Use the terminal in a clean and dust-free environment if possible to prevent small items from fall ing into the terminal;

· Do not use the terminal near medical equipment without permission

FCC Warning

This device complies with part 15 of the FCC Rules. Operation is subject to the following two conditions: (1) This device may not cause harmful interference, and (2) this device must accept any interference received, including interference that may cause undesired operation.

Any Changes or modifications not expressly approved by the party responsible for compliance could void the user's authority to operate the equipment.

Note: This equipment has been tested and found to comply with the limits for a Class B digital device, pursuant to part 15 of the FCC Rules. These limits are designed to provide reasonable protection against harmful interference in a residential installation. This equipment generates uses and can radiate radio frequency energy and, if not installed and used in accordance with the instructions, may cause harmful interference to radio communications. However, there is no guarantee that interference will not occur in a particular installation. If this equipment does cause harmful interference to radio or television reception, which can be determined by turning the equipment off and on, the user is encouraged to try to correct the interference by one or more of the following measures:

-Reorient or relocate the receiving antenna.

-Increase the separation between the equipment and receiver.

-Connect the equipment into an outlet on a circuit different from that to which the receiver is connected.

-Consult the dealer or an experienced radio/TV technician for help.

Specific Absorption Rate (SAR) information:

This Smart phone meets the government's requirements for exposure to radio waves. The guidelines are based on standards that were developed by independent scientific organizations through periodic and thorough evaluation of scientific studies. The standards include a substantial safety margin designed to assure the safety of all persons regardless of age or health.

FCC RF Exposure Information and Statement

The SAR limit of USA (FCC) is 1.6 W/kg averaged over one gram of tissue. Device types: smart phone (FCC ID: 2BBDV-PX5) has also been tested against this SAR limit. The highest SAR value reported under this standard during product certification for use at the ear is 0.502W/kg and when properly worn on the body is 1.330 W/kg. This device was tested for typical body-worn operations with the back of the handset kept 10mm from the body. To maintain compliance with FCC RF exposure requirements, use accessories that maintain a 10mm separation distance between the user's body and the back of the handset. The use of belt clips, holsters and similar accessories should not contain metallic components in its assembly. The use of accessories that do not satisfy these requirements may not comply with FCC RF exposure requirements, and should be avoided.

Body-worn Operation

This device was tested for typical body-worn operations. To comply with RF exposure requirements, a minimum separation distance of 10mm must be maintained between the user’s body and the handset, including the antenna. Third-party belt-clips, holsters, and similar accessories used by this device should not contain any metallic components. Body-worn accessories that do not meet these requirements may not comply with RF exposure requirements and should be avoided. Use only the supplied or an approved antenna.

This device does not support PMR function