HAI ROBOTICS

VCP System

User Manual

Applicable models: HAIPICK A42-E4, A42T-E1/E2 series

HAIPORT P10-E2, HAIFLEX K50H

Version: V1.1

Date: 2023-11-01

© HAI ROBOTICS Co., Ltd. All rights reserved.

Foreword

Thank you for choosing the products of HAI ROBOTICS Co., Ltd. (hereinafter referred to as "HAI ROBOTICS"). This manual contains the necessary information for the correct use of this product. Please read this manual carefully before using the product. Keep this manual safe for future reference.

Document Overview

This manual mainly describes the safety precautions, system overview, main components, technical specifications, operational instructions, and troubleshooting methods of the Vest Clothing Personnel system (hereinafter referred to as "the VCP system"). The manual aims to help users correctly use the product; it can also be used as training and instruction materials for the operators and maintenance personnel of the VCP system.

Intended Readers

- End users
- Operations personnel
- Maintenance personnel
- Solution integrators

Symbols and Conventions

This manual uses some symbols to highlight safety or important notes. Pay attention to text marked with the following symbols and follow the instructions.

Symbols	Meaning
DANGER	Indicates an imminently hazardous situation which, if not avoided, can result in death or severe injury to personnel.
WARNING	Indicates a potentially hazardous situation which, if not avoided, could result in injury to personnel and damage to robot or equipment.
CAUTION	Indicates an unpredictable situation which, if not avoided, may lead to robot or equipment damage, performance degradation, and data loss.
TIPS	Indicates key information and tips for operation skills.

Copyright

© 2023 HAI ROBOTICS Co., Ltd. All rights reserved.

HAI ROBOTICS owns this product's patents, copyrights, and other intellectual property rights and software. Without the company's written authorization, no organization or individual may extract or copy the contents of this manual, directly or indirectly reproduce, manufacture, process, or use this product and its related parts, and use part or all content of this Manual for commercial purposes in any form.

Trademark

HAI ROBOTICS is a registered trademark of HAI ROBOTICS CO., LTD. HAI ROBOTICS owns this trademark, which cannot be used for other commercial purposes without the company's written permission.

Disclaimer

Due to product updates, improvements, or other reasons, HAI ROBOTICS will irregularly update the content and product in this manual. HAI ROBOTICS reserves the right to modify the products and product specifications in this manual without prior notice. The information in this manual is used for reference only and does not constitute any form of commitment. Functions and specifications are subject to the actual product.

HAI ROBOTICS shall not be liable for any direct, indirect, special, incidental, or consequential losses and responsibilities arising from improper use of this manual or this product or related to it.

Contact

HAI ROBOTICS CO., LTD.

No. 99, Gushu 2nd Road, Nanchang Community, Xixiang Subdistrict, Baoan District, Shenzhen, China

Tel: +86-0755-23208112

Cooperation: partnership@hairobotics.com

Support: support@hairobotics.com

Website: www.hairobotics.com

Change History

Version	Date	Changes
V1.0	2023-11-01	Initial release

Contents

Foreword I
Change History III
Contents IV
Chapter 1 Safety Precautions 1
1.1 Warning Signs 1
1.2 General Safety 1
1.3 Battery Safety 2
1.4 Personnel Safety 3
Chapter 2 System Overview 4
2.1 Overview 4
2.2 Application Scope 4
2.3 System Layout 4
2.4 System Flowchart 5
Chapter 3 Hardware 6
3.1 Introduction 6
3.2 Main Components 7
3.2.1 VCP 7
3.2.2 VPT 8
3.2.3 VRT/VDR 9
3.2.4 VST 10
3.2.5 Operation Buttons 10
Chapter 4 Specifications 12
Chapter 5 Functions 13
Chapter 6 Installation 14
Chapter 7 Operation 15
7.1 System Interaction 15
7.2 Battery Charging 18
Chapter 8 Routine Maintenance 20
8.1 Regular Cleaning 20
8.2 Storage 20
Chapter 9 Troubleshooting 21
Appendix A Regulatory Compliance 23

Chapter 1 Safety Precautions

This chapter describes the safety precautions. Read all the following items carefully before operation, and note that any improper use may result in equipment damage or personnel injuries, or even casualties. HAI ROBOTICS shall not be held responsible for any personnel or equipment losses caused by violation of the following precautions.

CAUTION

Abide by local and international rules and regulations before maintenance operations. The safety precautions in this manual serve only as a supplement to safety rules and regulations.

Before using this product, read and follow the precautions below carefully to ensure personnel and equipment safety.

1.1 Warning Signs

The following warning signs might be pasted on the Vest Personnel Terminal (VPT) module. Obey the instructions on these signs to ensure personnel and equipment safety during operation.

Sign	Description	Location
	The device generates radio waves that may affect the functionality of electronic medical devices.	VPT
	Read the user manual before using this device.	VPT

1.2 General Safety

- A VCP can run only in warehouses that support the VCP system.
- A maximum of two working VCPs are allowed on a site.
- Ensure that you wear a VCP if you need to access the site and work without interrupting the system.
- Refrain from keeping any electronic devices or metal objects (such as mobile phones, laptops, tablets, walkie-talkies, wrenches, hammers, and screwdrivers) near the VPT while wearing a VCP. To prevent any signal interference, it is advisable to maintain a minimum distance of 20 cm. Failure to do so may result in potential harm to individuals.
- Before performing any operations, check the working status of a VCP. A malfunctioning VCP can disrupt equipment's normal operation.

- Do not alter or disassemble a VCP, because it can impair the equipment's detection capability and may lead to equipment malfunctions or personal injury.
- The manufacturing and transportation of VCPs must adhere to stringent quality control measures. If any defects are identified in the product, contact HAI ROBOTICS.
- Our company shall not be held liable for any damages that may arise from the improper use of the product.
- Installation and operation must be carried out by professionals in accordance with the instructions in this manual.

1.3 Battery Safety

Improper use of the battery can lead to overheating, rupture, and potential harm to individuals. Ensure that you adhere to the following safety guidelines:

- Do not put the battery in close proximity to an induction cooker, a gas stove, or any other areas with high temperatures.
- Do not keep or transport the battery alongside screws, nails, wires, or any other metallic objects.
- Do not short circuit, disassemble, penetrate, burn, crush, soak, or forcibly discharge the battery. Otherwise, the battery may be damaged.
- Avoid excessive vibration and collision in the use of the battery. Otherwise, the battery may be damaged.
- Ensure that the battery remains dry and is not exposed to water or saltwater.
- Do not disassemble or alter the battery. The battery is equipped with safety and protection mechanisms, and any damage to it can result in overheating, rupture, or even ignition.
- Do not use this product in unsuitable environments, for example, where the temperature and humidity exceed the specified ranges. Otherwise, the battery may be damaged or even overheated, ruptured, or ignited.
- If the battery is worn, insulate it with tape or a similar material before any further treatment.
- If you notice any unusual odor, heat, color changes, swelling, or any other exceptions in the battery during usage, charging, or storage, discontinue its use immediately.
- In the event of a battery leakage causing liquid to enter the eyes, do not rub your eyes. Instead, rinse them thoroughly with water and promptly seek medical attention. Failing to treat this situation promptly may result in potential damage to the eyes caused by battery liquid.

1.4 Personnel Safety

- Personnel in charge of installing, operating, and maintaining HAI ROBOTICS products must undergo strict training, understand safety information, and master correct operations and maintenance methods.
- Only personnel trained by HAI ROBOTICS or an authorized training institution, or personnel with required professional skills can install, operate and maintain this product.
- Personnel in charge of mounting and commissioning, operation and maintenance, and solution development must read this manual carefully, and use this product in strict accordance with the safety information.

Chapter 2 System Overview

2.1 Overview

The VCP system is a system solution that integrates with HAIPICK/HAIFLEX robots, HAIPORT automatic loading and unloading machines, and guard doors. A VCP functions as a device to detect the presence of individuals. It operates by facilitating communication between the VPT module and the Vest Robot Terminal (VRT) and Vest Sensor Terminal (VST) modules on the HAIPICK side. This communication allows robots to identify the persons' locations and determine whether they are staying within a safe distance. Consequently, the HAIPICK robots can reduce the speed or come to a halt.

The system consists of several hardware modules, including VCP, VPT, VRT, VST, and Vest Door Robot (VDR). For details about the modules, see 3.1 Introduction. The system involves such roles as personnel, robots, guard doors, and HAIPORT, which collaborate to ensure compliance with onsite safety requirements.

2.2 Application Scope

The system is applicable to HAIPICK A42-E4 and A42T-E1/E2 series robots as well as HAIPORT P10-E2 and HAIFLEX K50H robots.

2.3 System Layout

The following figure shows the overall layout of the system. During onsite deployment, different work zones will be specified. The specific layout shall be subject to the actual conditions of a project.

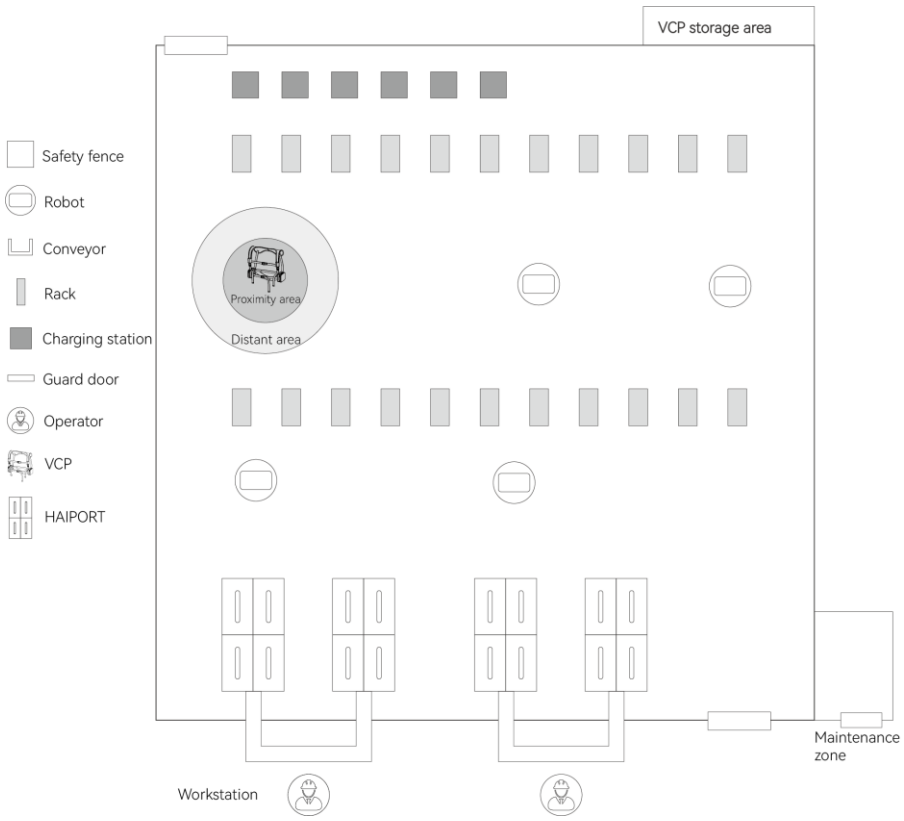

Figure 2-1 System layout

2.4 System Flowchart

The system enables interaction between HAIPICK/HAIFLEX robots, HAIPORT, and guard doors based on the feature signals emitted by the VPT. Before entering the site, you must wear a VCP. After the vest signal is detected by either HAIPICK robots or HAIPORT, they slow down or come to a halt to ensure compliance with onsite safety requirements.

The following figure shows the system flowchart.

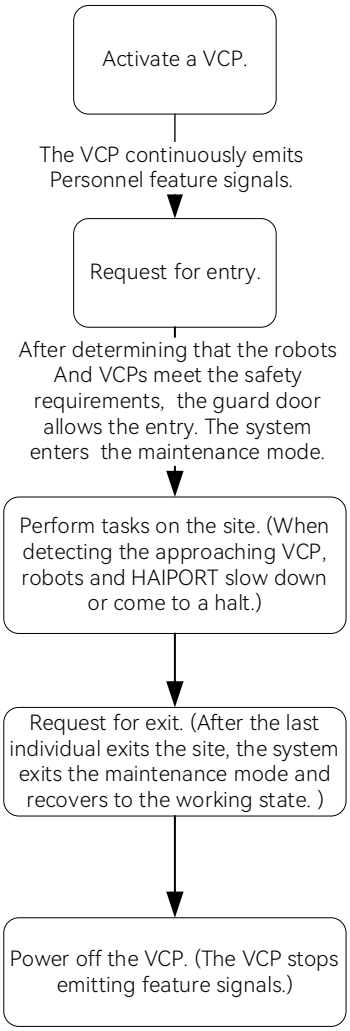

Figure 2-2 System flowchart

Chapter 3 Hardware

3.1 Introduction

The following figure shows the components that may be involved in the system. The VCP modules used for HAIPICK robots are the same as those for HAIPORT. VCP-related modules will be installed on guard doors. The specific layout shall be subject to the actual conditions of a project.

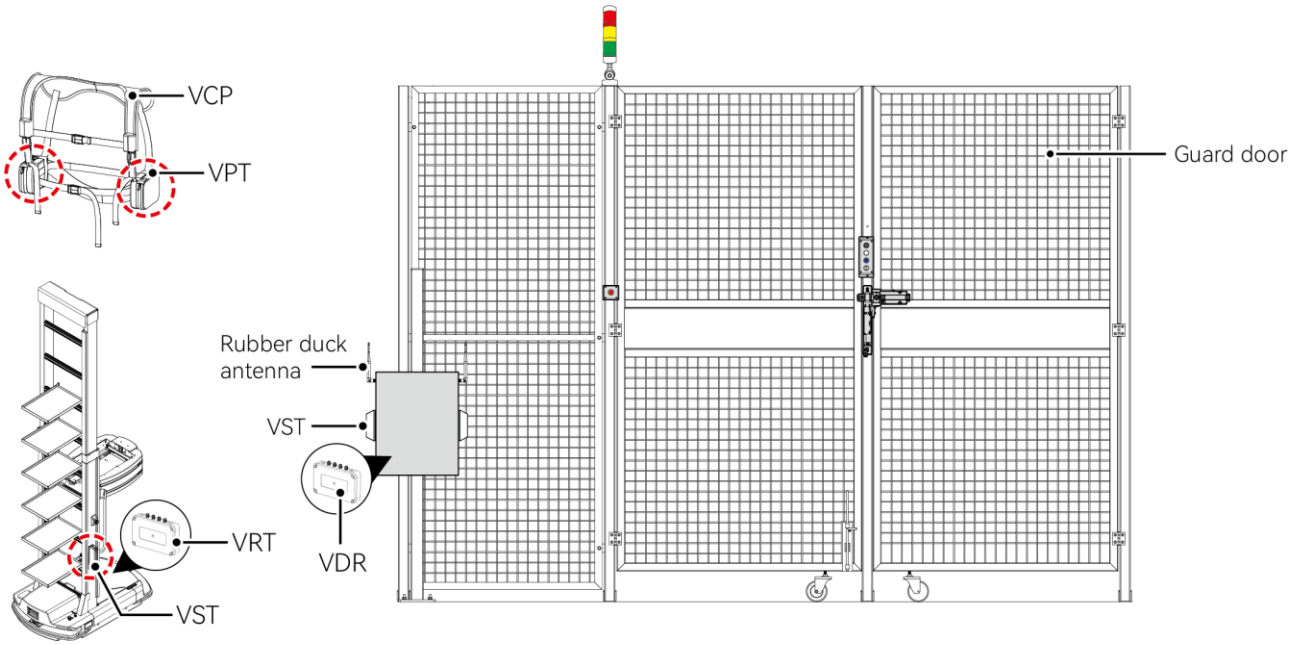

Figure 3-1 Component locations

Components

Component	Description
VCP	Safety protection device worn by personnel
VPT	Personnel-side device that emits personnel feature signals
VRT/VDR	● VRT: robot-side module ● VDR: guard door-side module
VST	robot-side receiver
Rubber duck antenna	Used to receive fault signals from the VPT.
VCP request button	The VCP request button, located within a guard door, is used to signal a request for exiting the site.

3.2 Main Components

3.2.1 VCP

Operators are required to wear VCPs before entering a robot operating area. These VCPs are designed to be flexible and adjustable, allowing them to comfortably fit individuals with different body shapes.

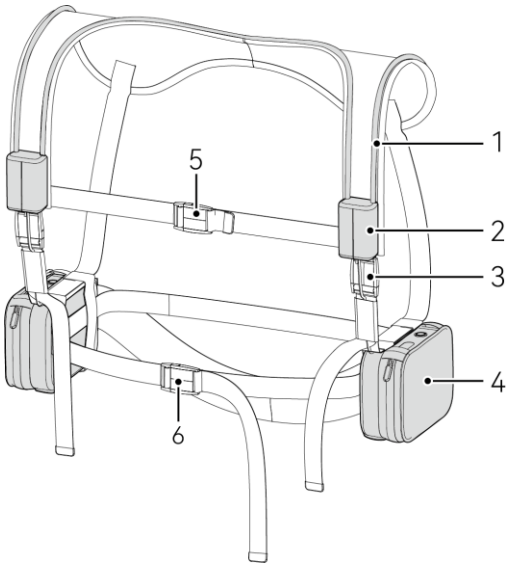

Figure 3-2 VCP

No.	Name	Description
1	External status LED	LED that indicates the status of a VCP and consists of a light strip and a light source. For details, see System status LED.
2	Light source module	The light of the external system status LED is secured to light source modules.
3	Shoulder strap	Component of a VCP that can be adjusted to accommodate different shoulder lengths
4	Side pockets	Pouches used to store VPT modules, one on each side of a VCP
5	Chest strap	Component of a VCP that can be adjusted to accommodate different chest sizes
6	Waist strap	Component of a VCP that can be adjusted to accommodate different waist sizes

System status LED

Indicator Color	Buzzer Status	Equipment Status
Blinking green	/	The equipment is working properly.
Blinking red	The buzzer	The equipment battery is low. An alarm is triggered when the

Indicator Color	Buzzer Status	Equipment Status
	keeps buzzing periodically.	battery SOC drops below 30%, and all personnel must leave the site as soon as possible.
Flashing red	The buzzer emits a continuous and rapid sound.	The hardware module is abnormal, and all personnel must leave the site immediately.

3.2.2 VPT

The VPT module is a crucial element of a VCP, mainly used to recognize robots. A VPT module comprises an activation button, status LEDs, and ports. Each VCP includes two VPT modules, a charger, and two batteries.

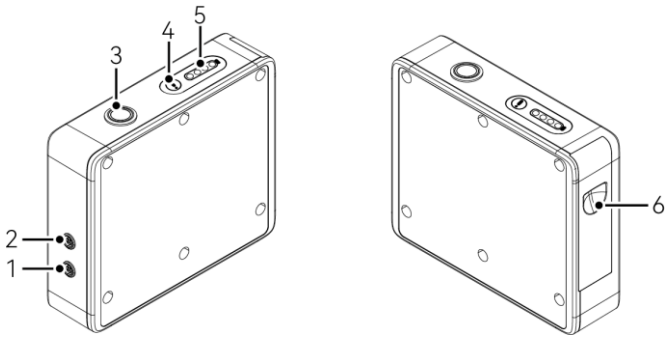

Figure 3-3 VPT

Table 3-1 Components

No.	Name	Description
1	Communication port	Used for the communication between two VPT modules.
2	Status LED port	Port of the external system status LED
3	Activation button	After you press this button, the LED blinks green and the VCP is activated.
4	System status LED	The status is consistent with that of the VCP indicator.
5	State of charge (SOC) indicator	Displays the real-time percentage of the remaining battery power for the VPT module.
6	Battery	Battery that can be easily detached, making the charging convenient

Charger

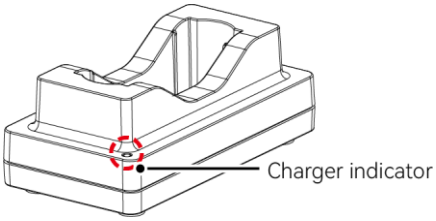

Figure 3-4 Charger

Table 3-2 Charger indicators

Indicator Color	Indicator Status	Charging Status
Red/Orange/Green	The indicators are turned on individually.	The charger performs a self-check.
Red/Green	The indicator blinks.	The battery is being recognized and initialized.
Orange	The indicator is steady on.	The battery type is correct and the battery is being charged.
Green	The indicator is steady on.	The battery is fully charged and can be detached for use.
Red	The indicator is steady on.	Charging fails due to a battery error.

3.2.3 VRT/VDR

VRT and VDR are main modules of the system. The VRT module is installed on HAIPICK robots, whereas the VDR module is generally located in the electrical cabinets of guard doors. Perform wiring correctly for corresponding ports.

VRT and VDR modules have identical structures, with the main distinction being the nameplate information displayed on the equipment.

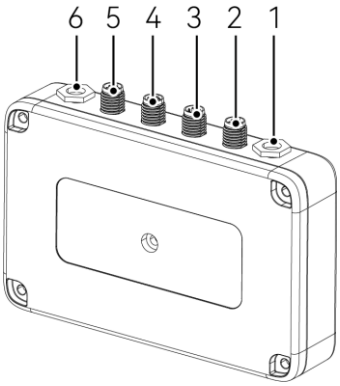

Figure 3-5 Main modules

1. Antenna port 1
2. Receiver port 1
3. Master control board port
4. Safety controller port
5. Receiver port 2
6. Antenna port 2

3.2.4 VST

The VST module functions as a receiver on the robot and guard door sides to receive signals transmitted by a VCP.

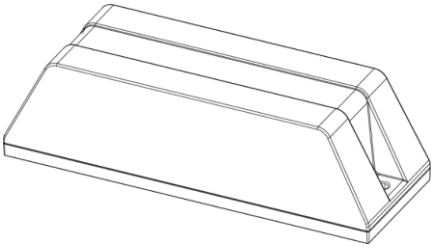

Figure 3-6 Receiver

TIPS

A receiver is used to receive signals transmitted by a VCP. During installation, keep the receiver uncovered by any metal objects and refrain from disassembling it without permission.

3.2.5 Operation Buttons

The system has one VCP request button and one button switch box.

VCP Request Button

The VCP request button, located within a guard door, is used to signal a request for exiting the site.

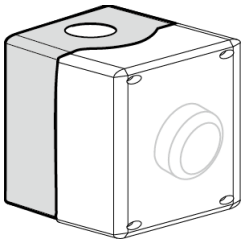

Figure 3-7 Request button

Button Switch Box

Press different buttons to control the robot state in a robot operating zone.

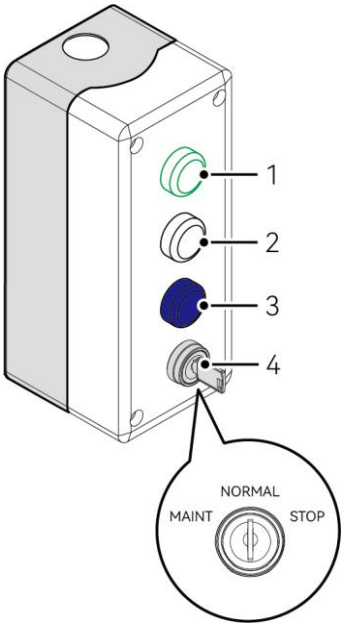

Figure 3-8 Button switch box

Table 3-3 Buttons

No.	Name	Description
1	Button status LED	Bicolor indicator. The button's status determines which color is displayed. ● Green: The door is unlocked. ● Red: The door lock is abnormal. ● Off: The door is locked.
2	ACT	Activation button. After you press this button, robots start to work.
3	RESET	Reset button. After you press this button, the safety interlocking system will be reset.
4	Mode switch	There are three modes: MAINT, NORMAL, and STOP. You can turn the switch to different modes.

Chapter 4 Specifications

Type	Component	Value
VCP (with a VPT module)	Color	Blue/White
	Weight (kg)	2.2
	IP rating	IP54 (independent battery: IP40)
	Battery life (h)	12
	Operating temperature (°C)	-20 to +55 (charging battery: 0 to 45)
	Storage temperature (°C)	-20 to 55
Equipment side (VRT, VST, and VDR)	Dimensions (L × W × H) (mm)	● Receiver: 134.9 × 46.3 × 39 ● Main module: 120 × 75 × 24.7
	Supply voltage (V)	24 V±10%
	Power (W)	6
	HAIPICK trigger range (m)	● Stop distance: 2.5 ● Deceleration distance: 8 (custom: 6 to 15) ● Angle: 360°
	HAIPORT trigger range (m)	● Stop distance: 2.5 ● Deceleration distance: 8 (custom: 6 to 15) ● Angle: 360°
	Operating temperature (°C)	-20 to 55
	Storage temperature (°C)	-20 to 70

Chapter 5 Functions

A VCP functions as a device to detect the presence of individuals. It operates by facilitating communication between the VPT module and the VRT and VST modules on the HAIPICK and HAIPORT sides. This communication allows robots to identify the persons' locations and determine whether they are staying within a safe distance. Consequently, the HAIPICK robots can reduce the speed or come to a halt, while the HAIPORT can stop as well.

- Emergency stop distance for a VCP: 2.5 m
- Deceleration distance for a VCP: 8 m (custom: 6 m to 15 m)
- Protection angle: 360° (complete coverage, not affected by any obstacles in the line of sight)
- Protection action: Deceleration or stop of driving, stop of rotation, stop of picking and placing, and stop of lifting

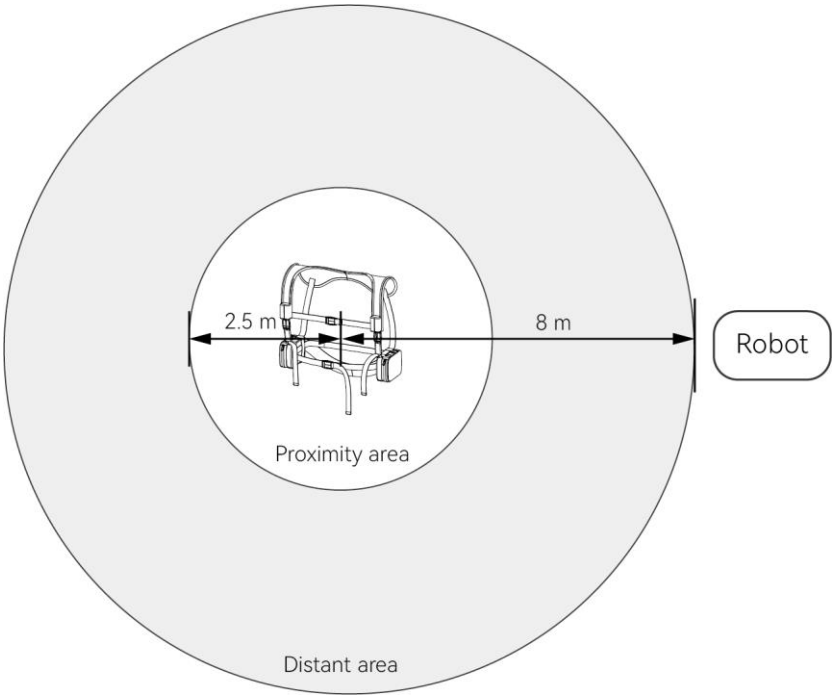

Figure 5-1 Detection range

Chapter 6 Installation

This chapter describes the requirements for installing VCP-related modules on the guard door side. The VDR and VST modules as well as rubber duck antennas need to be installed near a guard door. The planning and deployment process may vary for each project site, resulting in different installation situations. Refer to the following requirements during installation.

- The VDR module needs to be installed inside the electrical cabinet, whereas the rubber duck antenna must be installed on the exterior of the cabinet, within a maximum distance of 5 m from a guard door. Ensure that the antenna remains uncovered and unobstructed by any metal objects.

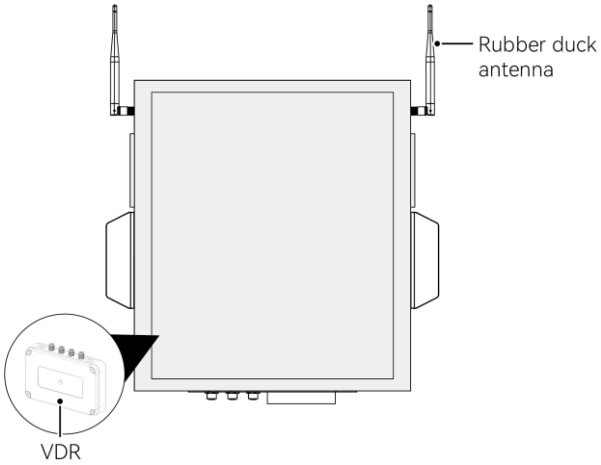

Figure 6-1 Antenna installation

- The VST module is installed near a guard door, no more than 2500 mm apart from the button switch box. Ensure that the module remains uncovered and unobstructed by any metal objects.

Chapter 7 Operation

CAUTION

- Before wearing a VCP, configure the Wi-Fi for the VPT.
- Before entering the site, check the battery SOC of the VPT. It is advised to have a battery SOC of 75% or higher.
- When the battery is low, the VCP indicator blinks red. In this case, personnel must leave the site as soon as possible

7.1 System Interaction

A VCP operates by facilitating communication between the VPT module and the VRT and VST modules on the HAIPICK and HAIPORT sides. This communication allows robots to identify the persons' locations and determine whether they are staying within a safe distance. Consequently, the HAIPICK robots can reduce the speed or come to a halt, while the HAIPORT can stop as well.

The following describes the working process for the system.

Step 1 Activate the VCP.

CAUTION

- Before entering the site, check the battery SOC of the VPT. It is advised to have a battery SOC of 75% or higher.
- The time difference between pressing both VPT buttons cannot exceed 500 ms. Otherwise, the VCP cannot be activated.

1. Wear a VCP, adjust the straps to appropriate positions, and secure the chest and waist buckles.
2. Press the VPT activation buttons on both sides of the VCP at the same time. If the button indicators turn green and emit a beep sound, the VCP is activated successfully. When the green indicator starts to blink, the system enters the working state.

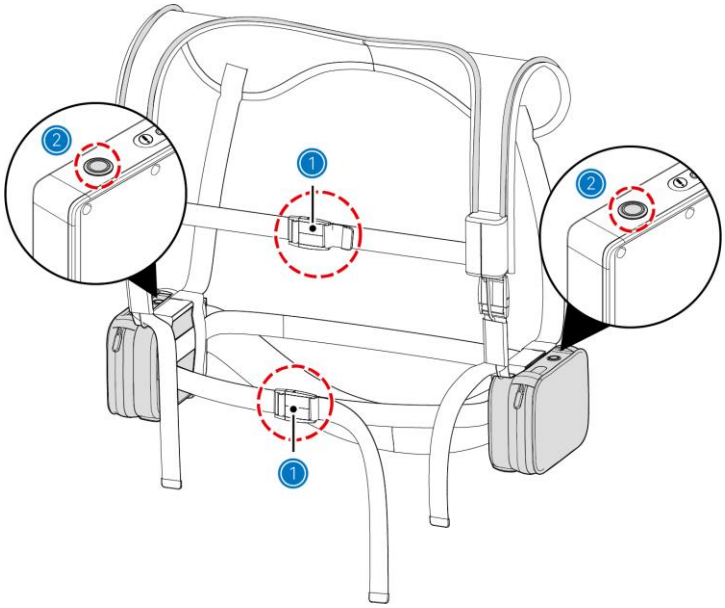

Figure 7-1 Activating the VCP

Step 2 Enter the site.

CAUTION

- Guard doors will open only when the VCP keeps blinking green.
- Do not power off the VCP after entering the site.

1. After the VCP is activated, approach the exterior of the guard door, turn the mode switch to MAINT, and press the ACT button. The button indicator changes to green, and the guard door is unlocked.
2. Remove the key from the button switch box, hold the door handle, and pull the door lock to the right to unlock.
3. Attach the interlocked lock with a warning sign to the door handle, and push open the guard door to enter the site.
4. Close the guard door from the inside, and pull the joystick to the right to lock the door.

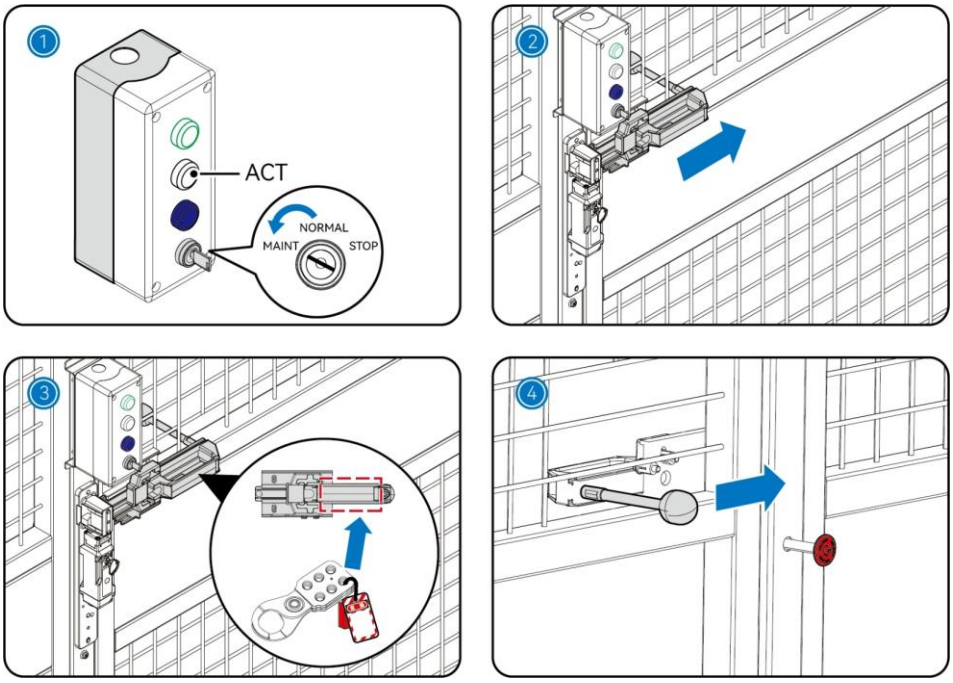

Figure 7-2 Entering the site

Step 3 Leave the site.

1. After completing inspection and maintenance tasks, press the VCP exit request button on the inside of the guard door. The button indicator blinks, and the guard door is unlocked.
2. Pull the joystick to the left to open the door. Then, leave the site, close the door, and remove the interlocked lock and warning sign. If the indicator of the button switch box is off, the door is locked.
3. Insert the key of the mode switch, and turn the switch to NORMAL.
4. Press the RESET button and then the ACT button of the button switch box.

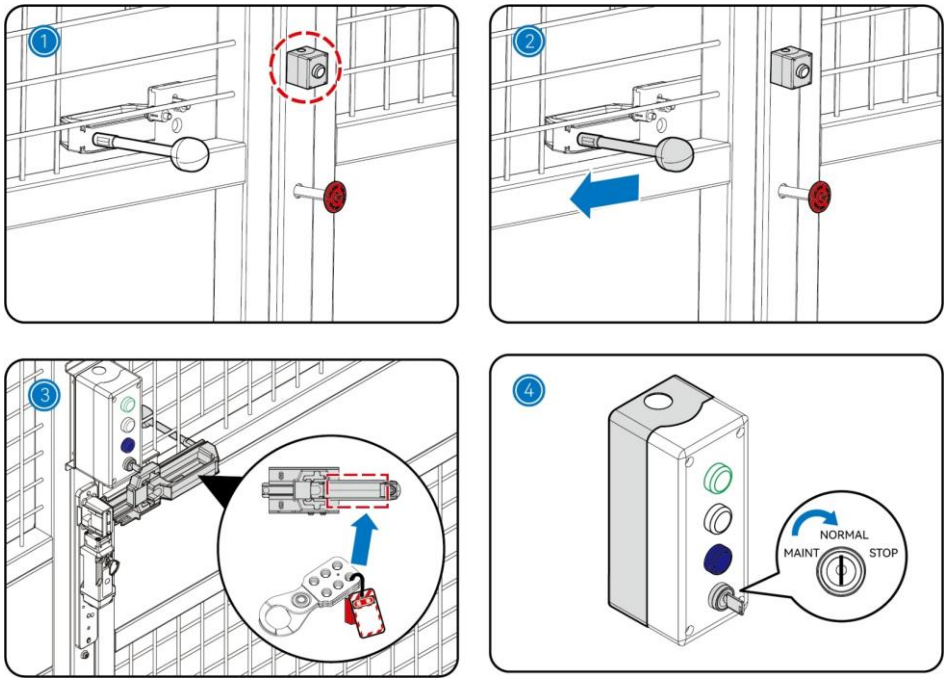

Figure 7-3 Leaving the site

Step 4 Power off the VCP.

CAUTION

The time difference between pressing both buttons cannot exceed 500 ms. Otherwise, the VCP cannot be powered off.

1. Press the VPT activation buttons on both sides of the VCP at the same time. If the button indicators are off, the VCP is powered off successfully.
2. Unfasten the chest and waist buckles, and store the VCP in its designated storage area.

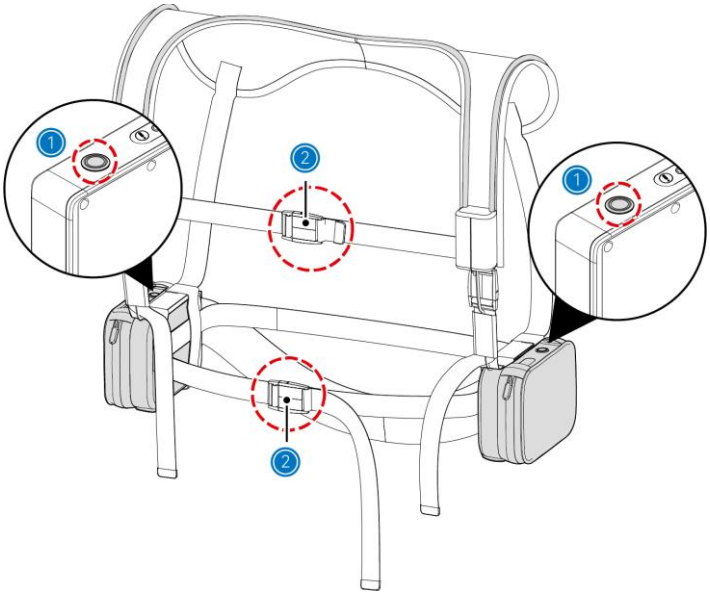

Figure 7-4 Powering off the VCP

TIPS

- If the VCP cannot be powered off due to failure in pressing the buttons at the same time, press each button separately first and then press them both at the same time.
- If the VCP will not be used for a long time, remove the VPT battery and store it properly.

7.2 Battery Charging

If the VCP reports a low battery alarm or if the VCP battery is found to be low after use, charge it promptly.

Environment Requirements

Ambient environment:

- Air pressure (hPa): 1060 to 795

- Altitude (m): -382 to 2000
- Temperature (℃): 0 to 40
- Humidity (RH): 8% to 90%

Procedure

Step 1 Remove the battery.

1. Unzip a side pocket of the VCP.
2. Remove the battery cover, and then remove the battery.

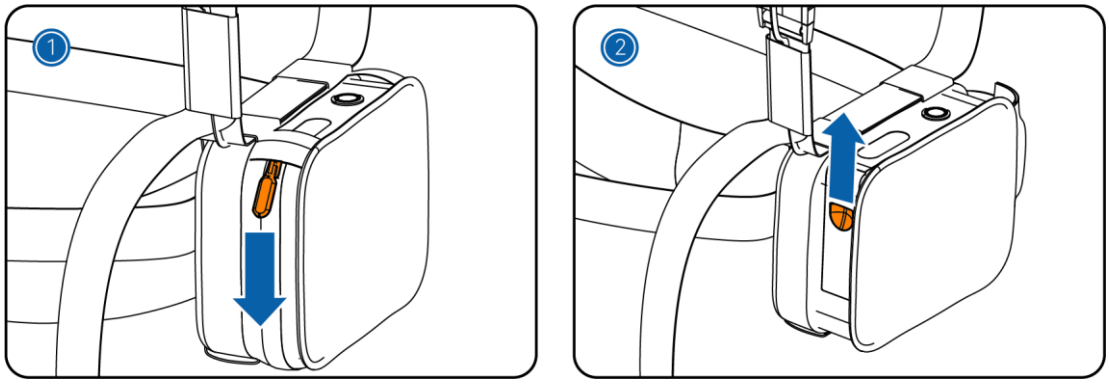

Figure 7-5 Removing the battery

Step 2 Place the new battery, secure the battery cover, and zip the pocket.

Step 3 Insert the old battery to the battery charger in the correct direction, and ensure that the charge indicator displays the appropriate charging status.

Chapter 8 Routine Maintenance

8.1 Regular Cleaning

CAUTION

- Before maintenance, power off the VCP and remove the battery.
- Ensure that the battery cover is closed and the side pockets are zipped.

Check the surface of the VCP for any stain or damage. If the VCP is stained, perform the following steps to clean it. If the VCP is damaged which hinders its functionality, stop using it.

Procedure

Step 1 Wipe the VCP with a soft, clean, non-shedding cloth that is slightly damp.

Step 2 Apply a gentle, non-rinse stain remover onto the stains, wait for 5 minutes, and dry the VCP with a soft, clean cloth.

8.2 Storage

After use, hang the VCP on a hook in the designated storage area by referring to the instructions in the following figure.

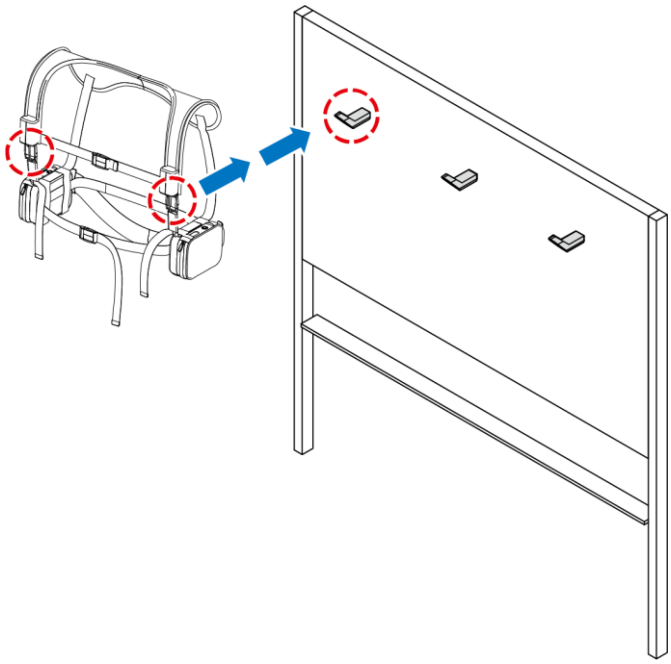

Figure 8-1 VCP storage area

Chapter 9 Troubleshooting

The system may encounter exceptions or faults during daily use. Perform troubleshooting by referring to the solutions in the following table. If the fault persists, contact technical support personnel of HAI ROBOTICS promptly.

Issue Description	Possible Cause	Solution
The buzzer keeps buzzing, and the status LEDs blink red.	The battery is low.	This exception occurs when the battery SOC drops below 30%. In this case, replace the battery or charge it promptly.
Status LEDs are off.	The light source is detached from the light strip.	Check whether the light sources from the light source modules on both sides of the VCP are loosen. If yes, secure them promptly.
	The VPT connection has loose LED connectors.	Check whether the connectors of the LED ports on the sides of the VPT are loosen. If yes, secure them promptly. If no, use a functional VPT and light source cable to identify any potential damage either to the VPT or the external LEDs.
	Light sources are damaged.	Check whether the light sources are damaged. If yes, replace their cables promptly.
	The VPT is damaged internally.	Replace the VPT promptly and contact the technical support personnel of HAI ROBOTICS for inspection and repair.
The intensity of the status LEDs has diminished.	The light strips are not properly inserted at the bottom of the light sources.	Check whether the connections are loosen between the light sources of the light source modules on both sides of the VCP and the status LEDs. If yes, reconnect the light strips to the light sources.
The equipment cannot be activated.	The battery is low or damaged.	● Check whether the battery SOC is higher than 30% based on the SOC indicator. ● Change the battery manually.
	● The activation button is damaged. ● The VPT is damaged internally.	Replace the VPT promptly and contact the technical support personnel of HAI ROBOTICS for inspection and repair.
	Redundant	Check whether the connectors of the communication

Issue Description	Possible Cause	Solution
	communication cables are loosen.	ports are loosen on the sides of the VPT. If yes, secure them promptly.
	/	If the fault persists, use communication ports to connect to the commissioning tool and view the fault information.
The status LEDs blink red.	The VPT is damaged internally.	Replace the VPT promptly and contact the technical support personnel of HAI ROBOTICS for inspection and repair.
	More than two VCPs are working on a site.	Remove excessive VCPs from the site as required.
	The VPT IDs duplicate.	Connect to the commissioning tool, view the fault information, and contact technical support personnel of HAI ROBOTICS to reset the IDs.
The guard door is not open.	The VCP is not activated.	Press both VPT buttons at a time difference of no more than 500 ms.
	The VCP is faulty.	Determine the VCP fault cause by referring to the preceding fault descriptions and adopt a proper solution.
	The VCP ID is not consistent with the warehouse ID.	Check whether the VCP ID is consistent with the warehouse ID. If yes, reactivate the VCP.

Appendix A Regulatory Compliance

North America

United States

This device complies with Part 15 of the FCC Rules. Operation is subject to the following two conditions:

(1) This device may not cause harmful interference, and (2) this device must accept any interference received, including interference that may cause undesired operation.

Note

This equipment has been tested and found to comply with the limits for a Class A digital device, pursuant to Part 15 of the FCC Rules. These limits are designed to provide reasonable protection against harmful interference when the equipment is operated in a commercial environment. This equipment generates, uses, and can radiate radio frequency energy and, if not installed and used in accordance with the instruction manual, may cause harmful interference to radio communications. Operation of this equipment in a residential area is likely to cause harmful interference in which case the user will be required to correct the interference at his own expense.

Warning

Any changes or modifications not expressly approved by the party responsible for compliance could void the user's authority to operate this equipment.

This device and its antenna(s) must not be co-located or operating in conjunction with any other antenna or transmitter.

This device is restricted to indoor use when operated in the 5.15 to 5.25 GHz frequency range.

Important

FCC Radiation Exposure Statement: This equipment complies with FCC radiation exposure limits set forth per 445498 D01 General RF Exposure Guidance v06.

The WIFI module model is RS9116W-DB00-CC1-B2A and is only used in VPTA14 and VPTA1H

This device contains transmitter module FCC ID: XF6-M7DB7 (Wi-Fi 5GHz)

"WARNING!

FCC and IC Radiation Exposure Statement:

This portable equipment with its antenna complies with FCC's and IC's RF radiation exposure limits set forth for an uncontrolled environment. To maintain compliance follow the instructions below:

1. This transmitter must not be co-located or operating in conjunction with any other antenna or

transmitter.

2. Avoid direct contact to the antenna, or keep contact to a minimum while using this equipment.
3. The device has been evaluated to meet general RF exposure requirement,This equipment should be installed and operated with a minumum distance of 25mm between the radiator and your body.
4. To maintain the 25mm separation, this device must be worn with the safety toolbelt that holds the device in its pouch.

Canada

This device complies with Industry Canada license-exempt RSS standard(s). Operation is subject to the following two conditions: (1) this device may not cause interference, and (2) this device must accept any interference, including interference that may cause undesired operation of the device. This equipment should be installed and operated with a minimum distance of 25 mm between the radiator and your body.

Le présent appareil est conforme aux CNR d'Industrie Canada applicables aux appareils radio exempts de licence. L'exploitation est autorisée aux deux conditions suivantes : (1) l'appareil ne doit pas produire de brouillage, et (2) l'utilisateur de l'appareil doit accepter tout brouillage radioélectrique subi, même si le brouillage est susceptible d'en compromettre le fonctionnement. Cet équipement doit être installé et utilisé avec une distance minimale de 25 mm entre le radiateur et votre corps.

The device for the band 5150-5250 MHz is only for indoor usage to reduce potential for harmful interference to co-channel mobile satellite systems;

High power radars are allocated as primary users (meaning they have priority) of 5250-5350 MHz and 5650-5850 MHz and these radars could cause interference and/or damage to LE-LAN devices.

This radio transmitter (IC: 8407A-M7DB7) has been approved by Industry Canada to operate with the integrated antenna. Modifications to the transmitter module without the manufacturer's approval is prohibited.

Important

IC Radiation Exposure Statement:

This equipment complies with IC RSS-102 radiation exposure limits set forth for an uncontrolled environment.

CAN ICES-3 (A)/NMB-3(A)

The WIFI module model is RS9116W-DB00-CC1-B2A and is only used in VPTA14 and VPTA1H

This device contains transmitter module IC: 8407A-M7DB7 (Wi-Fi 5GHz)

HAI ROBOTICS

— The Pioneer in ACR Systems —

www.hairobotics.com

© HAI ROBOTICS Co., Ltd. All rights reserved.