NA41

3.5-8.2GHz Silicon Chip Design Antenna

Description

The NA41 is an ultra-compact chip antenna for UWB 3.5-8.2GHz-band applications. Its size is only 8.0*6.0*1.2mm, which is suitable for compact wearable devices for indoor positioning and navigation applications.

Applications

Indoor Positioning and Navigation using 802.15.4a/z or other UWB standards for low frequency band.

Size Information

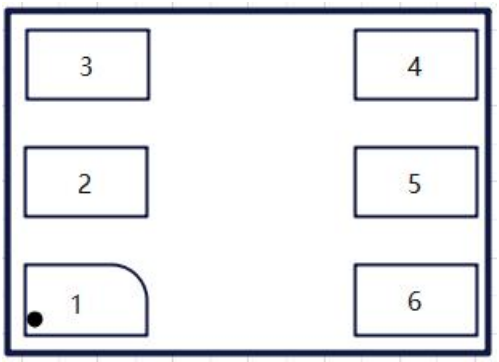

Figure 1. Pin Configuration and Marking

Pin Names And Signal Descriptions

Table1. PIN name and description

Pin	Name	Description
1	NC	NC pad
2	IN	INPUT pad
3	NC	NC pad
4	NC	NC pad
5	NC	NC pad
6	NC	NC pad

Order Information

Table 2. Order Information

Part Number	Temperature	Package	RoHS	Mark	SPQ
NA41	-40°C ~ 85°C	Tape and Reel	Yes	8060	3000 pcs/Reel

Recommend PCB Layout

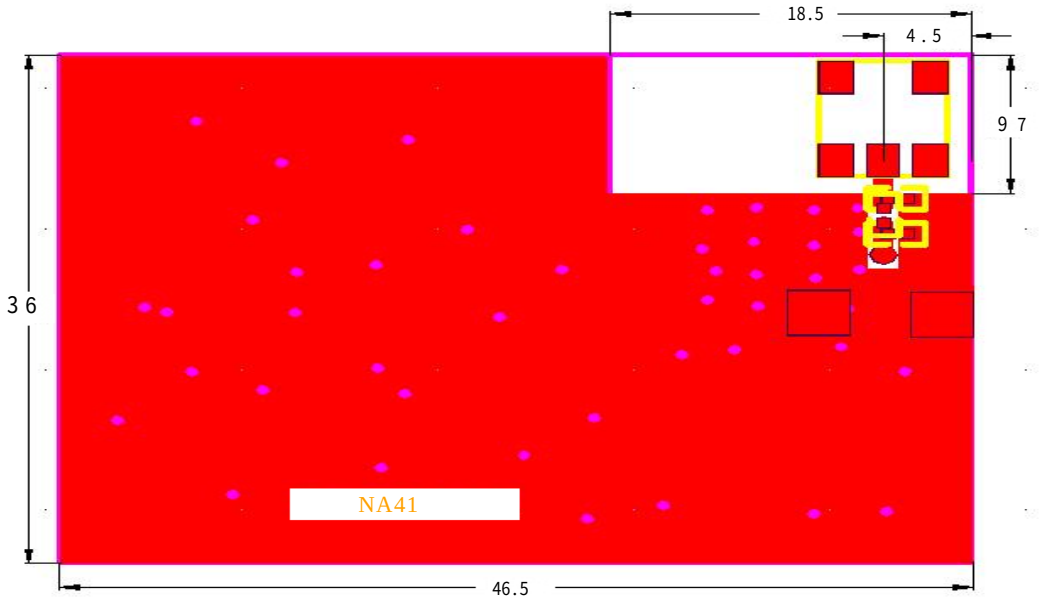

Electrical Characteristics

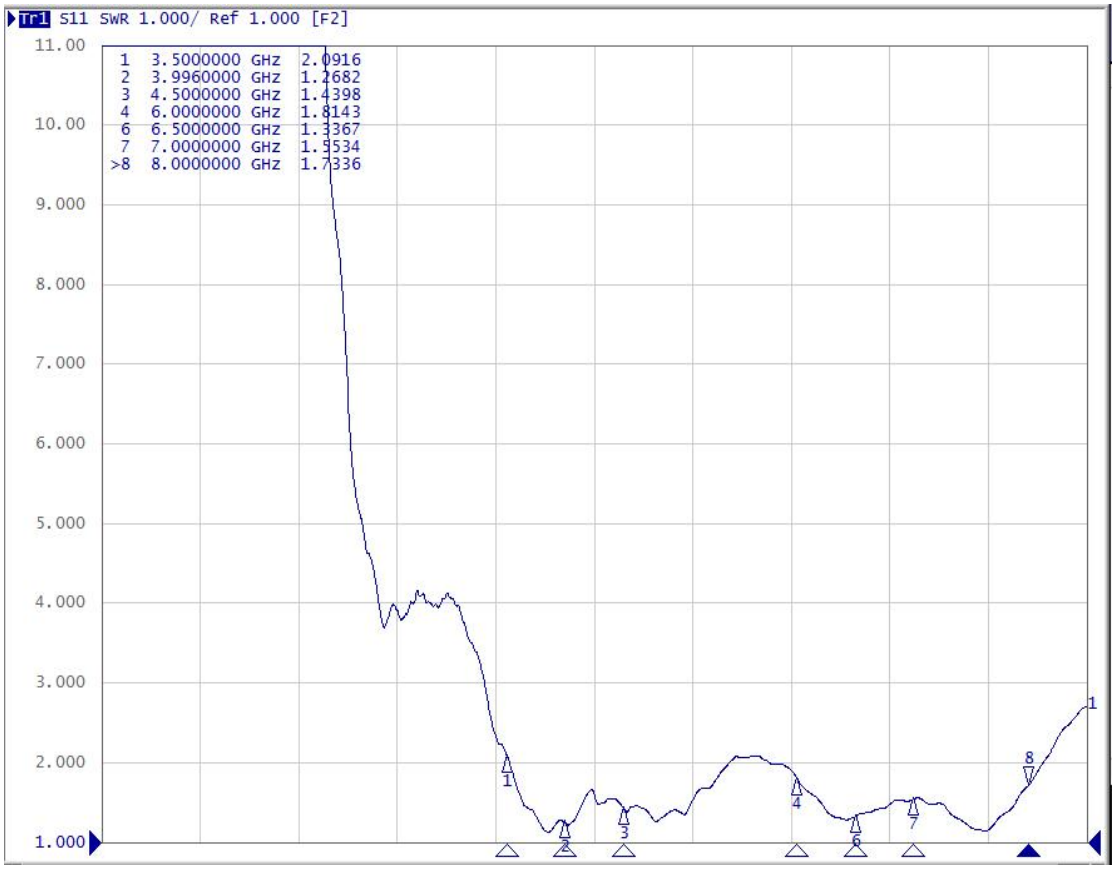

Freq(MHz)	3500	3900	4300	5300	5900	6300	6900	7300	7700	8000	8200
Efficiency(%)	85.0	88.0	79.4	70.8	70.9	90.0	89.0	87.7	81.8	85.6	84.1
Gain(dB)	3	3	2	2.8	3.1	3.6	3.9	4.3	5.1	5.3	5.1

Frequency=3900MHz

Total

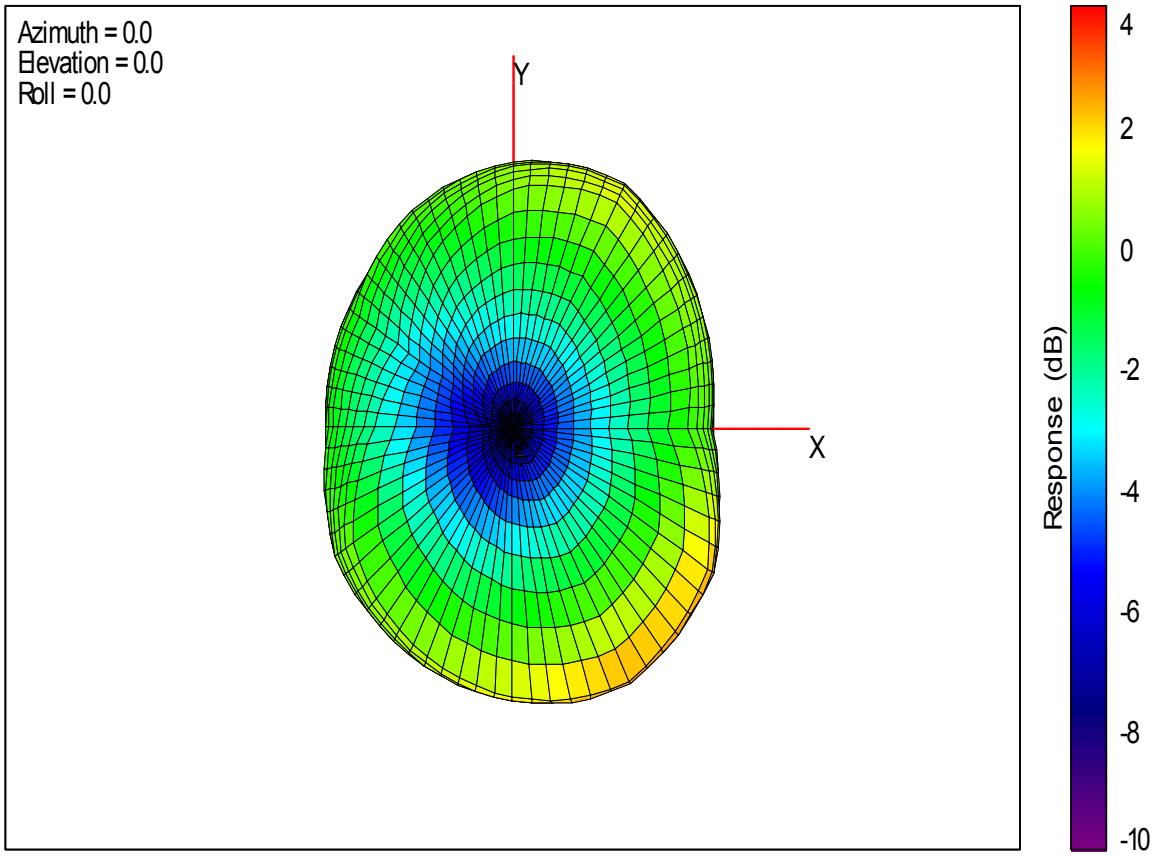

Total

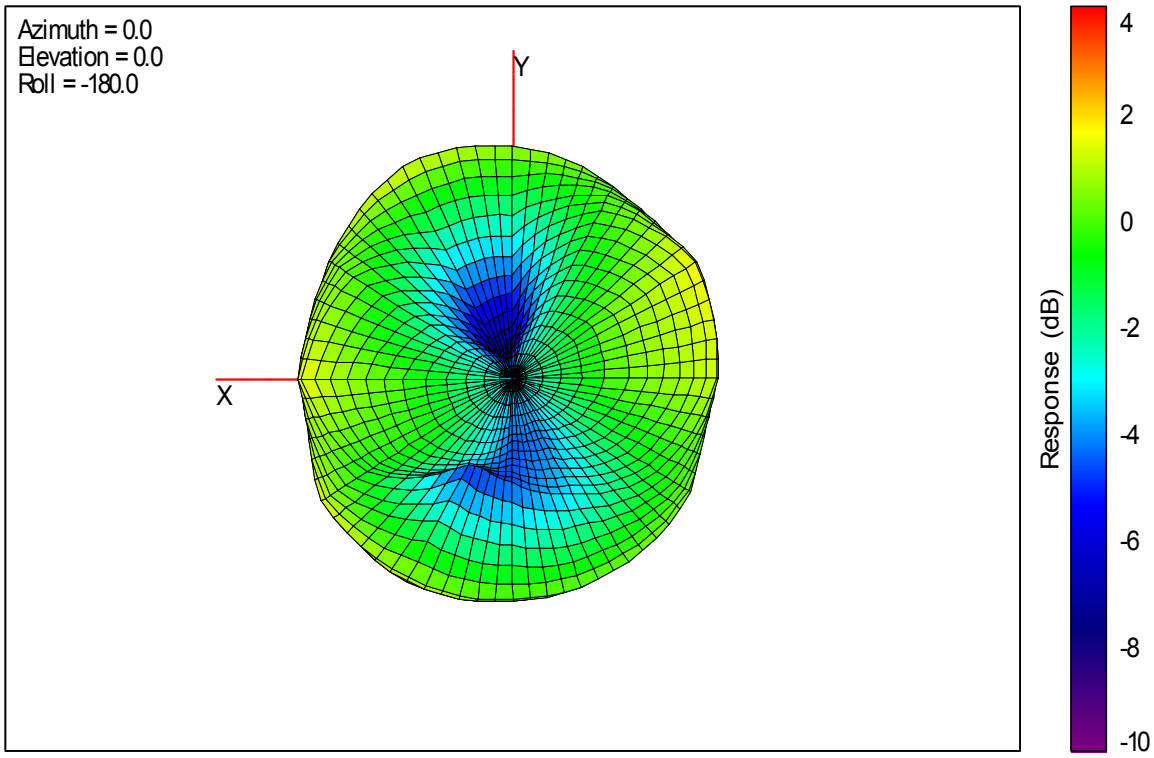

Frequency=6500MHz

Total

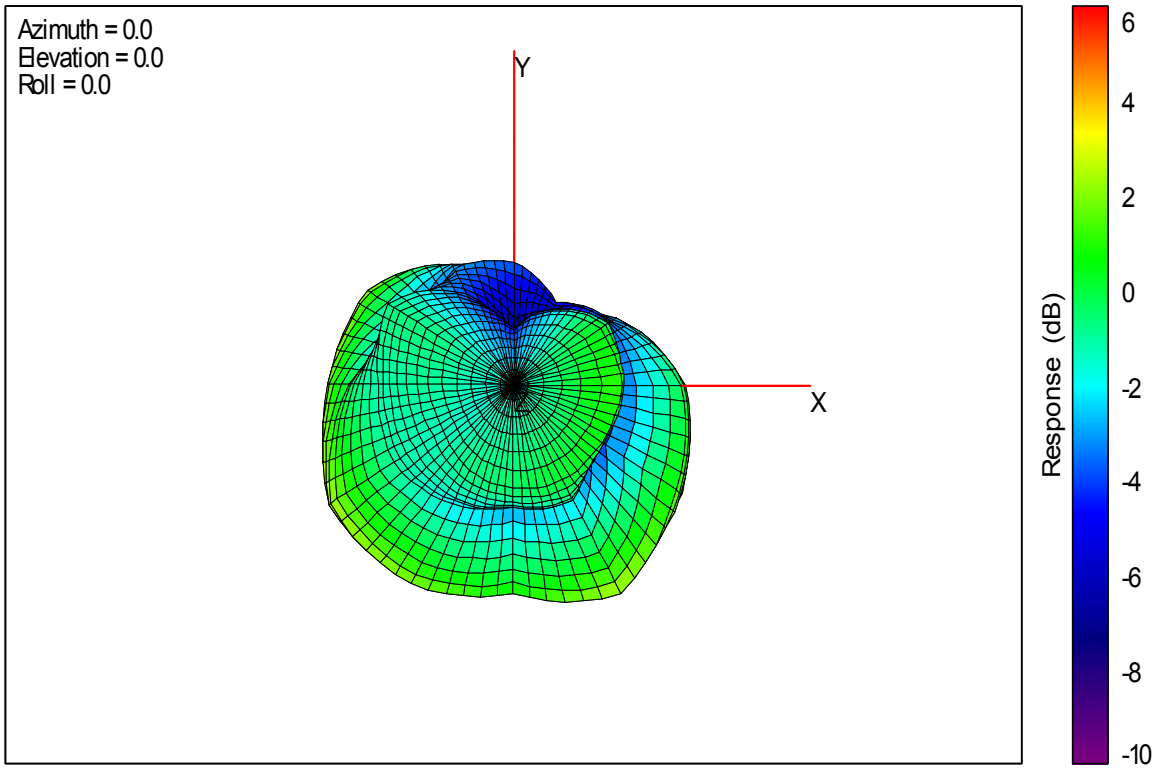

Total

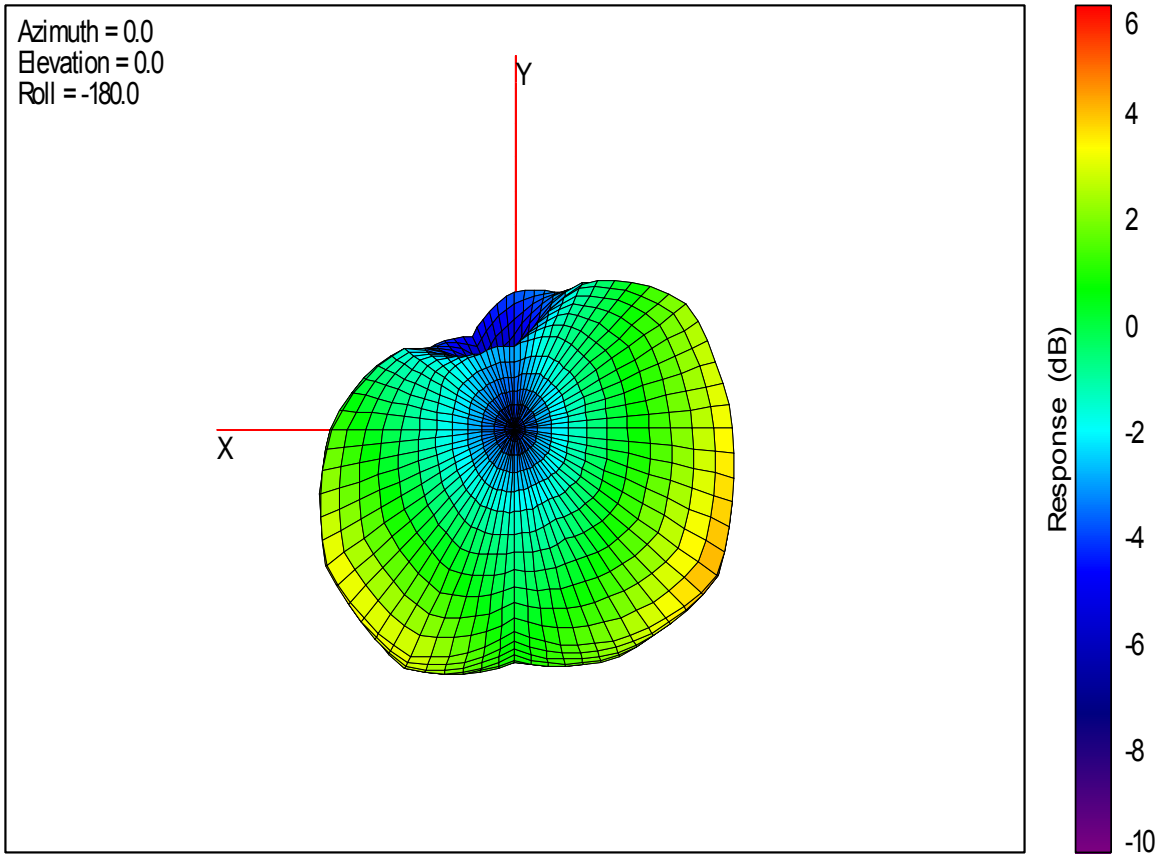

Frequency=7900MHz

Total

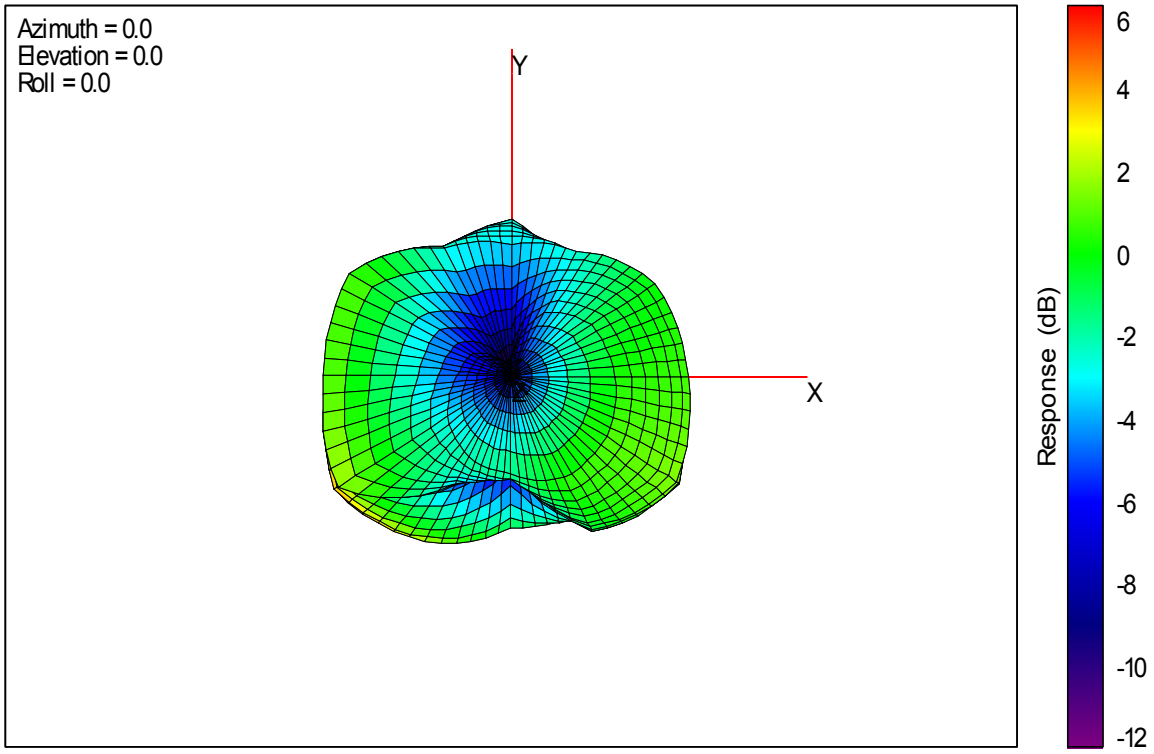

Total

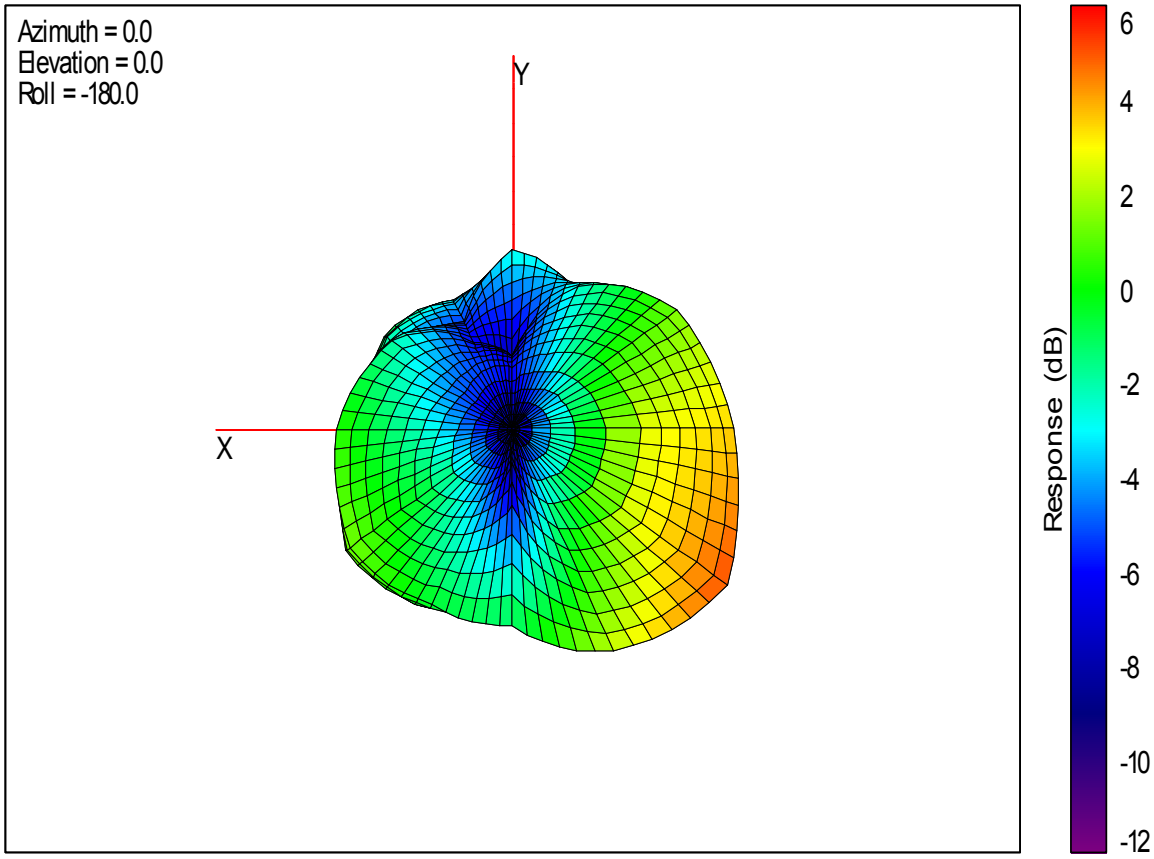

Package Information

➢ **Package Outline Dimensions:**

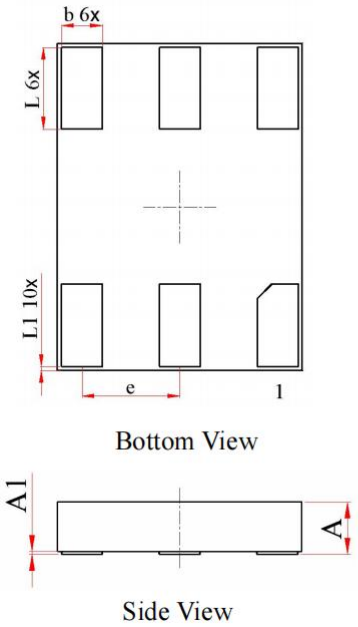

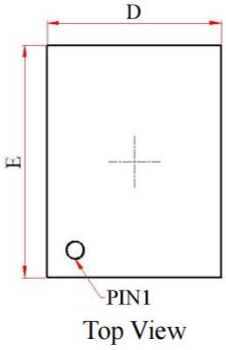

Symbol	Dimension In Millimeters			Dimension In Inches		
	Normal	Min	Max	Normal	Min	Max
A	--	1.170	1.230	--	0.046	0.048
A1	--	--	0.005	--	--	0.000
D	6.000	5.900	6.100	0.236	0.232	0.240
E	8.000	7.900	8.100	0.315	0.311	0.319
b	1.000	0.900	1.100	0.039	0.035	0.043
L	2.000	1.900	2.100	0.079	0.075	0.083
L1	0.100	0.010	0.190	0.004	0.000	0.007
e	2.400 BSC			0.094 BSC		

Recommended Solder Temperature

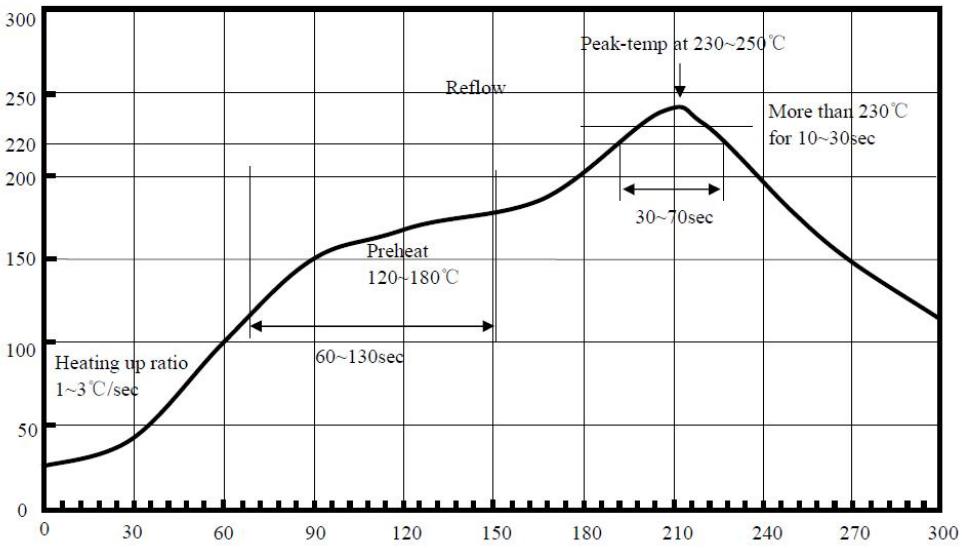

Figure 3. Recommended Solder Temperature

RoHS Compliant

The product does not contain lead, mercury, cadmium, hexavalent chromium, polybrominated biphenyls(PBB) or polybrominated diphenyl ethers(PBDE), and are therefore considered RoHS compliant

Revision History

Document ID	Release Date	Change Record
V1.0	2022.09	Officially released