DONGGUAN KIMCHEN INDUSTRY INTL LIMITED

DONGGUAN KIMCHEN INDUSTRY INTL LIMITED

PRODUCT SPECIFICATION

Shenzhen Weizhichuang Technology Co., Ltd

CUSTOMER: _____

101.0069

CUST P/N: _____

K C P/N: _____

20.5*42*0.08*105P*10TS*10mm

D E S E : _____

2022.6.18

D A T E : _____

A.0

VERSION : _____

东莞市金赞智能科技有限公司

ACCEPTANCE STAMP

PREPARED BY	MERCHANDISER	ENGINEER CHECKED BY	PRODUCTION CHECKDED BY	APPROVED BY
Liu Zhiqiang				

Address:No. 2 Xisha Road,
Shijie Town, Dongguan City
Http://www.jzcoil.com

Tel：86-076986018114 Fax：86-076986015646

FilNo: KC-JZ-09-008

DONGGUAN KIMCHEN INDUSTRY INTL LIMITED

客户料号:

10mm

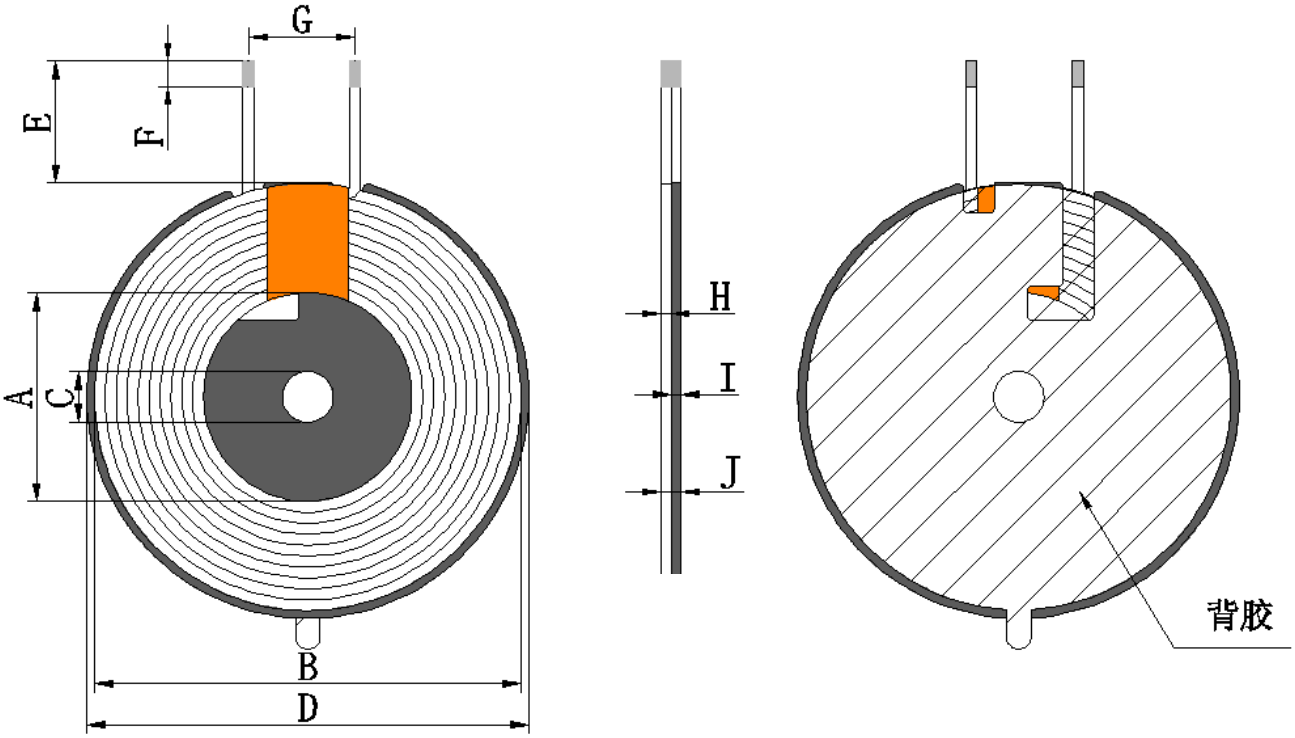

东莞市金赞智能科技有

PREPARED BY	ENGINEER CHECKED BY	PRODUCTION CHECKED BY
Liu Zhiqiang	Liu Zhiqiang	Liu Zhiqiang

Address:No. 2 Xisha Road, Shijie Town, Dongguan City
Tel：86-076986018114
Fax：86-076986015646
Http://www.jzcoil.com

FilNo: KC-JZ-09-008

DONGGUAN KIMCHEN INDUSTRY INTL LIMITED

Specification						CUST P/N			101.0069		
		C	D	E		F					
20.5±0.5	42±1	5.0±0.5	43.5±	10±1		3±1	10±2		1.25max	1.0±0.1	2.8max
			0.5								

Unit: Millimeters (mm)

PS: 1. (E) is the length of the magnetic outer lead; 2. (H) does not include incoming lines; 3. (J) does not include release paper;

Turns	Wire Dia.	Wdg. Type Spred/Close	Wdg.Direction	Intersect Yes/Not	Coil Positive/Anti Paste
10TS	0.08*105P (Silk-Covered Wire)	(Close)	(Anticlockwise)	(Yes)	(Anti/-Paste)

All materials require qualified ROHS standards

东莞市金赞智能科技有限公司

2. (ELECTRICAL CHARACTERISTICS):

TEMPERATURE:25±10℃, RELATIVE HUMIDITY:65±10%

NO.	ITEM	TERMINAL	SPECIFICATION	TEST FREQUENCY	TEST EQUIPMENTS
1	IND	S-F	Coil and magnetic plate: 6.3 uH±10%	100kHz/V	LCZ METER 1062

3. (BILL OF MATERIAIS):

NO.	Material name	Description	Material Code	Vendor code

PREPARED BY	ENGINEER CHECKED BY	PRODUCTION CHECKED BY
Liu Zhiqiang	Liu Zhiqiang	Liu Zhiqiang

Address:No. 2 Xisha Road, Shijie Town, Dongguan City

Tel: 86-076986018114

Fax: 86-076986015646

FilNo: KC-JZ-09-008

DONGGUAN KIMCHEN INDUSTRY INTL LIMITED

Specification				
			：CUST P/N	101.0069
			：KC DESE	20.5*42*0.08*105P*10TS*10mm
1	wire rod	0.08*105Psilk covered wire	SBX-2U-F-0013	ZY
2	ferrite	G43.5*5.0*1.0H(With holes and double groove L-groove)		
3	double-sided tape	42*5.0*0.08H (With holes, with hand tearing)		
4	Goldfinger adhesive tape	8mm	High temperature adhesive tape 8MM	JRM
5	glue	JS-E103(Thickened) White glue (for silk wrapping)	E103W-2	BRF
6	Solder bar	Environmentally friendly lead-free solder strip	Lead free high-temperature tin strip	XC

PREPARED BY	ENGINEER CHECKED BY	PRODUCTION CHECKED BY
Liu Zhiqiang	Liu Zhiqiang	Liu Zhiqiang

Address:No. 2 Xisha Road, Shijie Town, Dongguan City
Tel：86-076986018114 Fax：86-076986015646
Http://www.jzcoil.com