HM11 Bluetooth speaker

Thanks for choosing our product. We hope you will enjoy music,

Security guidance

Before using the speaker, please read our specs clearly and keep it for future reference

1. Stay away from heat, sharp items and direct sunlight.
2. Stay away from open fire.
3. Do not insert any metal objects, avoid short circuit.
4. Don't repair the product by yourself, please contact the authorized manufacturer to repair it.
5. Avoid rain, spray and other liquids.
6. If the product is overheated, damaged or falling into the liquid, stop using it.
7. Use the product according to local standards and regulations.

Built-in battery care

1. Product built-in rechargeable battery. the new battery only needs 2-3 hours for the first time to complete the charge and discharge cycles. Do not make battery fully charged, because overcharging will shorten the life of cycle of the speakers.
2 If you do not use, power might loss a little.
3. products placed in the hot or cold places, which will shorten the life of the product.

Charger care:

1. Please use the standard 5V DC adapter to charge. Use of any other type may damage the product.
2. Charging according to instructions.
3. IMPORTANT: Please refer to the description of the user's manual of the charge status indicator, Some speakers can not be used when charging.

Accessories:

1* HM11 Bluetooth speaker 1* USB charging cable
1* audio cable
1* manua

Integrated battery charging:

This Bluetooth speaker is equipped with an integrated rechargeable lithium battery

1. Insert the charging cable DC 5V, connect the USB to the computer or AC /DC adapter. LED indicator light turn red means speaker is in charge.
2. When the speaker is fully charged, the red indicator will turn off.

Pair of HM11 Bluetoath speakers for mobile phones or other devices

Active Bluetooth speaker pairing mode. The speaker in the shutdown mode,long press the key for 3 seconds, the speaker begins to make a pairing.

Boot into the paired connection ---open the speaker , if the speaker was not previously connected with the phone or other Bluetooth devices it automatically enters to wait for pairing; if the speaker and other Bluetooth devices connected before, when starting up, it will automatically connect the last connection device.

Tips:

Make sure the Bluetooth speaker is in the boot mode and start activating the pairing.

1. Turn on your phone and activate the Bluetooth function.2. Search for Bluetooth devices, H8 will appear.

3. Connect HM11.If you need to pass the password,you can enter "0000", then HM11 will connect to your phone to start using.

Bluetooth function usage:

FCC Warning：

This device complies with Part 15 of the FCC Rules.Operation is subject to the following two conditions: (1) this device may not cause harmful interference, and (2) this device must accept any interference received, including interference that may cause undesired operation.

Changes or modifications not expressly approved by the party responsible for compliance could void the user's authority to operate the equipment.

NOTE: This equipment has been tested and found to comply with the limits for a Class B digital device, pursuant to Part 15 of the FCC Rules.These limits are designed to provide reasonable protection against harmful interference in a residential installation.This equipment generates, uses and can radiate radio frequency energy and, if not installed and used in accordance with the instructions, may cause harmful interference to radio communications. However, there is no guarantee that interference will not occur in a particular installation.

If this equipment does cause harmful interference to radio or television reception which can be determined by turning the equipment off and on, the user is encouraged to try to correct the interference by one or more of the following measures:

--Reorient or relocate the receiving antenna.
-- Increase the separation between the equipment and receiver
--Connect the equipment into an outlet on a circuit different from that to which the receiver is connected.
--Consult the dealer or an experienced radio/TV technician for help

NOTE: This device and its antenna(s) must not be co-located or operation in conjunction with any other antenna or transmitter.

RF exposure:

The device has been evaluated to meet general RF exposure requirement. The device can be used in portable exposure condition without restriction.

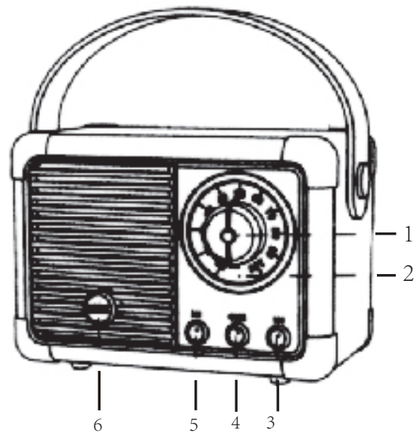

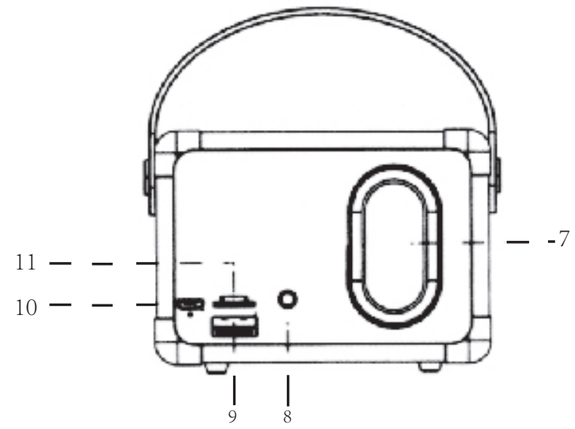

1. Volume adjust
2. Volume dial
3. Next
4. Play/Pause Mode
5. Previcus
6. Bluetooth indicate light
7. The passive unit AUX
8. Audio port USB flash
9. disk
10. Charging port
11 TF card read

1.Turn on/off (Pic 4), long press 4 seconds. Bluetooth indicate light(Pic 6) flicker and into bluctooth match mode, turn off long press 4 seconds too

Play/Pause: short press will alternate play and pause. Double press will change mode

When receive calling, short press to answer call, double press will refuse the call

Double press will call the latest calling person when speaker on normal model 2. Previous music(Pic 5) short press
3. Next music(Pic 3) short press
4. Volume adjust(Pic 1) rotate can adjust volume

AUX external audio:

AUX audio port (Pic 8)

Insert audio wire after turn on the speaker, will into AUX mcde autommatic USB read(Pic 9): can insert USB to listen music

Malfunctlon	Reason	Solution
Can not switch to Bluetooth mode	No electricity	Charging
Can not pait with Bluetooth	The speaker has been paired with another device and has not entered the pairing mode	Close other matching equipment, Re-search”HM11"for pairing