USER MANUAL

BTB6L

BLUETOOTH® • ALL-TERRAIN SOUND SYSTEM
FEATURING 6.5" MARINE SPEAKERS AND 1" TWEETERS
AND MULTICOLOR RGB ILLUMINATION

V:1X

SOUND STORM LABORATORIES
3451 Lunar Court, Oxnard CA 93030

TECHNICAL ASSISTANCE
www.soundstormlab.com/support
805-751-4855 Customer Service

BTB6L
BLUETOOTH® • ALL-TERRAIN SOUND SYSTEM

0225

iThe Bluetooth® word mark and logos are registered trademarks owned by Bluetooth SIG, Inc. and any use of such marks by Sound Storm Laboratories is under license. Other trademarks and trade names are those of their respective owners.

1

Thank you for purchasing this

SSL®

BTB6L All-Terrain Sound System

Please read through these instructions carefully so you will know how to operate your model properly.

After you have finished reading the instructions, keep this document in a safe place for future reference.

THIS PACKAGE CONTAINS

1x All-terrain sound system (with a 12V power port plug)

1x 12V power port plug adapter

1x 3.5mm audio cable

2x Mounting straps + 2x Nylon zip ties

1x Remote control + 1x Keychain

1x User manual + 1x Warranty card

IMPORTANT

Please enter below the Serial No. which is located on the exterior of the product. Retain this information for future reference.

Model _____

Serial No. _____

Date of Purchase _____

2 Before You Start

Read and understand all instructions before you use your product. If you do not follow the instructions in this manual, we are not responsible for injury or damage resulting from improper handling. This will also void the warranty.

Important Safety Precautions

- **Be sure to observe the following guidelines:**
  - Do not increase speaker volume so high that you cannot hear what is around you.
  - Use caution or temporarily discontinue use in potentially hazardous situations.
- Do not make any adjustment on the product when driving or in other situations where distractions can be hazardous. Responsible and safe driving is your primary responsibility when operating a vehicle.
- Start volume at a low setting then gradually increase the volume until you can hear it comfortably, without sound distortion and ear discomfort.
- In the event of smoke, strange noise or odor emitted from the product or any other abnormal operational signs appearing on the product, disconnect the product from the power supply. Discontinue use and contact your dealer or our technical support. Using the product in this condition may result in permanent damage to the system.

Installation Precautions

- **WARNING: Always consult a professional installer.**
- Installation must be performed by a professional. Contact our technical support for any installation questions.
- Observe the safety and operating instructions of the devices which are connected to the product.
- Only use attachments/accessories specified by the manufacturer for installation.
- Do not modify this product, as this affects the safety of the product and creates a risk of injury.
- Before installation, disconnect the negative terminal of the vehicle battery to prevent damage to the product, fire, and/or possible injury.

Care for Your Product

- **DO NOT** clean the product in hot weather (e.g. hot sunlight).
- **DO NOT** use abrasive or highly alkaline cleaner on the product.
- **DO NOT** use gasoline, acetone, carbon tetrachloride or other aggressive chemical solutions on the product.
- **DO NOT** scrape the product with razor blade or other sharp instrument.
- This product is weatherproof. However, never submerge the product in water.
- Wash the product with lukewarm water and mild soap or detergent, using a clean sponge or soft cloth. Rinse well with clean water.

3 Getting to Know Your Product

Introduction

The product is a Bluetooth speaker system which is ideal for installation in a ATV (All Terrain Vehicle) or UTV (Utility Vehicle). You can stream audio from a mobile phone to this product via Bluetooth. You can also play music from an external device (e.g. a mobile phone or MP3 player) via 3.5 mm audio input.

The product is integrated with RGB LED lights which are controlled using the supplied remote control.

This product is shockproof and weatherproof. This product is operated with 12 VDC vehicle power supply. Never connect this product to any other voltage supply (e.g. 24 VDC).

Please read this manual carefully so you will know how to operate your product properly. After you have finished reading this manual, store it in a safe place for future reference.

Product Overview

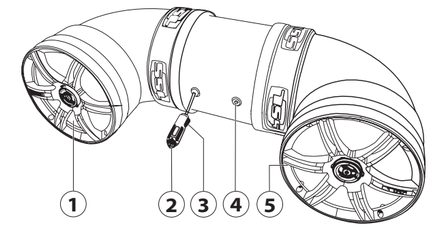

1 Speaker
2 12V power port plug with 10A fuse
3 Power LED indicator
4 3.5mm audio input
5 Speaker

4 Mounting

Mounting on ATV or UTV

⚠ Always consult an expert when in doubt about the installation.

Use only the supplied accessory for mounting. Using other mounting methods may void the warranty.

To ensure safety of the mounted sound system, always check the mounting conditions (e.g. mounting straps) of the sound system before each vehicle ride.

1. Using the two supplied mounting straps and zip ties, secure the sound system on the rails or roll bars of your vehicle, as shown in the figure below. Make sure the sound system is securely attached to your vehicle.

→ No special tool is required when mounting the sound system on ATV or UTV.
The illustration is for reference only. Your vehicle may vary.

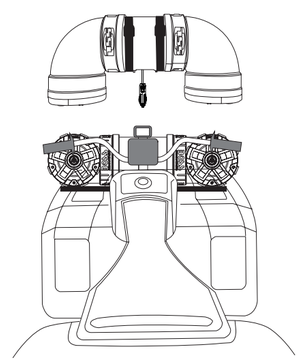

5 Power Connection

Option 1: Using Power Port

If your vehicle has a 12V power port, directly connect the sound system to your vehicle for power connection.

1. Insert the 12V power port plug of the sound system into your vehicle power port. When the power supply is connected, the power LED indicator illuminates on the power port plug.
   Note: To avoid battery drain, unplug the power port cable after each use (if the port power is not switched off with the ignition key).

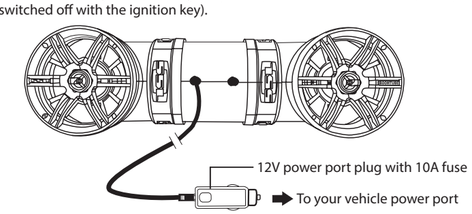

Option 2: Using Power Port Plug Adapter

If your vehicle dose not have a 12V power port, use the supplied power port plug adapter for connection to your vehicle battery.

Important:

- To avoid short circuits and any resulting damage to the sound system, the negative terminal of the vehicle's battery must be disconnected first.

1. Connect the black/ground wire of the power port plug adapter to the vehicle's metal frame or to the negative battery terminal. Fasten the ground wire with a bolt/screw on the metal surface. Make sure the metal surface is clean with no paint, rust or dirt.
2. Connect the red wire of the power port plug adapter to the positive battery terminal.
   If needed, use extension wires of 12-14 gauge for connection to the battery. **Remember to install a 15A in-line fuse (not included) and an on-off switch (not included)**. An on/off switch is not needed if you unplug the power port cable after each use or if the vehicle power port is turned off with the ignition key. Refer to the illustration.
3. Insert the power port plug of the sound system into the power port plug adapter.
   When the power supply is connected, the power LED indicator illuminates on the power port plug.

6 Power Connection

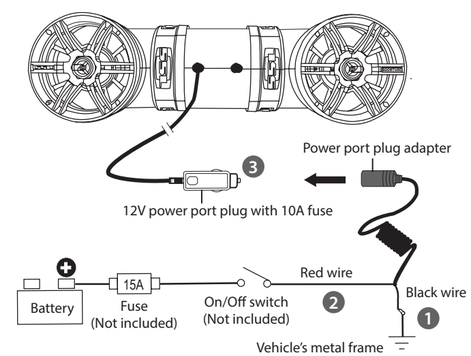

Option 3: Direct connection to vehicle battery

Important:

- To avoid short circuits and any resulting damage to the sound system, the negative terminal of the vehicle's battery must be disconnected first.

1. Remove the plug from the supplied power port plug cable.
2. Connect the power port plug's negative wire to the vehicle's metal frame or to the negative battery terminal, and the power port plug's positive wire to the positive battery terminal.
   - To prevent electrical damage, you must install **1) a 15A fuse (not included) and 2) an on/off switch (not included) to be in line with the power wire which connects to the positive battery terminal**.
   - Fasten the ground wire with a bolt/screw on the metal surface. Make sure the metal surface is clean with no paint, rust or dirt.

Note:

To avoid current draw when the sound system is not used, disconnect the sound system from the battery by unplugging the power port cable or using the inline on/off switch (not included).

7 Bluetooth

Before you can stream music from your mobile device (iOS device or Android device) to this sound system through Bluetooth, pair the sound system with your mobile device.

1. Make sure the audio cable is not connected to the sound system. Then connect to power supply.
   The power LED indicator illuminates on the power port plug, and the sound system will automatically enter pairing mode.
2. On your mobile device, enable Bluetooth function and select the device name ("SSL BTB6L") to pair the sound system with the mobile device. If prompted for password, input "0000".
   Note: Only one device can be paired at a time.
3. When successfully paired/connected, confirmation tone can be heard. Play audio on your mobile device, and audio will be streamed to the sound system. Use the volume control on the connected device to adjust volume.
   After pairing, the sound system will be automatically connected to your mobile device each time the two are turned on. To change Bluetooth source, disconnect the current Bluetooth connection then manually connect another device through your mobile device.

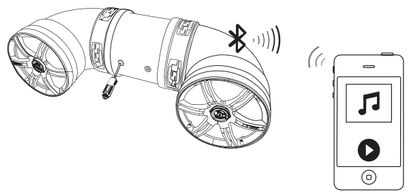

To maximize audio performance, set the volume of the connected device to a minimum of 75%. Ideally, on the highest volume setting you can get without distortion.

Operating the sound system consumes the vehicle battery. To avoid battery exhaustion, be sure to run the vehicle engine when operating the sound system.

Operational range can be reduced by any obstacle between the sound system and the device.

If the connected device is out of the effective range from the sound system, the device will be automatically disconnected. The device will be automatically re-connected if it is back to the operational range within three minutes.

8 AUX

You can listen to an external audio device (e.g. MP3 player or a mobile phone) through this sound system.

1. Connect the 3.5mm audio input from the sound system to the audio output jack on your mobile phone, using the following audio cable.
   - For a mobile phone with 3.5mm headphone jack, use the supplied 3.5mm audio cable.
   - For a mobile phone with USB-C port, use USB-C to 3.5mm cable (not included).
   - For an iPhone with lightning connector, use lightning to 3.5mm cable (not included).

   If the sound system is currently connected to a mobile device through Bluetooth, Bluetooth connection will be automatically disconnected.
2. Select and play audio files on your audio device. Audio from the connected device will be played on this sound system.
   Use the controls on the connected device to control play (e.g. volume adjustment).

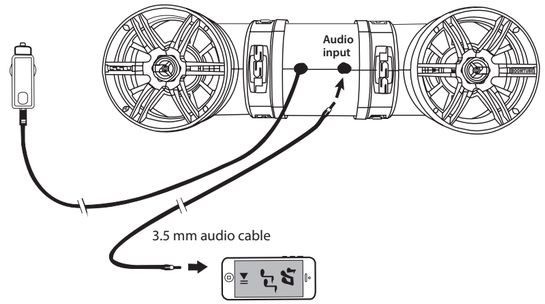

To maximize audio performance, set the volume of the connected device to a minimum of 75%. Ideally, on the highest volume setting you can get without distortion.

To resume Bluetooth connection, you must disconnect the audio cable from the sound system.

Operating the sound system consumes the vehicle battery. To avoid battery exhaustion, be sure to run the vehicle engine when operating the sound system.

9 Fuse Replacement

Fuse replacement of the vehicle power port plug

If the power LED indicator on the power port plug does not illuminate, this indicates the fuse inside the power port plug is blown. Replace the blown fuse with a new 10A AGC fuse (glass cartridge type).

1. Locate the screw cap on the front end of the power port plug. Turn counterclockwise the screw cap to open then access the fuse inside.
2. Replace with a new fuse (not included). Then replace the power port plug while ensuring the contact head sticks out.

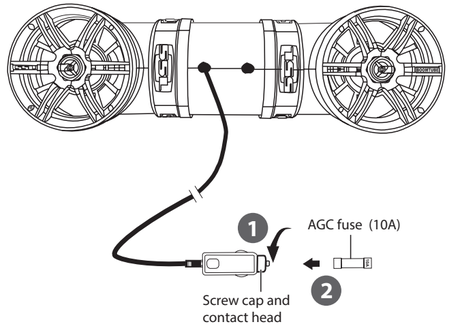

10 Lighting Control

The sound system comes with a remote control. You can use the remote control to control the RGB LED lights which are integrated with the sound system.
The remote control ranges up to 25 feet (line of sight). Do not obstruct the remote control with metal.

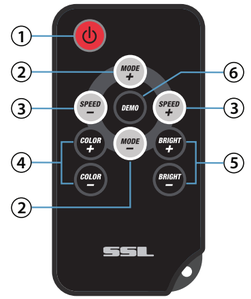

1	⏻	Press to turn RGB LED lights on or off.
2	**MODE +/-**	Switch from static to dynamic illumination and select a dynamic illumination pattern.
3	**SPEED +/-**	For dynamic illumination, select a dynamic illumination speed.
4	**COLOR +/-**	Switch from dynamic to static illumination and select an illumination color.
5	**BRIGHT +/-**	For static illumination, change the illumination intensity.
6	**DEMO**	Cycle red, green and blue illumination.

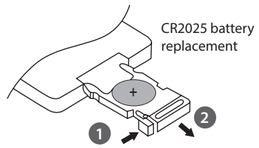

Important notes on battery

- Observe correct polarity while inserting the battery. Replace only with the same type or equivalent type.
- Do not leave the battery under direct sunlight. This may cause fire, explosion or excessive heat.
- Remove the battery from the remote control if not used for a long period of time.
- The remote control contains a coin/button type battery, which is a choke hazard. Keep the battery out of reach of children at all times! If swallowed, the battery can cause serious injury or death.

11 Troubleshooting

If you have problems using this product, check the following points before you request service. If you still have a problem, contact our technical support.

Problem	Solution
Constant beeping.	If the voltage runs below 8.5V or above 18.5V, the sound system will keep beeping and stop working to prevent battery depletion or voltage-surge damage.
No power.	Power connection is not made. See the section "Power Connection" for details.
	The ACC switch of the vehicle is not on. Turn the ACC switch on.
	The fuse inside the power port plug is blown. Replace the fuse.
No sound.	Check the connected device for volume level or playback status (e.g. pause or stop).
Cannot connect through Bluetooth.	Make sure the audio cable is not connected to the sound system.
	Bluetooth function on the device is disabled. Refer to the device's user manual on how to enable Bluetooth function.
	Make sure the device is within range.
	The sound system is already connected with another Bluetooth device. Disconnect the current Bluetooth connection.
	Bluetooth has been disconnected for more than three minutes, manually reconnect Bluetooth through your mobile device.
Audio quality from Bluetooth connection is poor.	Move the device closer to the sound system or remove obstacles or sources of interference that are affecting Bluetooth reception.
No response.	Power glitch or interference. Disconnect power for ten seconds then reconnect power.

Care of the Environment

Do not throw away the product and battery with normal household waste at the end of its life. Follow your local laws if/when disposing of electronic products and batteries. By doing this, you help preserve the environment.

12 Specifications

Bluetooth
Bluetooth version ..... 5.0 / EDR
Bluetooth profile A2DP
Bluetooth frequency ..... 2402 - 2480 MHz
Transmission distance ..... up to 33 ft /10 m (line of sight)

Speakers
Dimensions ..... 6.5" / 165.1mm
Cone type ..... PP carbon + rubber surround
Tweeter size ..... 1" PEI soft dome

Amplifier
Input impedance ..... 10 kΩ
Frequency response ..... 45 Hz - 22 kHz

General
Input voltage/current ..... 12 VDC (allowable 10 - 16 VDC)
Current draw ..... Max. 10 A
Current draw when powered off ..... 60 mA
Fuse ..... 10 A AGC type
Weight ..... 10 lbs / 4.54 kg

Dimensions drawings

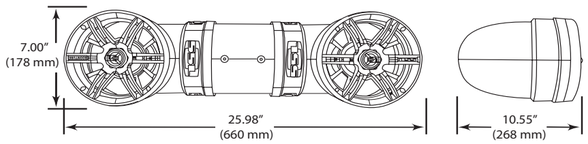

Specifications are subject to change without notice.

FCC Statement

This equipment has been tested and found to comply with the limits for a Class B digital device, pursuant to part 15 of the FCC Rules. These limits are designed to provide reasonable protection against harmful interference in a residential installation. This equipment generates, uses and can radiate radio frequency energy and, if not installed and used in accordance with the instructions, may cause harmful interference to radio communications. However, there is no guarantee that interference will not occur in a particular installation. If this equipment does cause harmful interference to radio or television reception, which can be determined by turning the equipment off and on, the user is encouraged to try to correct the interference by one or more of the following measures:

- Reorient or relocate the receiving antenna.
- Increase the separation between the equipment and receiver.
- Connect the equipment into an outlet on a circuit different from that to which the receiver is connected.
- Consult the dealer or an experienced radio/TV technician for help.

Caution: Any changes or modifications to this device not explicitly approved by manufacturer could void your authority to operate this equipment.

This device complies with part 15 of the FCC Rules. Operation is subject to the following two conditions: (1) This device may not cause harmful interference, and (2) this device must accept any interference received, including interference that may cause undesired operation.

RF Exposure Information

The device has been evaluated to meet general RF exposure requirement. The device can be used in portable exposure condition without restriction.