Electric Scooter
【User Manual】

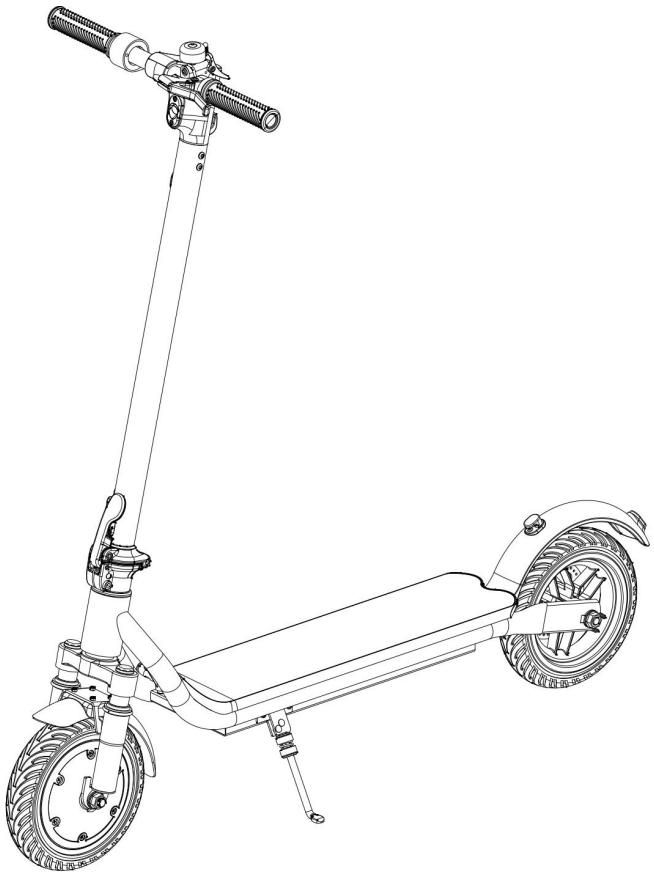

Thanks for your choice
Please read this manual before using this product.
Made In P.R.C.

CONTENTS

1. Product and parts 01

2. Display screen instruction.....02

3. App Setup.....02

4. Charger Connection..... 04

5. Assembly and Fold and unfold method..... 05

6. Handle assembly method.....06

7. Fold device gap adjust instruction.....06

8. How to drive.....07

9. Safety instructions..... 08

10. Daily maintenance and repair..... 11

11. Specifications..... 12

1. Product and parts

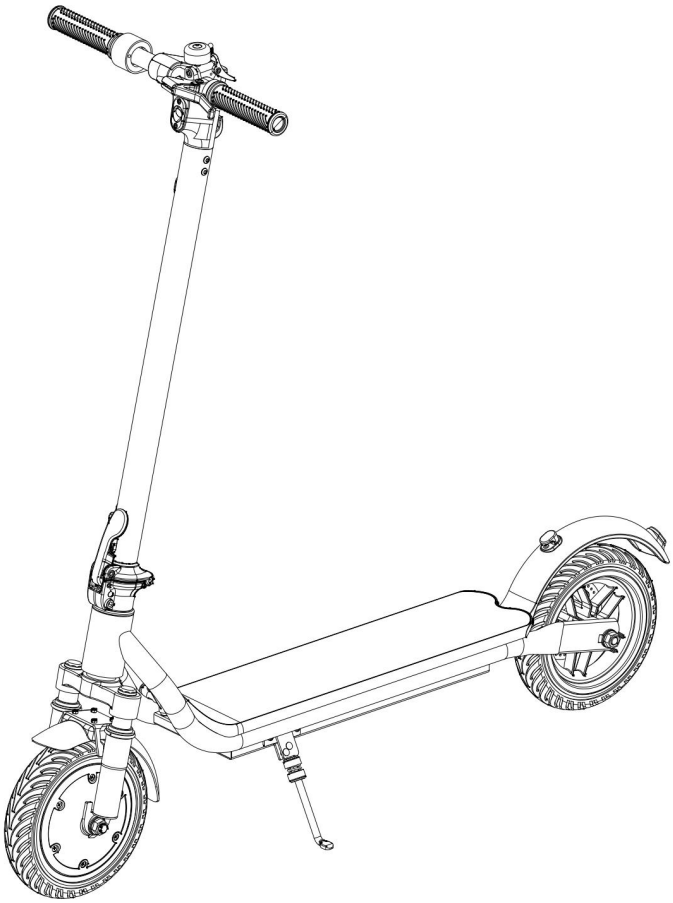

User Manual

Screw x 4

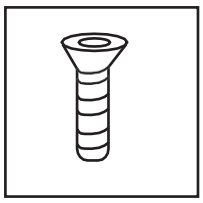

Socket Head Wrench x 5

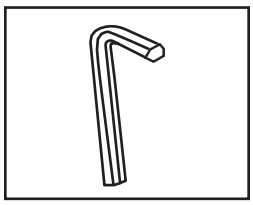

Charging Adapter

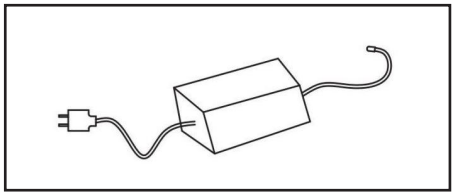

2. Display screen instruction

Please read operation instruction carefully for better operation

Appearance

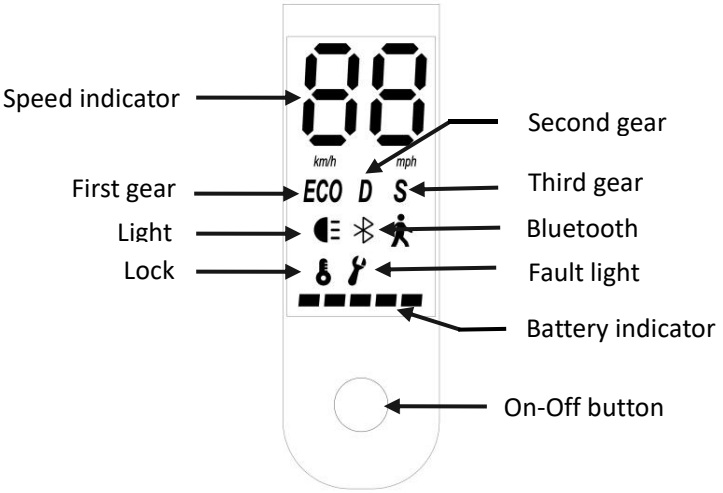

1. To turn the scooter on, long press the On-Off button over 3 seconds, to turn it off, press the On/Off button over 3 seconds.
2. Once turned on, quickly press the On-Off button once switch the speed mode.
   When the " " is displayed, you are in pedestrian mode while front lights will flash-max speed:6 km/h,
   When the "ECO" is displayed, you are in second gear-max speed: 12 km/h,
   when the "D" is displayed, you are in third gear-max speed: 20 km/h,
   When the S is displayed, you are in fourth gear-max speed: 25 km/h.
3. Once turned on, quickly press the On-Off button twice to turn on and off the front light.
4. Once turned on, quickly press the On-Off button three times to switch the speed from km/h to mph
5. Once turned on, quickly press the On-Off button four times to turn on and off the cruse cruise mode
6. Once turned on, quickly press the On-Off button five times to switch the start mode from electronic riding mode to sliding riding , and operate again to restore the default Settings.

7.When you connect the APP indicated in the manual, you can lock the scooter through your APP, when it locked, the LOCK program will on

8.If the fault light is on, it indicates that your scooter has a fault. You can check the specific fault cause through the link APP

3. App Setup

Check and interact with your Scooter through the app “X-Scooter”

Download X-Scooter V2.0 apk/app

Available for download on:

GET IT ON Google Play

1. The Android system must be 4.4 or above
2. Search on Google Play for the App
3. Download and install the App.

Download on the App Store

1. The iOS system must be 12.1 or higher
2. Search the App for App
3. Download and install the App.

1. Turn on the scooter. A flashing Bluetooth icon indicates that the scooter is waiting for a connection. Start the application and click on “Search for device” to connect to the scooter that will emit an acoustic signal when connected. The Bluetooth icon will stop flashing and remain lit.

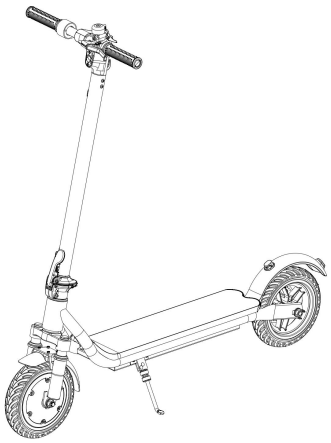

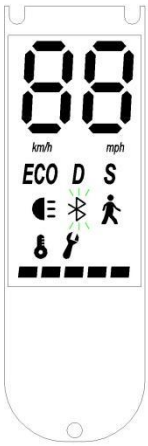

1. Now you can start using the scooter, check the status with the App and interact with its multiple functions.Operation App
2. Operation App

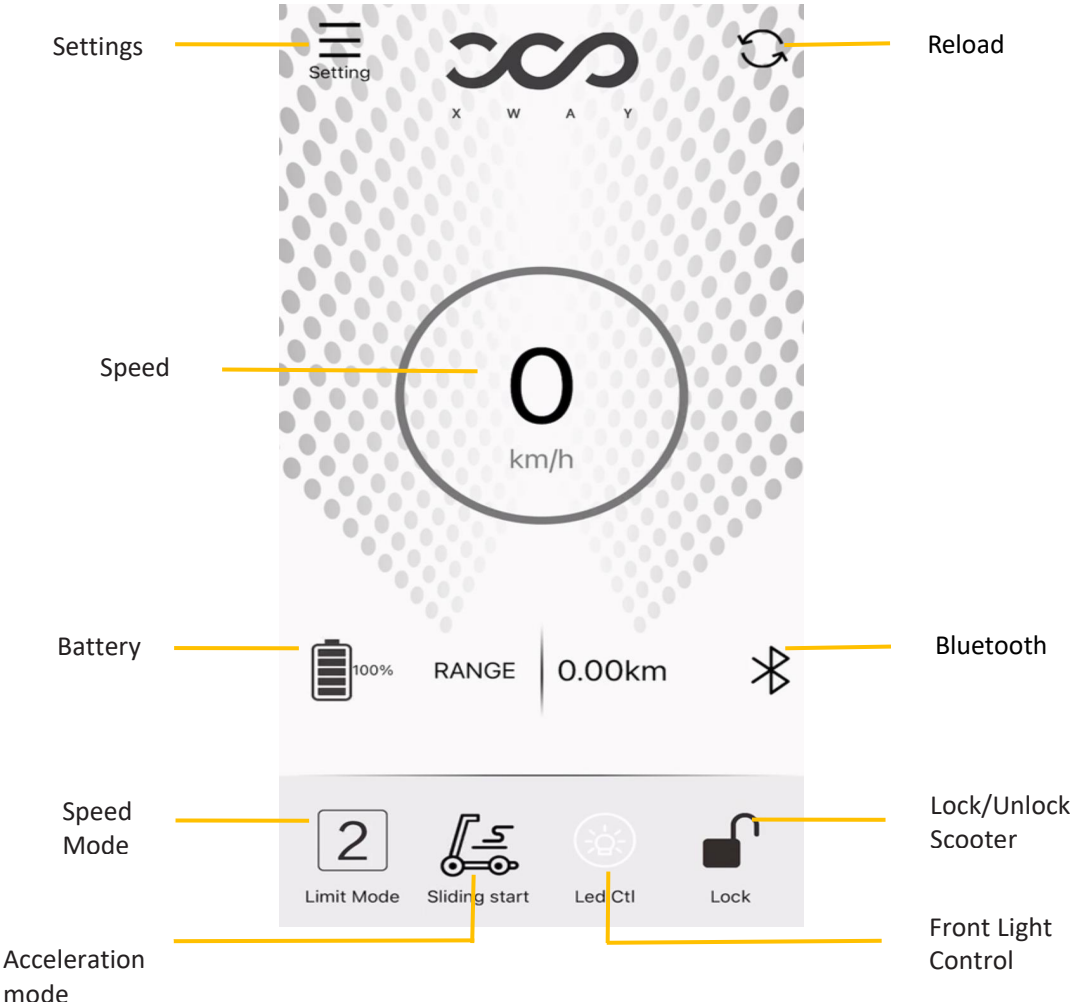

3. Setting

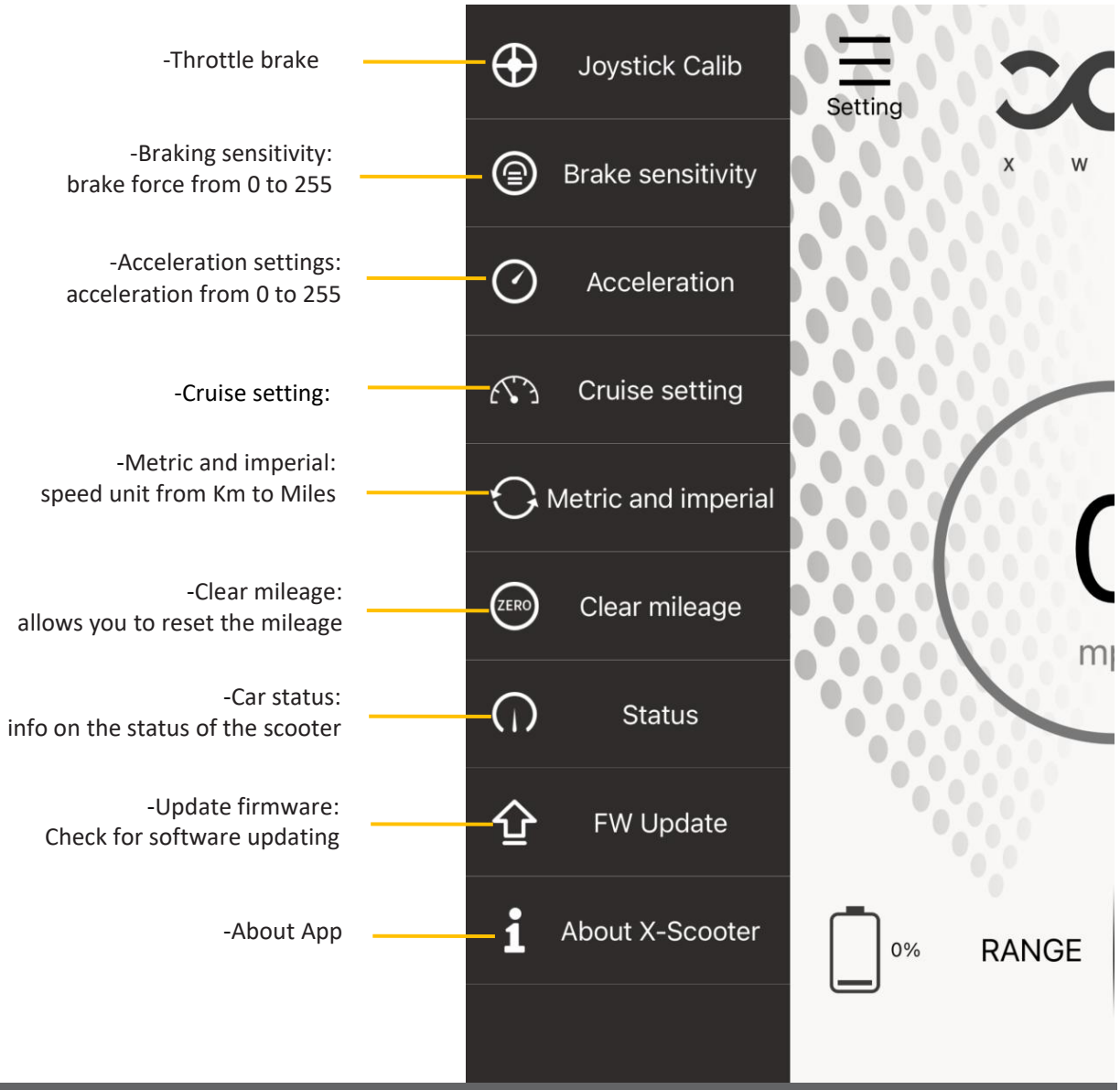

4. Charger Connection

Note:Only use the original charger and the original battery.

,

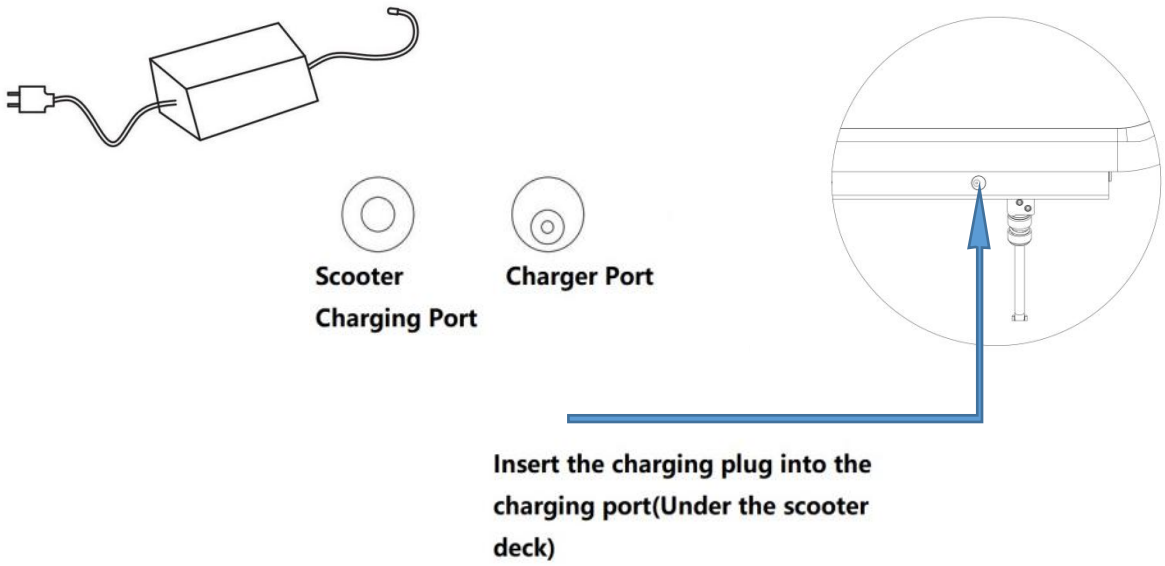

5. Assembly and Fold and unfold method

Assembly the scooter head when you get the new scooter from the box.

1. Connecting the plug on the handle bar to the steering rod

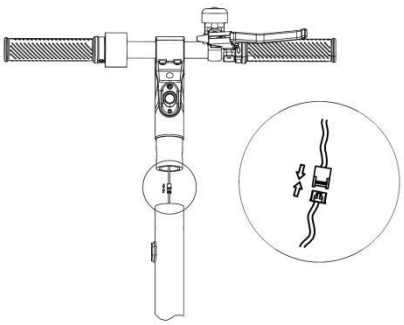

2. Use the wrench to tighten the screws on the handle bar

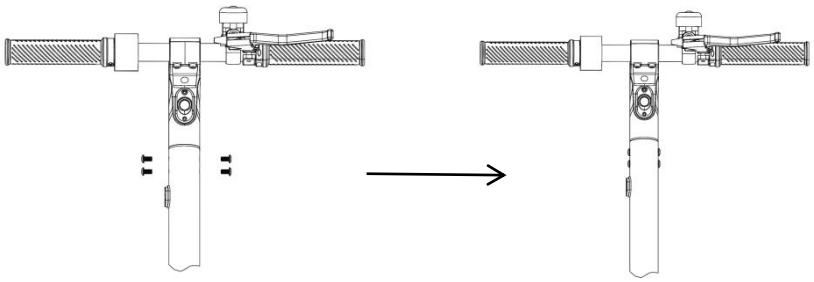

Folding and unfolding method as below:

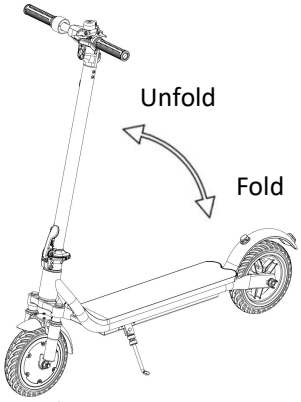

Unfolded status

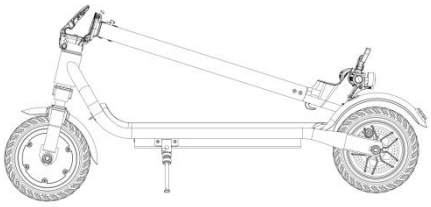

Fold status

Folding Method

1. Please make sure the scooter is turned off and the kickstand is retracted.
2. Press the button on the folding switch upward by hand, and then open the folding switch to make the pipe be active
3. Folding the pipe in the direction of the rear wheel, then lift active the square buckle (Lock) in the handle bar, and insert the scooter head hook into the fastener ; the folding is completed

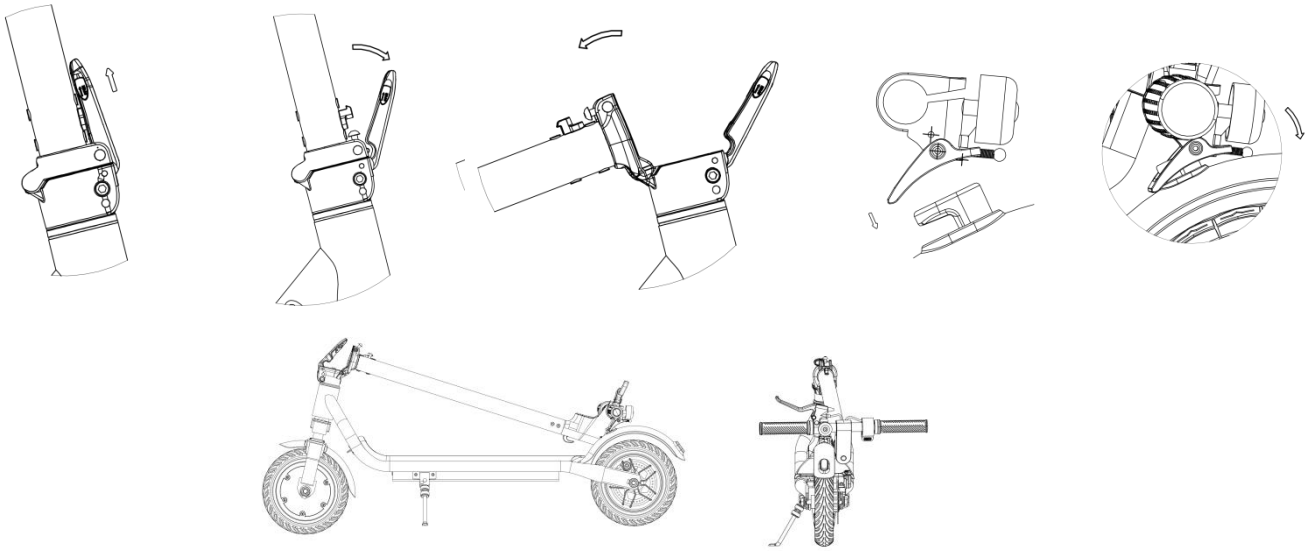

Unfolding Method:

1. Active the lock hook and lift a little to make the hook leave the fastener
2. Lift the pipe up, push forward the folding switch into the pipe, and when you hear a click, the unfolding step is complete.

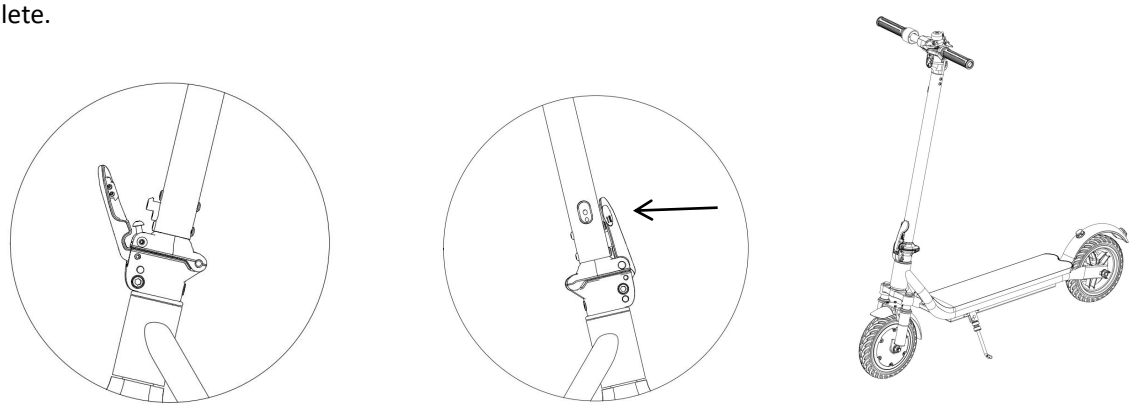

6. Handle assembly method

Note: The brake and accelerator may not be completely fixed before leaving the factory. Please check before use to prevent danger during riding. If not completely fixed, please take out the hexagon wrench from the toolkit to fix them.

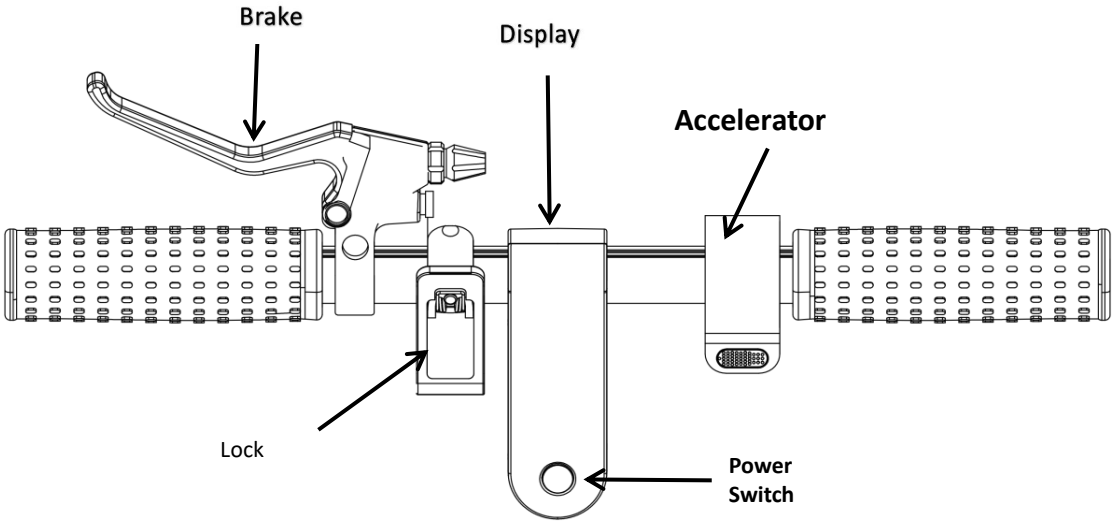

7. Fold device gap adjust instruction

1.When the gap of the folding device is too large, it can be adjust by using the matching wrench in the toolkit

2.The operation of the adjusting screws as follow:

Step 1: loosen screw-1;

Step 2: turn the screw-2, clockwise to reduce the folding gap, counterclockwise to increase the folding gap;

Step 3: Tighten the screws-1.

3.Note that before adjustment, ensure that the scooter is turned off and . After adjustment, make sure the folding switch can be fully locked and can be used normally.

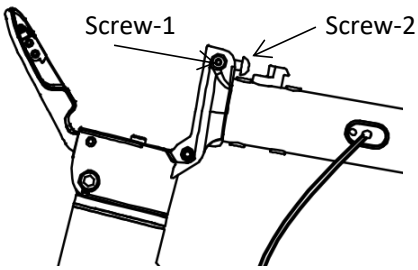

8. How to drive

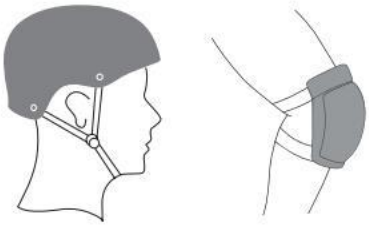

There is a risk of falling injury during the study period, so please wear a helmet and a protective gear as shown.

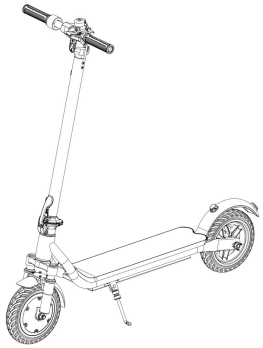

1 Turn on the scooter and check the battery status.

2 Single feet stand on the board, the other foot pedal back.

3 After electric scooter slide, the other foot pedal, when feet remain stable, tap the port finger (to be 5km / h above the speed will start)

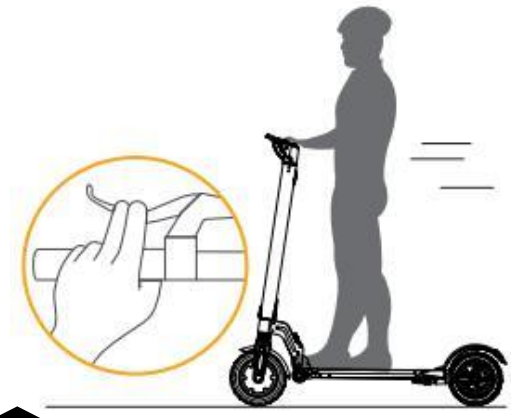

4 Release the throttle finger can slow deceleration, energy recovery system automatically open to help slow down, emergency brake need to shake the brake,handle at the front left handle.

5 When the focus is slightly tilted to the steering direction, and slowly turn the handle.

9. Safety Instruction

Do not use the scooter in rain

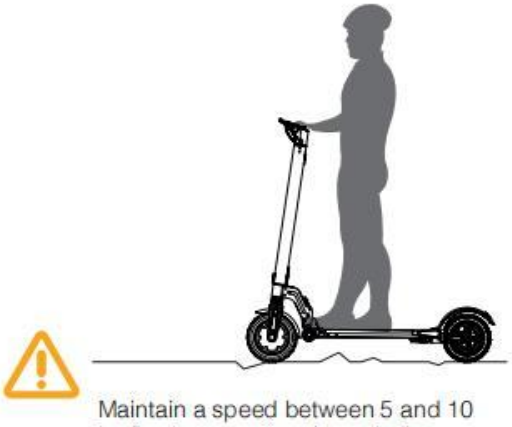

Maintain a speed between 5 and 10 km/h when passing through slow-downs, lift thresholds, bumpy roads, or other uneven surfaces. Bend the knees slightly to better adapt to this type of surface

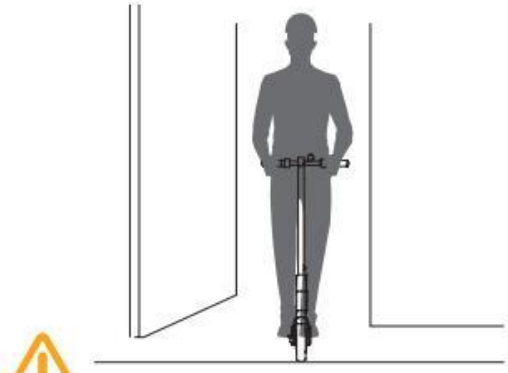

Pay attention to doors, elevators, and other obstacles

Do not accelerate downhill

Do not hang bags or other heavy objects on the handlebar bar

Always keep both feet on the scooter

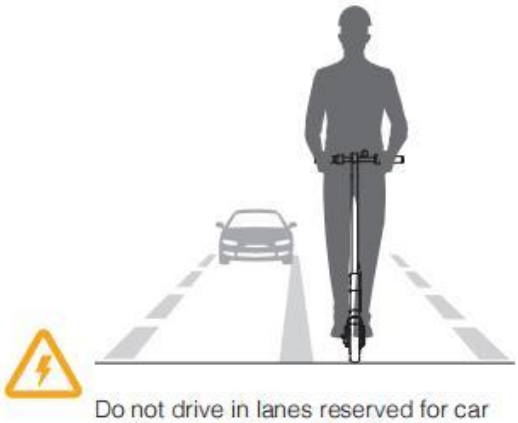

Do not drive in lanes reserved for car traffic or transit in residential areas where vehicles and pedestrians can circulate

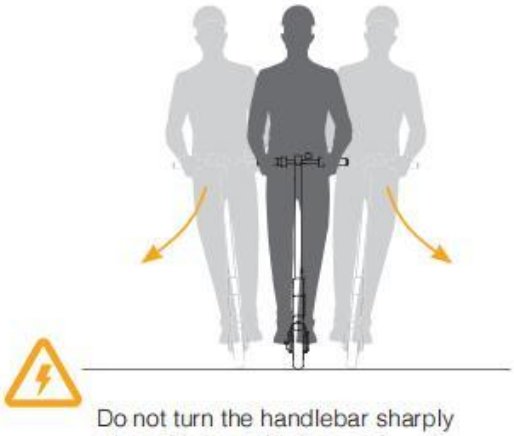

Do not turn the handlebar sharply when driving at high speed

Do not pass through puddles with a water level greater than 2 cm

Do not travel on the scooter with other people, including children

Do not place your feet on the mudguard

Always keep your hands firmly on the rear handlebar

An electric scooter is a sporting entertainment tool that is not a motorcycle, but once you drive it into a public area, it will also have a motorcycle property, so there are also possible safety risks for all modes of transport. Strictly following the instructions in this manual to drive for the maximum extent to protect you and the others' safety, and to ensure compliance with national and provincial traffic regulations and traffic regulations.

At the same time, you need to understand: Once you have an electric scooter on a public road or other public place, you may be exposed to the risk of unauthorized driving/improper operation of others or scooters, even if you are in full compliance with this safe driving guide. Like walking or cycling may also be hurt by other means of transport. As with all scooters, the faster the electric scooter is driving, the longer the brakes need, and the emergency brakes on some smooth surfaces can also cause the wheels to slip and lose balance or even fall. Therefore, it is important to be vigilant and maintain the proper speed during driving, ad it is important to maintain a reasonable safety distance with others and the transport means. Please be vigilant and drive at low speed before entering unfamiliar terrain.

Please respect the right of pedestrian way when driving. Avoid frightening pedestrians, especially the children. When pedestrians passing through, remind pedestrians and slowing down when passing. As far as possible from the left side of the pedestrian (applicable to the country where the scooter is traveling right). Face to face with pedestrians, keep on the right and lower speed.

You must strictly follow the safety requirements of this manual for drivers in countries and regions, where there are no national standards and regulations for electric scooters. We shall not be liable for any liability, personal injury, accident, legal dispute, and all other unfavorable events resulting from the use of violating the instructions indicated in this manual.

Do not lend the electric scooter to a person who does not operate to avoid injury. If give the electric scooter to a friend, be sure to be responsible for the safety of your friends, you should teach him(her), and tell him(her) must wear safety care.

Please check the electric scooter for each time before driving. If you find that the parts are loose, the battery life is obviously reduced, the tire is slow to leak or excessive wear, turn to abnormal sound or malfunction, please stop using it immediately, and don not driving force.

10. Daily maintenance and repair

Cleaning and storage

If the scooter body surface has been stained, please use a soft cloth dipped in a small amount of water to wipe it. If the stain is difficult to clean, use a toothpaste to wipe the soft cloth first and then wipe it with a damp cloth.

Tip: Do not use alcohol gasoline kerosene or other corrosive and volatile chemical solvents to clean, otherwise the appearance and internal structure of the scooter body will be seriously damaged. It is forbidden to use a pressure water gun to spray and flush. Please ensure that it is turned off and that the charging cable is unplugged and the rubber cap of the charging port is fastened, otherwise it may cause electric shock or serious failure due to internal water.

When not in use, please try to store it indoors in a dry and cool place, and try to avoid long time outdoor storage. The outdoor environment exposed to sunlight / overheating / under cooling will accelerate the appearance and aging of tires, reducing the life of their battery packs.

Battery maintenance

Do not place the battery in a high temperature above 50 °C or a low temperature below -20 °C (for example, do not put the battery pack in a car exposed in summer). Do not throw the battery pack into a fire, otherwise the battery may failure, overheating, and even the risk of fire. Please refer to the warning label of the body for other maintenance precautions of the battery.

Avoid completely draining the battery before recharging. Try to use it as long as possible to extend the life of the battery. In addition, the battery pack can play a higher battery life and performance when used at normal temperature; if the battery is used in an environment below 0 °C, the battery life will be reduced. Typically, in 0 °C or below 0 °C environment, the cruising range may be only half or less at normal temperature. After the temperature rises, the battery mileage will be restored.

Tip: A fully charged battery will run out of stored power after about 20-90 days of standby. A fully charged battery will run out of battery after about 20-50 days of standby. If you do not charge it in time, the battery may be over discharged and damaged. This damage is irrecoverable. Damage caused by long non-charging will not recharge and you will not be eligible for a free warranty.

(Note: Non-professionals are prohibited from accompanying Intentionally disassemble the battery pack, otherwise a serious safety accident may be caused by electric shock or short circuit)

11. Specifications

Performance Index	Item	Comments
Dimensions	Fold Size（mm）	1190x480x500
	Unfold Size（mm）	1190x480x1120
	Carton Size（mm）	1145x185x590
Weight	Max load（kg)	120
	Scooter weight（kg)	Around 15
Riding Requirements	Suitable Age	16-50
	Suitable Height (cm)	130-200
Main Parameter	Speed（km/h）	6/12/20/25Km/h
	Range（km）	30-36km
	Climb Capacity	≤12°
	Traversable terrain	Asphalt/flat pavement; obstacles≤1cm,gaps≤1cm,
	Waterproof Grade	IPX4
Battery	Nominal Voltage（V）	36
	Charging Input Voltage（V）	42
	Battery Capacity (AH)	7.8AH
	Smart BMS	Over-heating, over-charge, under-voltage protection
Motor	Motor Output Rating(W)	350W
Charge	Rated Input Voltage（V）	100-240
	Rated Output Voltage（V）	42
	Rated Current（A）	1.5
	Charging Time（h）	6

Range: When the electric scooter is full, 70kg load, 25 degrees Celsius, flat road without wind environment, in the energy-saving mode to keep at 15km/h even speed conditions measured, the actual life due to load, temperature, wind speed, road and operating habits and other factors to be different.

This device complies with part 15 of the FCC Rules. Operation is subject to the following two conditions: (1) this device may not cause harmful interference, and

(2) This device must accept any interference received, including interference that may cause undesired operation.

Changes or modifications not expressly approved by the party responsible for compliance could void the user's authority to operate the equipment. This equipment has been tested and found to comply with the limits for a Class B digital device, pursuant to Part 15 of the FCC Rules. These limits are designed to provide reasonable protection against harmful interference in a residential installation. This equipment generates uses and can radiate radio frequency energy and, if not installed and used in accordance with the instructions, may cause harmful interference to radio communications. However, there is no guarantee that interference will not occur in a particular installation. If this equipment does cause harmful interference to radio or television reception, which can be determined by turning the equipment off and on, the user is encouraged to try to correct the interference by one or more of the following measures:

- - Reorient or relocate the receiving antenna.
- - Increase the separation between the equipment and receiver.
- - Connect the equipment into an outlet on a circuit different from that to which the receiver is connected.
- - Consult the dealer or an experienced radio/TV technician for help.ct.

The device has been evaluated to meet general RF exposure requirement.