K29

Wireless Eabuds

User Maual

Version: 1.0

Overview

- Headset

① Multi-Function Button(MFB)
② Indicator
③ Vice Micophone
④ Volume +
⑤ Volume -
⑥ Main Microphone
⑦ Spare Eartips(L×1，S×1)

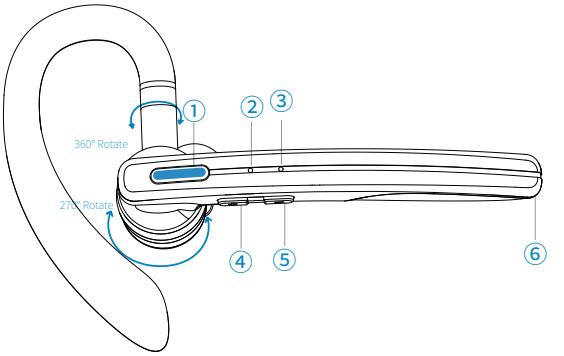

- Charging Case

⑧ Charging Pingo Pin
⑨ Battery Status Display

Wearing

- Choose the ear tips that fit your ears the best.
- Rotate the speaker to left side(Wear on the Right Ear).
- Slide headset over and behind your ear, then press gently toward your ear.
- Rotate boom until the main microphone is pointed toward your mouth.
- Boom moves up and down for a better fit.

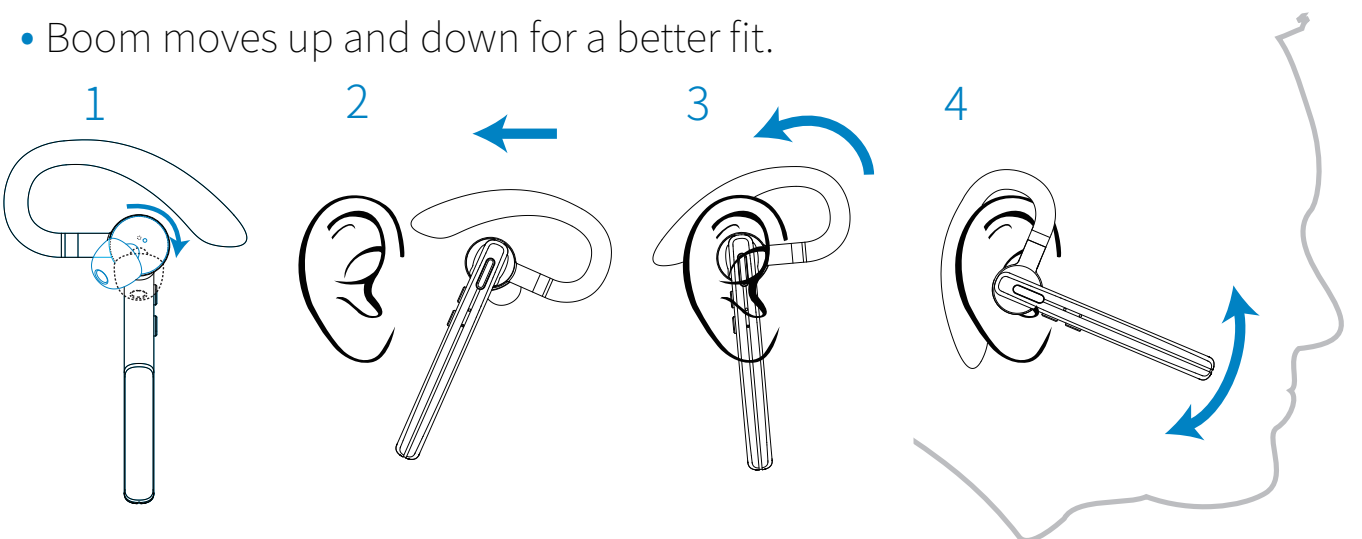

• Wear on your left ear, rotate the speaker to the rigth side, swing the boom upwards then twist it around so the eartip is on the other side before lowering the mic boom.

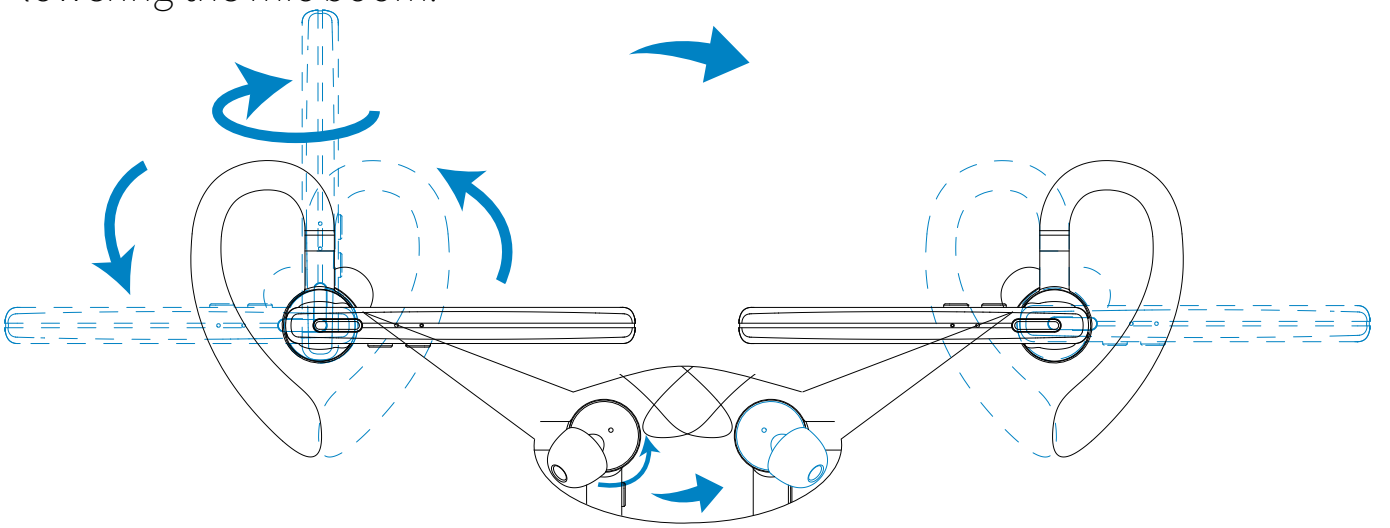

Power On/Off

(Note to first use:Please fully charge the headset and charging case.)

The headset will automatically power on when taken out of the charging case and power off when placed back into the case.

• Press and hold the MFB for 3 seconds to manually power on, click and hold the MFB for about 4 seconds to turn off.

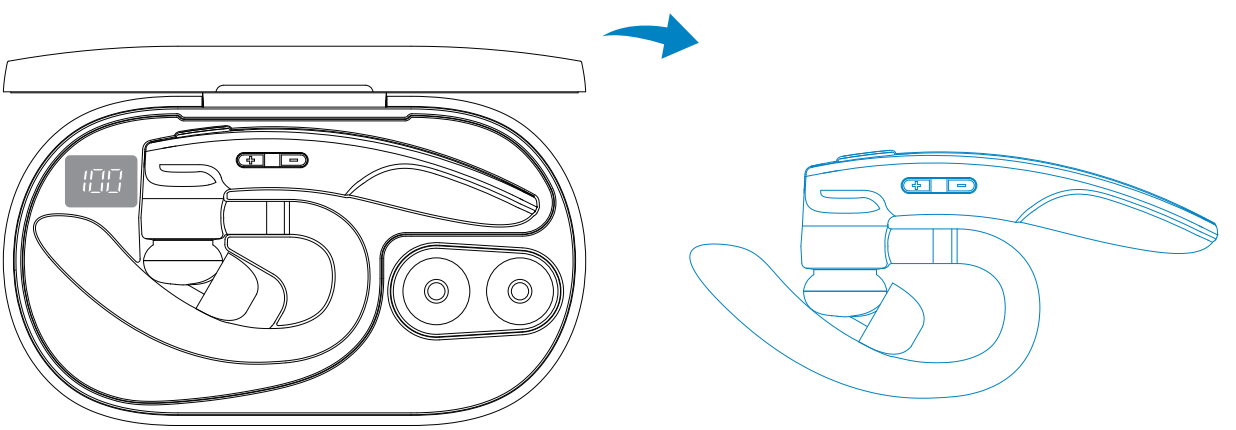

Pairing and Connect

Step1.Pick up headset and wait for 3-5 seconds. The indicator slowly flashing means it is available pairing with your device.

Step2.Activate bluetooth on your device, search and click the model “K29” to connect the headset.

Control

For music:

▶ / ▶II Press the **MFB** once

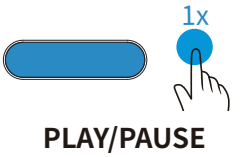

Press and hold the **Volume +**

Press and hold the **Volume -**

Quickly press the **Volume+** twice

Quickly press the **Volume -** twice

For calling:

Press the **MFB** once

Hold the **MFB** once for 2s

Quickly press the **MFB** twice

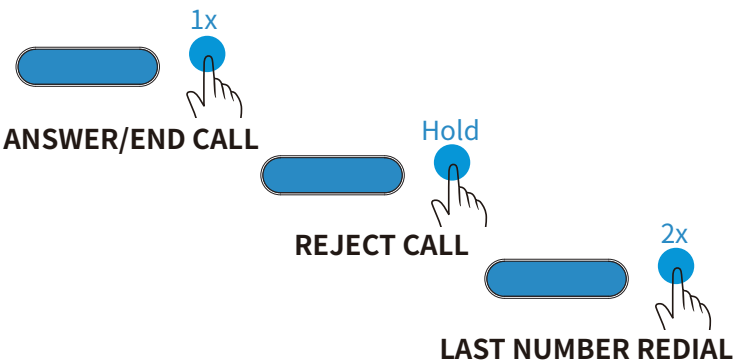

Activate Voice Assistant:

Quickly press the **MFB** thrice

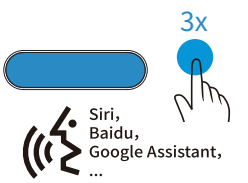

Resetting:

Hold the **MFB&Volume -** simultaneously for 1s

Charge the Charging Case&Headset

- Connect the input port with USB charging adapter or PC.
- Unplug the charging cable (timely) when fully charged.

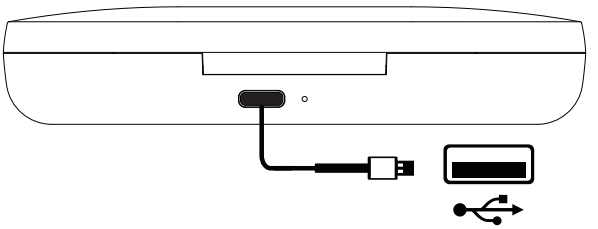

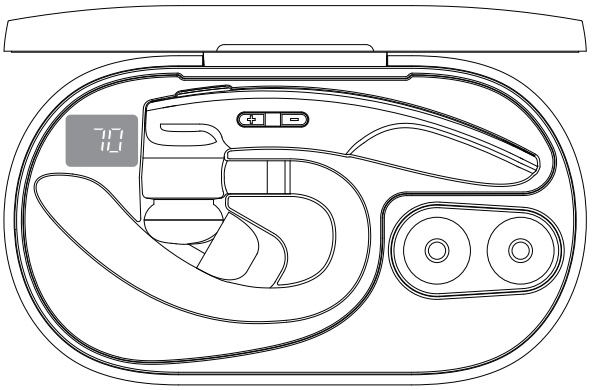

Charge the Headset

- Make sure the headset be in corresponding charging slots.
- The headset is fully charged when the battery status display goes off.
- Please charge both the earbuds and charging case at least once every 3 months when not in use for a long time.

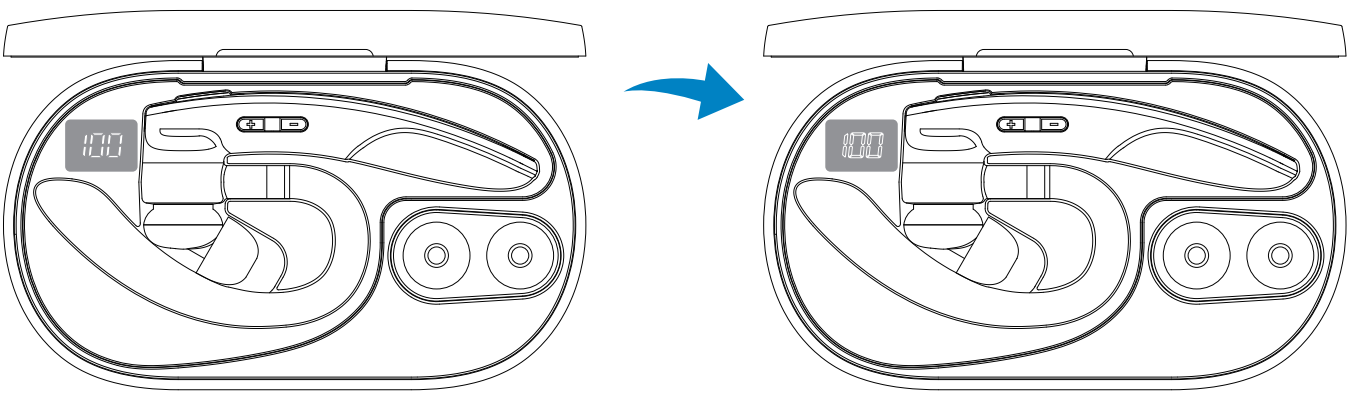

F&Q

Q: The mobile phone can not find the headset?

A: Possible Reasons:

1) The headset is not under ON and standby state;

2) The headset has connected withe other device;

3) The program of mobile phone is error.

Solutions:

1) Turn on the headset, press the MFB twice(indicator slowly flashing)to enable pairing status;

2) Recover the Wireless headset' s default settings;

3) Remove allpairing data in the Wireless of the mobile phone，and re-activate the bluetooth of your device to connect "K29".

Q: Why there is no sound from the headset ?
A: Possible Reasons:
1) The volume of the mobile phone is unsuitable;
2) The Wireless headset and mobile phone are not connected correctly;
3) The Wireless headset is out of the working range.
Solutions:
1) Adjust the volume in the mobile phone;
2) Operate with the reference of the use steps;
3) Keep the headset in the range of 10m to the mobile phone without any obstacle.

Safety Precautions:

- Do not use the headset at a high volume for any extended period to prevent hearing damage.
- Keep the headset, accessories and packaging parts out of reach of children to prevent accidents and choking hazards.
- Clean the unit with a soft cloth or damp chamois leather. Never use solvents.
- Put the unit in a dry and shady place and keep away from sharp objects to avoid scratches.
- Do not expose the headset to moisture, extreme of prolonged heat, cold, humidity, or other adverse conditions.
- Stop using the device immediately if it causes discomfort or pain.
- Don't overcharge the device for a long time.
- Charge the case with DC 5V⎓1A chargers/adapters certified.

FCC Statement

This device complies with Part 15 of the FCC Rules. Operation is subject to the following two conditions:
(1)This device may not cause harmful interference.
(2)This device must accept any interference received, including interference that may cause undesired operation.
2. Changes or modifications not expressly approved by the party responsible for compliance could void the user's authority to operate the equipment.
Note:This equipment has been tested and found to comply with the limits for a class B digital device,pursuant to Part 15 of the FCC Rules. These limits are designed to provide reasonable protection against harmful interference in a residential installation.

This equipment generates uses and can radiate radio frequence energy and,if not installed and used in accordance with the instructions,may cause harmful interference to radio communications.However,there is no guarantee that interference will not occur in a particular installation.if this equipmemt does cause harmful interference to radio or television reception,which can be determined by turning the equipment off and on,the user is encouraged to try to correct the interference by one or more of the following measures:

- Reorient or relocate the receiving antenna.
- Increase the separation between the equipment and receiver.
- Connect the equipment into an autlet on a circuit different from that to which the receiver is connected.
- Consult the dealer or an experienced radio/TV technician for help.

The device has been evaluated to meet general RF exposure requirement. The device can be used in portable exposure condition without restriction.

Label

Name: Wireless Eabuds

Model: K29

FCC ID: 2BBH4K29

Made in China