NAME：NKR3 ECU

PRODUCT MODEL：NKR3-O-SX-21470

PRODUCTCODE：21470

1 Overview

1.1 Background

The content described in this document applies to Geely Auto CM1E project。

1.2 Product function description

This product can provide starting the vehicle with NFC ,in addition to this NKR also can unlock door and body latches in some urgent case.

1.3 Product index function parameter

Num.	Technical index function	Design parameter value identification	Remark
1	Input voltage	9-16V	
2	Input current	15.2A(Max)	
3	Standby current	＜60mA(average current)	
4	Sleep current	＜1mA	
5	Effective distance of swiping a card	0～40mm	The distance is between the antenna and the NFC card
6	Effective area of swiping a card	30*90mm	20mm plane, the center point of the NFC card is within the range of the NFC module
7	Working frequency	13.56MHz	
8	Working temperature	-35℃～+85℃	
9	Storage temperature	-40℃～+90℃	
10	Protection grade	IP52	
11	NFC communication protocol	ISO14443A	
12	Communication	LIN	

1.4 Connector model and interface definition

Type of wire end connector	Brand
34696-0100	Molex

PINNum.	definition	Operating voltage	Operating current	Input/output	signal source
1	Lin	9～16V	0.1A(max)	I/O	Car
2	Release_M_SILL	9～16V	4.4A(max)	Output	
3	Release_M_CANT	9～16V	4.4A(max)	Output	
4	Rest_M_CANT	9～16V	4.4A(max)	Output	
5	Rest_M_SILL	9～16V	4.4A(max)	Output	
6	/	/	/	/	
7	Ground	9～16V	15.2A(max)	Input	Battery
8	Release_M_Apillar	9～16V	14.5A(max)	Output	
9	Rest_M_Apillar	9～16V	14.5A(max)	Output	
10	BAT+	9～16V	15.2A(max)	Input	Battery

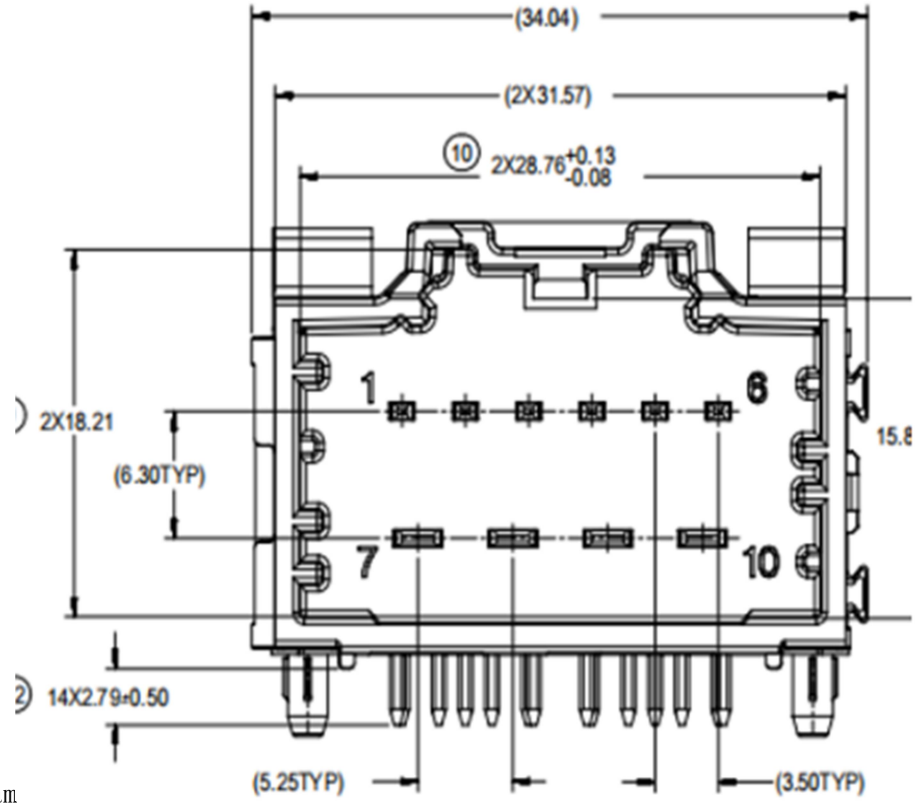

Connector diagram

1.5 Product design reference materials

Normative reference documents	
Standard no.	name of the standard
ISO/IEC 17025	General requirements for the competence of testing and calibration laboratories
ISO 11452-1:2005/Amd.1: 2009	Road vehicles — Component test methods for electrical disturbances from narrowband radiated electromagnetic energy — Part 1: General principles and terminology
CISPR 25 3rd Ed	Limits and methods of measurement of radio disturbance characteristics for the protection of receivers used on board vehicles
SAE J551-5 Rev JAN2004	Performance Levels and Methods of Measurements of Magnetic and Electric Field Strength from Electric Vehicles, Broadband, 9 kHz To 30 MHz.
SAE J551-5 Rev MAY2012	Performance Levels and Methods of Measurements of Magnetic and Electric Field Strength from Electric Vehicles,Broadband, 150 kHz To 30 MHz.
MIL-STD-461F	United States Department of Defense Interface Standard, Requirements for the Control of Electromagnetic Interference Characteristics of Subsystems and Equipment
ISO 11452-1-2005 and Amd 1:2008	Road vehicles - Component test methods for electrical disturbances from narrowband radiated electromagnetic energy - Part 1: General principles and terminology
ISO 11452-2-2004	Road vehicles, Electrical disturbances by narrowband radiated electromagnetic energy - Component test methods Part 2 - Absorber-lined shielded enclosure
ISO 11452-4-2011	Road vehicles - Component test methods for electrical disturbances from narrowband radiated electromagnetic energy - Part 4: Harness excitation methods
ISO 11452-8-2007	Road vehicles -- Component test methods for electrical disturbances from narrowband radiated electromagnetic energy -- Part 8: Immunity to magnetic fields
ISO 11452-9-2012	Road vehicles -- Component test methods for electrical disturbances from narrowband radiated electromagnetic energy -- Part 9: Portable transmitters
ISO 7637-1-2002 and Amd 1:2008	Road vehicles, Electrical disturbance by conduction and coupling Part 1 -Definitions and general considerations
ISO 7637-3-2007	Road vehicles, Electrical disturbance by conduction and coupling Part 3: Electrical transient transmission by capacitive and inductive coupling
ISO 10605-2008 and Cor 1:2010	Road vehicles - Test methods for electrical disturbances from electrostatic discharge
ISO 16750-4-2010	Road vehicles — Environmental conditions and testing for electrical and electronic equipment — Part 4: Climatic loads

2 Product function description

2.1 Description of product structure

2.1.1 Appearance and requirements

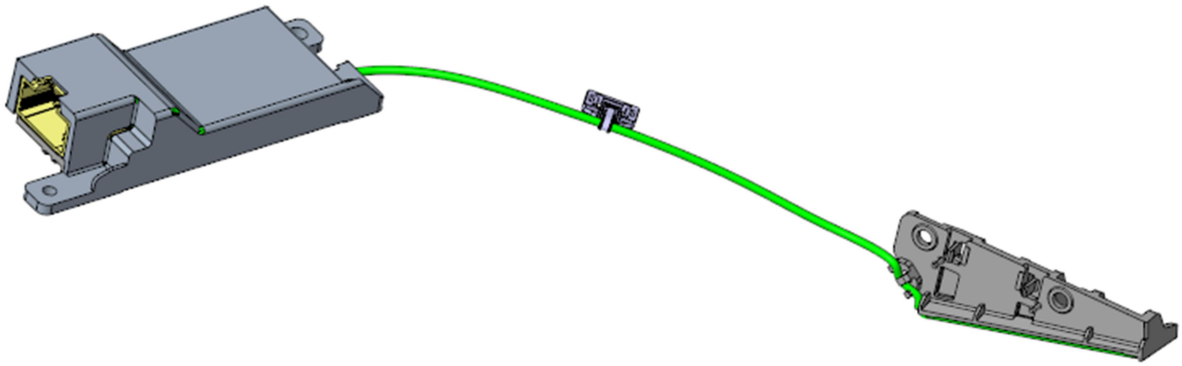

The appearance should be clean and tidy, and there should be no dents, obvious scratches, cracks, deformations, burrs, mildew and other defects on the surface. Surface coating should not bubble, crack, fall off; Parts should be fastened without looseness.

2.1.2 Structural dimension/material/weight composition

The main size of the NFC module (excluding the mounting foot and connector bulge) : 90*53.4*8.8mm (length * width * height).Overall size (including mounting feet and connector protrations) : 481*63*55mm (length * width * height).

The material, weight and quantity of materials used in the structure are shown in the following table:

NO.	name	material	weight (g)	quantity
1	Top cabinet	PC+ABS	12	1
2	PCBA	Components	19.5	1
3	Harness	PVC/Cu	30.5	1
Total weigh t	About62g			

2.1.3 Top cabinet

PC+ABS material, matched with the lower shell to protect the internal structure of NFC.

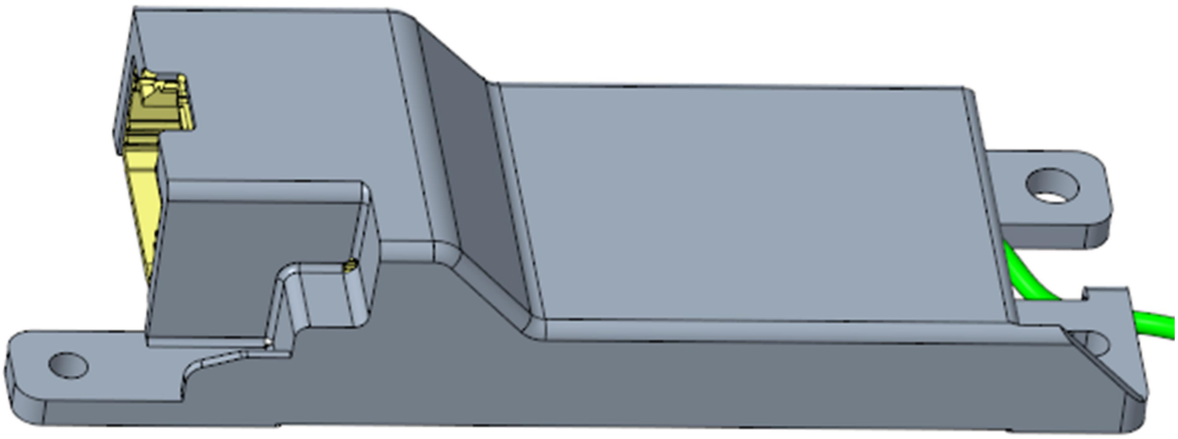

2.1.4 PCBA

Provide transmitting power of RF field with coil.

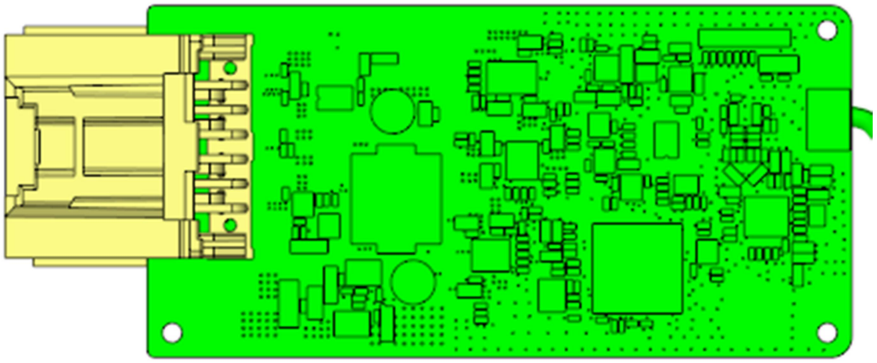

2.1.5 Description of waterproof and dustproof module

The flat upper cover and the lower shell are bonded by a snap structure, and the upper cover and the lower shell contact face to face, which plays a certain dust-proof and water-proof role.

2.1.6 Module installation instructions

After the module is located by two positioning columns on the interior panel, the remaining 4 holes are fastened by screwing in self-tapping screws.

2.2 Detailed description of product hardware

Mian Function Introduce:

1. Micro Control Unit
2. DC-DC&LDO Circuit Module
3. LIN Communication Module
4. NFC Communication Module
5. NFC Antenna
6. Driver Module

3 Product packaging instructions

The specific packaging requirements entered by the customer shall prevail. If there is no mandatory requirement, the packing form is suggested to follow the general scheme of pulp mold and vertical insert as shown below. The outer packing carton is in the form of 0201 carton.

we, Hefei Invispower Co.,Ltd Limited, hereby declares that the radio equipment NKR3 ECU, is in compliance with Directive 2014/53/EU."

c) Please add the operating frequency range and output power, such as

NFC Operating frequency: 13.56MHz

H-Field: 12.83dBuA/m@3m

FCC Statement

This device complies with part 15 of the FCC rules. Operation is subject to the following two conditions: (1) this device may not cause harmful interference, and (2) this device must accept any interference received, including interference that may cause undesired operation.

Changes or modifications not expressly approved by the party responsible for compliance could
void the user's authority to operate the equipment.

NOTE: This equipment has been tested and found to comply with the limits for a Class B digital device, pursuant to part 15 of the FCC Rules. These limits are designed to provide reasonable protection against harmful interference in a residential installati

on. This equipment generates uses and can radiate radio frequency energy and, if n ot installed and used in accordance with the instructions, may cause harmful interfer ence to radio communications. However, there is no guarantee that interference will not occur in a particular installation. If this equipment does cause harmful interferenc e to radio or television reception, which can be determined by turning the equipment off and on, the user is encouraged to try to correct the interference by one or more of the following measures:

- Reorient or relocate the receiving antenna.
- Increase the separation between the equipment and receiver.
- Connect the equipment into an outlet on a circuit different from that to which the receiver is connected.

-

Consult the dealer or an experienced radio/TV technician for help important announc ement

Important Note:

Radiation Exposure Statement

This equipment complies with FCC radiation exposure limits set forth for an uncontrolled environment. This equipment should be installed and operated with minimum distance 20cm between the radiator and your body.

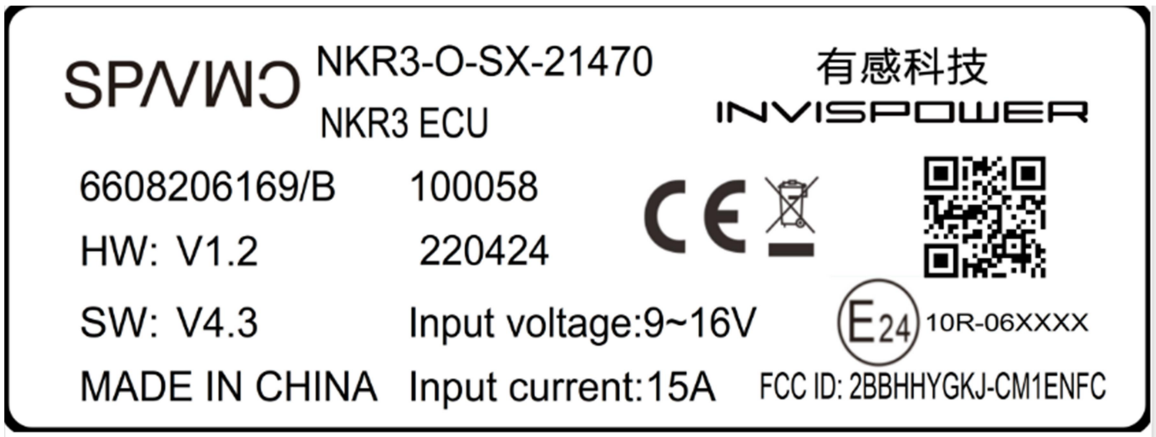

This transmitter must not be co-located or operating in conjunction with any other antenna or transmitter.

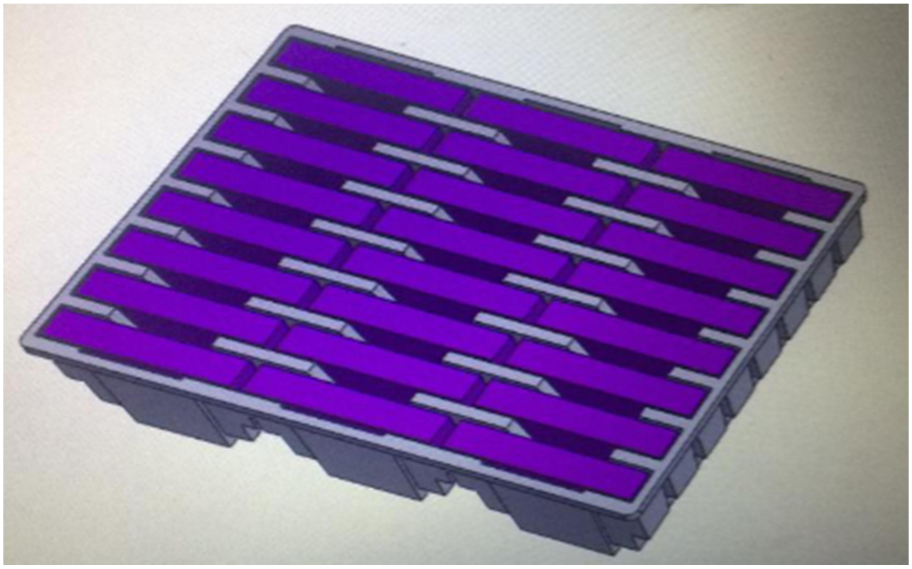

Packing form (pulp mold)

Outer packing (Type 0201)