Antenna specification for approval

Customer name	Telefield Ltd.		
Address	Unit 613, 6/F, Building 12W, Phase III, Hong Kong Science Park, Shatin, New Territories, Hong Kong		
Model	317 Hair detector		
Antenna frequency	2.4GHZ&5GHz		
Antenna function	WIFI&BT&5Gwifi(2) antenna		
Antenna material	FPC	FPC color	black
model	SF2186A-1B2-A		
Material number	SF2186A-1R22G-035-A		
Customer Part Number			

Ward accepted the signature		Client acknowledges signature	
structure		Purchase	
Document control		structure	
radio frequency		engineering	
To examine		QC	
Responsible	LTT	To examine	
date 2023.04.06	Seal area	date 2023.04.06	Seal area

Serial number	Certification number	Material type	Date of issue	Remarks
1	A2220186128101ER1	Tinned copper wire	2022-05-17	One year
2	CANEC2227657302	halogen	2022-12-28	One year
3	CANEC2227657303	Adhesive	2022-12-28	One year
4	SHAEC23000346911	FEP sheath	2023-01-13	One year
5	SHAEC22004639301	FEP insulation	2022-12-15	One year
6	SZXEC2203054804	Tin wire	2022-09-19	One year
7	SZXEC2203054808	Tin	2022-09-19	One year
8	ETR22800844	Printing ink	2022-08-09	One year
9	EKR22501369	Substrate	2022-05-27	One year
10	CANEC2227574118	EVA foam	2023-01-03	One year
11	SZXEC2202709609	Conductive cloth	2022-08-16	One year
12	CANEC2218227002	Gold plating	2022-08-30	One year

table of Contents

一:Device Support & Testable Antenna Type.....1

二:Overview.....2

三:Matching circuit diagram & machine picture & antenna picture3

四:Antenna standing wave ratio & Antenna Efficiency...4

五:3D pattern.....5

六:Antenna map.....6

七:Structural drawing.....7

6th Floor, Building B, Hexi Hangcheng Industrial Zone, No. 135 Qianjin Second Road, Bao 'an District, Shenzhen
CityTel: 0755-29985185 Fax: 0755-27487028

一:Device Support & Testable Antenna Type

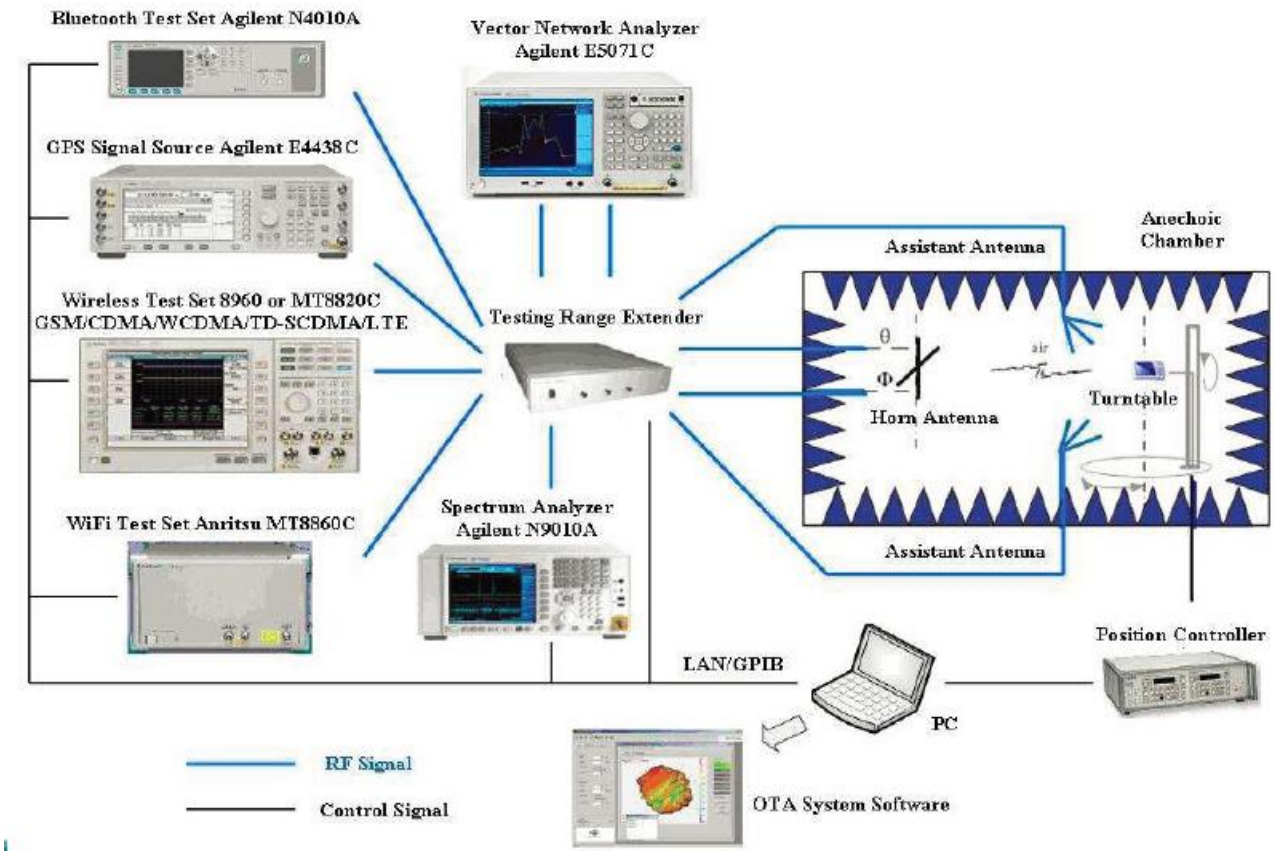

Antenna function	Frequency Range	test instrument	test method	standard test
2G antenna (GSM)	824MHz-960MHz, 1710MHz-1990MHz	5071B、8960 OTA darkroom	Active test, passive test	Soward standards, customer requirements
3G antenna (WCDMA/TDSCDMA/CDMA-EVDO/2000)	824MHz-960MHz, 1710MHz-2170MHz	5071B、8960 OTA darkroom	Active test, passive test	Soward standards, customer requirements
4G antenna (LTE-FDD/LTE-TDD)		5071B、CMW500、SP8011、OTA darkroom	Active test, passive test	Soward standards, customer requirements
WIFI antenna	2.4GHz-2.48GHz, 5.15GHz-5.35GHz, 5.725GHz-5.825GHz	5071B、CMW500、OTA darkroom、router、PC	Active test, passive test, APK actual test, throughput test	Soward standards, customer requirements
BT antenna	2.4GHz-2.48GHz,	5071B、OTA darkroom、Bluetooth Speaker	Passive test, actual test	Soward standards, customer requirements
Positioning antenna (GPS, GLONASS, Beidou, Galileo)	1.575.42MHz±10MHz 1602MHz+0.5625MHz 1561MHz+2.046MHz	5071B、OTA darkroom、APK	Passive test, actual test	Soward standards, customer requirements
NFC antenna	13.56MHz	5071B、Dedicated test fixture、OTA darkroom、APK	Passive test, actual test	Soward standards, customer requirements
Remote control antenna	433MHz	5071B、OTA darkroom	Passive test, actual test	Soward standards, customer requirements

二:Overview

(1)Antenna performance

1. This approval sheet supports for MID project. FPC antennas include in this project. This report is for the performance of WIFI&BT antenna.
2. Antenna shape size: Meet the requirement of MID
3. Antenna band: 2.4GHz~5GHz
4. Antenna material: Antenna material meet the requirement of MID
5. Adhesive performance: Adhesive performance meet the requirement of MID
6. Antenna performance meet the spec below:

Description	2.4GHz	Units
VSWR	≤2.0	
Average Antenna Gain	≤0.36	dBi
Antenna Efficiency	≥40	%
Feed Impedance	50 ohms	
Operating Temperature	-40 to +85 deg C	
Polarization / Azimuth	Linear / Omni-directional	

(2)Mechanical Information

Mechanical Dimension	
Cable Length	035mm/GRAY
Description	WIFI&BT antenna
Material	FPC
Coaxial Cable	50Ω/O.D.0.81mm
Environmental	
Operation Temperature	-40 to +85 deg C
Storage Temperature	-40 to +85 deg C

三:Matching circuit diagram & machine picture & antenna picture

(1)Matching circuit

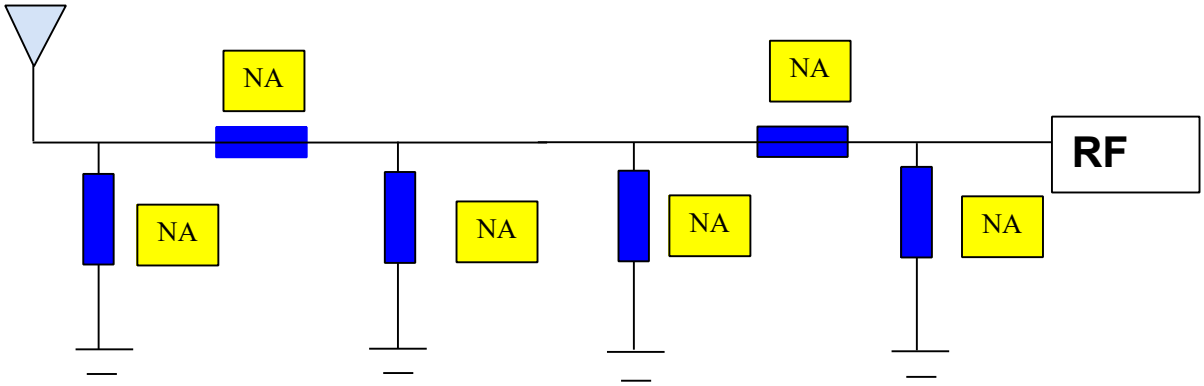

(2) Machine picture & antenna picture

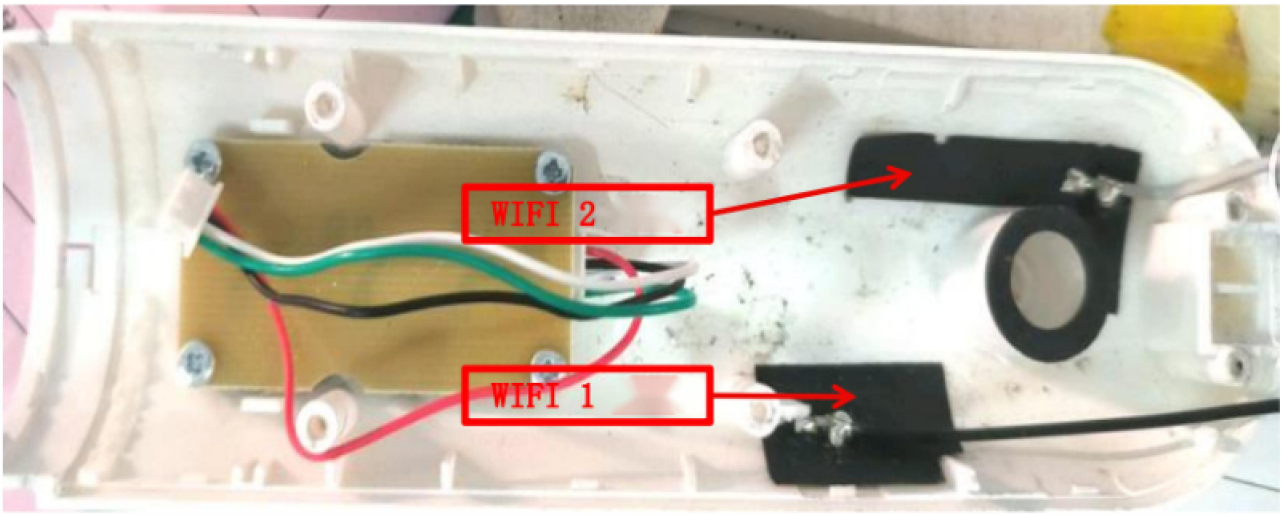

四:Antenna standing wave ratio & Antenna Efficiency

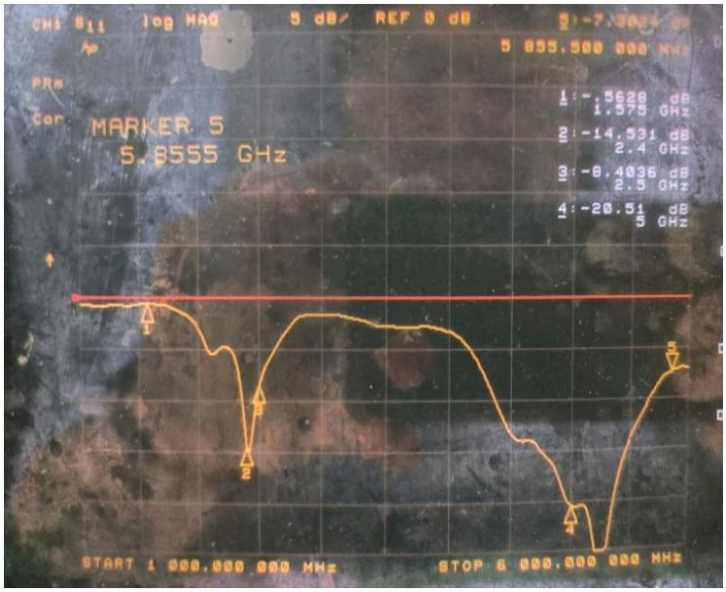

6th Floor, Building B, Hexi Hangcheng Industrial Zone, No. 135 Qianjin Second Road, Bao 'an District, Shenzhen
CityTel: 0755-29985185 Fax: 0755-27487028

Passive Test For 2.4Gwifi								
Freq	Effi	Effi	Gain	Gain	UHIS	DHIS	Max	Min
(MHz)	(%)	(dB)	(dBi)	(dBd)	(%)	(%)	(dB)	(dB)
2400	25.95	-5.86	-2.02	-4.17	14.431	11.523	-2.02	-15.55
2410	28.2	-5.5	-1.76	-3.91	15.161	13.037	-1.76	-14.88
2420	35.06	-4.55	-0.73	-2.88	18.673	16.383	-0.73	-13.31
2430	43.64	-3.6	0.09	-2.06	22.702	20.936	0.09	-11.08
2440	45.31	-3.44	0.3	-1.85	23.355	21.958	0.3	-9.84
2450	47.74	-3.21	0.36	-1.79	24.063	23.677	0.36	-8.8
2460	46.84	-3.29	0.29	-1.86	23.531	23.313	0.29	-9.7
2470	45.05	-3.46	0.1	-2.05	22.406	22.643	0.1	-10.3
2480	46.08	-3.37	0.31	-1.84	23.056	23.022	0.31	-10.97
2490	54.19	-2.66	1	-1.15	27.045	27.146	1	-10.79
2500	59.49	-2.26	1.4	-0.75	29.847	29.643	1.4	-10.86

Passive Test For 5Gwifi								
Freq	Effi	Effi	Gain	Gain	UHIS	DHIS	Max	Min
(MHz)	(%)	(dB)	(dBi)	(dBd)	(%)	(%)	(dB)	(dB)
5000	59.24	-2.27	3.71	1.56	22.078	37.157	3.71	-16.34
5100	80.48	-0.94	5.14	2.99	30.494	49.987	5.14	-21.86
5200	83.64	-0.78	5.39	3.24	32.716	50.92	5.39	-19.4
5300	75.22	-1.24	5.14	2.99	29.705	45.513	5.14	-18.07
5400	78.8	-1.03	4.98	2.83	32.476	46.328	4.98	-17.08
5500	80.74	-0.93	5.16	3.01	35.183	45.559	5.16	-16.3
5600	74.13	-1.3	4.39	2.24	34.202	39.932	4.39	-17.48
5700	82.76	-0.82	4.73	2.58	38.889	43.876	4.73	-17.56
5800	74.54	-1.28	4.24	2.09	35.048	39.489	4.24	-16.65
5900	72.83	-1.38	4.22	2.07	36.476	36.35	4.22	-15.43
6000	84.61	-0.73	4.99	2.84	45.399	39.207	4.99	-17.25

五:3D pattern

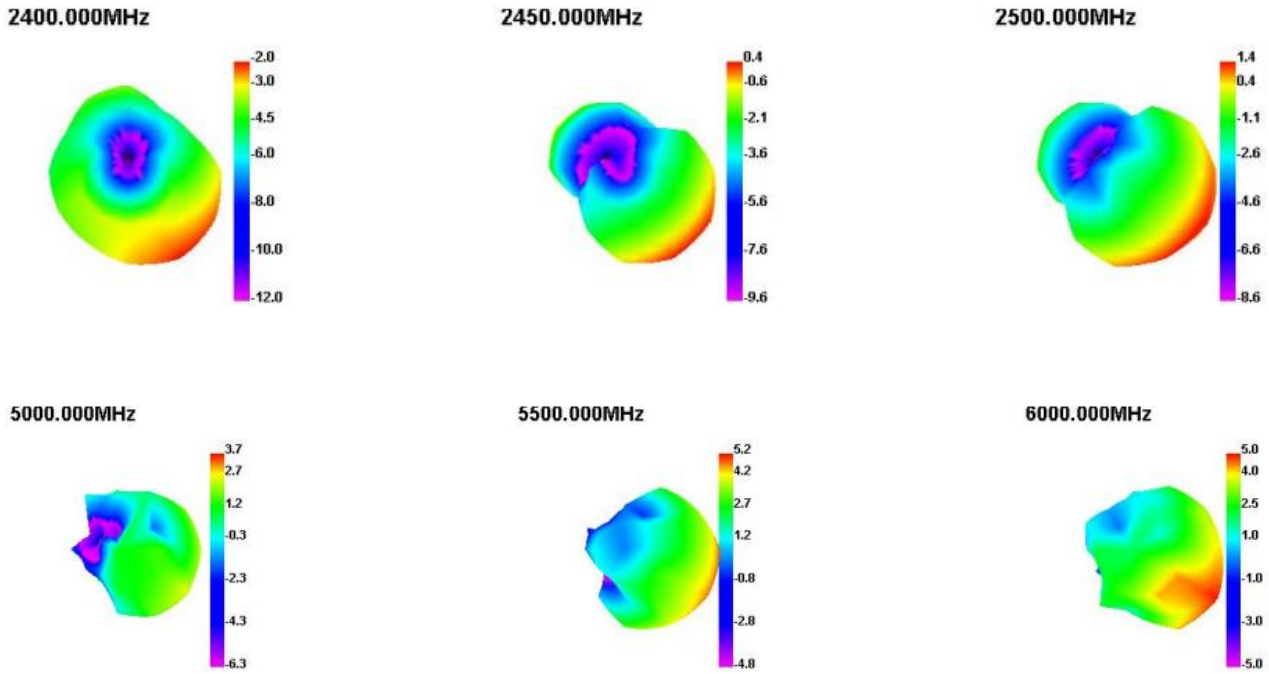

六:Antenna map

Measured effect	
Model number	1
Test environment	Soward Research and Development Center
Test equipment	Redmi K50 Pro
Test distance	About 8 meters

七:Structural drawing

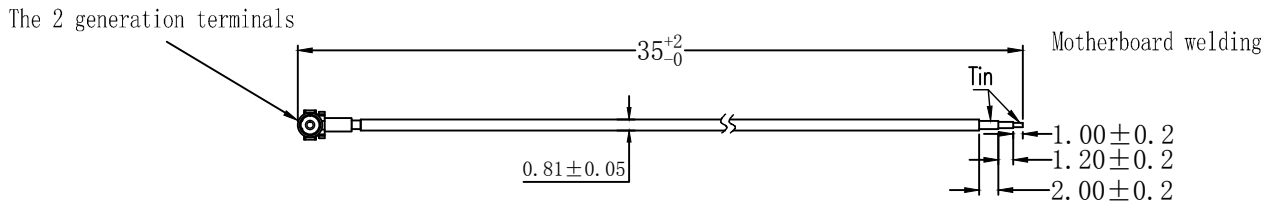

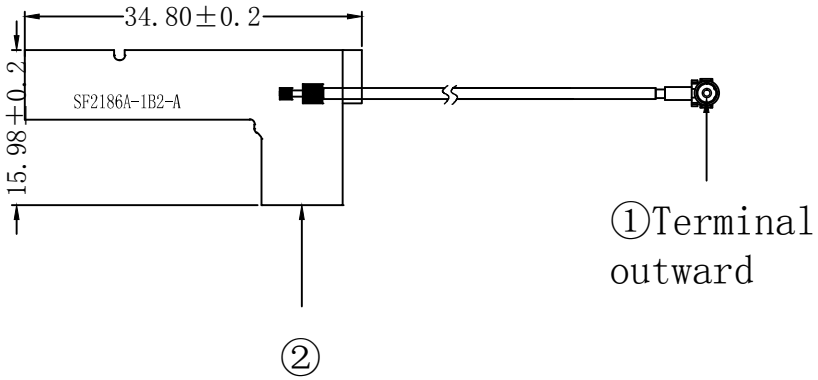

technical requirements:
1.* for critical dimensions;
2.Size conform to the requirements of the drawings;
3.No virtual welding welding point, false welding。Require full welding points。
4.Network test pass。
5.No marked tolerance according toSJ/T 10628 1995 6classes;

5										
4										
3						signatures	date	mass	signatures	date
2	FPC	black	1	SF2186A-1B2-A	RD	YWD	2023.05.11	Q C		
1	coaxial line	gray	1	ϕ=0.81	RF					
	name	color	quantity	specifications	audits			approval		

SWARD

ShenZhen SWARD Communication Technology Co.Ltd

SF2186A-1R22G-035-A

time markup					percentage
1			A		1 : 1

ROHS

SWD-FM-RD-012 A.0/2019.12