FCC TEST REPORT
FCC ID:2BBKU-M001

Report Number.....:	**ZKT-2304283164E**
Date of Test.....	Apr. 28, 2023 to Jun. 07, 2023
Date of issue.....:	Jun. 07, 2023
Total number of pages.....	22
Test Result .....:	PASS
Testing Laboratory.....:	**Shenzhen ZKT Technology Co., Ltd.**
Address .....:	1/F, No. 101, Building B, No. 6, Tangwei Community Industrial Avenue, Fuhai Street, Bao'an District, Shenzhen, China
Applicant's name .....:	**Xiamen Weiyinkuai Technology Co., Ltd.**
Address .....:	Unit 312, No. 528, Xinglinwan Road, Jimei District, Xiamen, China
Manufacturer's name .....:	**Shenzhen Botai Shenghua Technology Co., Ltd**
Address .....:	2/F, Building 2, Guangyu Industrial Park, Huangtian, Xixiang, Baoan District, Shenzhen
Test specification:	
Standard.....:	FCC CFR Title 47 Part 15 Subpart C
Test procedure.....:	/
Non-standard test method .....:	N/A
Test Report Form No.....:	TRF-EL-107_V0
Test Report Form(s) Originator.....:	ZKT Testing
Master TRF .....:	Dated: 2020-01-06

This device described above has been tested by ZKT, and the test results show that the equipment under test (EUT) is in compliance with the FCC requirements. And it is applicable only to the tested sample identified in the report.
This report shall not be reproduced except in full, without the written approval of ZKT, this document may be altered or revised by ZKT, personal only, and shall be noted in the revision of the document.

Product name.....:	**Cheetah Mag**
Trademark .....:	N/A
Model/Type reference.....:	M001
Ratings.....:	Input: DC 5V 3A, DC 9V 3A, DC 12V 2.92A, DC 15V 2.33A, DC 20V 1.75A Wireless Output Phone: 15W Max

Testing procedure and testing location:

Testing Laboratory.....:	**Shenzhen ZKT Technology Co., Ltd.**
Address.....:	1/F, No. 101, Building B, No. 6, Tangwei Community Industrial Avenue, Fuhai Street, Bao'an District, Shenzhen, China
Tested by (name + signature).....:	Tom Zou Tom Zou
Reviewer (name + signature).....:	Jackson Fang Jackson Fang
Approved (name + signature).....:	Lake Xie Lake Xie

TABLE OF CONTENTS

1. VERSION **4**
2. TEST SUMMARY **5**
2.1 TEST FACILITY 6
2.2 MEASUREMENT UNCERTAINTY 6
3. GENERAL INFORMATION **7**
3.1 GENERAL DESCRIPTION OF EUT 7
3.2 Test mode 7
3.3 Block Diagram of EUT Configuration 7
3.4 Test Conditions 8
3.5 Description Of Support Units (Conducted Mode) 8
3.6 EQUIPMENTS LIST FOR ALL TEST ITEMS 9
4. CONDUCTED EMISSION TEST **10**
4.1 CONDUCTED EMISSION MEASUREMENT 10
4.1.1 POWER LINE CONDUCTED EMISSION Limits 10
4.1.2 TEST PROCEDURE 10
4.1.3 DEVIATION FROM TEST STANDARD 11
4.1.4 TEST SETUP 11
4.1.5 EUT OPERATING CONDITIONS 11
4.1.6 Test Result 11
5. RADIATED EMISSION MEASUREMENT **14**
5.1 Radiated Emission Limits 14
5.2 Anechoic Chamber Test Setup Diagram 15
5.3 Test Procedure 15
5.4 DEVIATION FROM TEST STANDARD 16
5.5 Test Result 16
6. BANDWIDTH TEST **19**
7. TEST SETUP PHOTO **22**
8. EUT CONSTRUCTIONAL DETAILS **22**

1. VERSION

Report No.	Version	Description	Approved
ZKT-2304283164E	Rev.01	Initial issue of report	Jun. 07, 2023

2. TEST SUMMARY

Test Item	Section in CFR 47	Result
Antenna requirement	15.203	Pass
AC Power Line Conducted Emission	15.207	Pass
Spurious Emission	15.209(a)(f)	Pass
20dB Bandwidth	15.215	Pass

NOTE:

(1)" N/A" denotes test is not applicable in this Test Report

2.1 TEST FACILITY

Shenzhen ZKT Technology Co., Ltd.
Add. : 1/F, No. 101, Building B, No. 6, Tangwei Community Industrial Avenue, Fuhai Street, Bao'an District, Shenzhen, China

FCC Test Firm Registration Number: 692225
Designation Number: CN1299
IC Registered No.: 27033

2.2 MEASUREMENT UNCERTAINTY

The reported uncertainty of measurement y ± U，where expended uncertainty U is based on a standard uncertainty multiplied by a coverage factor of k=2，providing a level of confidence of approximately 95 %。

No.	Item	Uncertainty
1	3m camber Radiated spurious emission(9KHz-30MHz)	U=4.5dB
2	3m camber Radiated spurious emission(30MHz-1GHz)	U=4.8dB
3	3m chamber Radiated spurious emission(1GHz-6GHz)	U=4.9dB
4	3m chamber Radiated spurious emission(6GHz-40GHz)	U=5.0dB
5	Conducted disturbance	U=3.2dB
6	RF Band Edge	U=1.68dB
7	RF power conducted	U=1.86dB
8	RF conducted Spurious Emission	U=2.2dB
9	RF Occupied Bandwidth	U=1.8dB
10	RF Power Spectral Density	U=1.75dB
11	humidity uncertainty	U=5.3%
12	Temperature uncertainty	U=0.59℃

3. GENERAL INFORMATION

3.1 GENERAL DESCRIPTION OF EUT

Product Name:	Cheetah Mag
Model No.:	M001
Model Difference:	N/A
Serial No.:	N/A
Hardware version:	H1.0
Software version:	S1.0
Operation Frequency:	115kHz ~ 205KHz
Modulation type:	MSK
Antenna Type:	Inductive loop coil Antenna
Antenna gain:	0dBi
Power supply:	Input: DC 5V 3A, DC 9V 3A, DC 12V 2.92A, DC 15V 2.33A, DC 20V 1.75A Wireless Output Phone: 15W Max

3.2 Test mode

Test Modes:		
Mode 1	AC/DC Adapter (5V/3A) + EUT + Mobile Phone (15W)	
Mode 2	AC/DC Adapter (5V/3A) + EUT + Mobile Phone (10W)	
Mode 3	AC/DC Adapter (5V/3A) + EUT + Mobile Phone (7.5W)	
Mode 4	AC/DC Adapter (5V/3A) + EUT + Mobile Phone (5W)	
Mode 5	AC/DC Adapter (9V/3A) + EUT + Mobile Phone (15W)	
Mode 6	AC/DC Adapter (9V/3A) + EUT + Mobile Phone (10W)	
Mode 7	AC/DC Adapter (9V/3A) + EUT + Mobile Phone (7.5W)	
Mode 8	AC/DC Adapter (9V/3A) + EUT + Mobile Phone (5W)	
Mode 9	AC/DC Adapter (12V/2.92A) + EUT + Mobile Phone (15W)	
Mode 10	AC/DC Adapter (12V/2.92A) + EUT + Mobile Phone (10W)	
Mode 11	AC/DC Adapter (12V/2.92A) + EUT + Mobile Phone (7.5W)	
Mode 12	AC/DC Adapter (12V/2.92A) + EUT + Mobile Phone (5W)	
Mode 13	AC/DC Adapter (15V/2.33A) + EUT + Mobile Phone (15W)	
Mode 14	AC/DC Adapter (15V/2.33A) + EUT + Mobile Phone (10W)	
Mode 15	AC/DC Adapter (15V/2.33A) + EUT + Mobile Phone (7.5W)	
Mode 16	AC/DC Adapter (15V/2.33A) + EUT + Mobile Phone (5W)	
Mode 17	AC/DC Adapter (20V/1.75A) + EUT + Mobile Phone (15W)	Record
Mode 18	AC/DC Adapter (20V/1.75A) + EUT + Mobile Phone (10W)	
Mode 19	AC/DC Adapter (20V/1.75A) + EUT + Mobile Phone (7.5W)	
Mode 20	AC/DC Adapter (20V/1.75A) + EUT + Mobile Phone (5W)	
Note: All test modes were pre-tested, but we only recorded the worst case in this report.		

3.3 Block Diagram of EUT Configuration

Conducted Emission

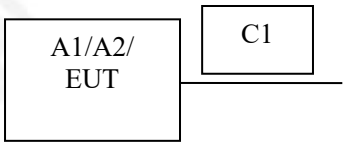

Radiated Emission

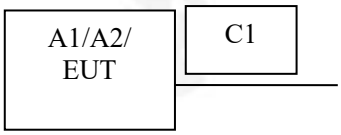

3.4 Test Conditions

Temperature: 23~26℃

Relative Humidity: 54~63 %

3.5 Description Of Support Units (Conducted Mode)

The EUT has been tested as an independent unit together with other necessary accessories or support units. The following support units or accessories were used to form a representative test configuration during the tests.

Item	Equipment	Mfr/Brand	Model/Type No.	Series No.	Note
E1	Cheetah Mag	N/A	M001	N/A	EUT
A1	Phone	Apple	DL01	N/A	Auxiliary
A2	Adapter	SAMSUNG	DL02	N/A	Auxiliary

Item	Shielded Type	Ferrite Core	Length	Note
C1	NO	NO	1.0M	DC cable unshielded

Note:

(1) The support equipment was authorized by Declaration of Confirmation.
(2) For detachable type I/O cable should be specified the length in cm in『Length』column.
(3) “YES” is means “shielded” “with core”; “NO” is means “unshielded” “without core”.

3.6 EQUIPMENTS LIST FOR ALL TEST ITEMS

Radiation Test equipment

Item	Equipment	Manufacturer	Type No.	Serial No.	Last calibration	Calibrated until
1	Spectrum Analyzer (9kHz-26.5GHz)	KEYSIGHT	9020A	MY55370835	Oct. 28, 2022	Oct. 27, 2023
2	Spectrum Analyzer (10kHz-39.9GHz)	R&S	FSQ	100363	Oct. 28, 2022	Oct. 27, 2023
3	EMI Test Receiver (9kHz-7GHz)	R&S	ESCI7	101169	Oct. 28, 2022	Oct. 27, 2023
4	Bilog Antenna (30MHz-1500MHz)	Schwarzbeck	VULB9168	N/A	Nov. 02, 2022	Nov. 01, 2023
5	Horn Antenna (1GHz-18GHz)	Agilent	AH-118	071145	Nov. 01, 2022	Oct. 31, 2023
6	Horn Antenna (15GHz-40GHz)	A.H.System	SAS-574	588	Oct. 28, 2022	Oct. 27, 2023
7	Loop Antenna	TESEQ	HLA6121	58357	Nov. 01, 2022	Oct. 31, 2023
8	Amplifier (30-1000MHz)	EM Electronics	EM330 Amplifier	060747	Nov. 15, 2022	Nov. 14, 2023
9	Amplifier (1GHz-26.5GHz)	Agilent	8449B	3008A00315	Oct. 28, 2022	Oct. 27, 2023
10	Amplifier (500MHz-40GHz)	Quanjuda	DLE-161	097	Oct. 28, 2022	Oct. 27, 2023
11	Test Cable	N/A	R-01	N/A	Oct. 28, 2022	Oct. 27, 2023
12	Test Cable	N/A	R-02	N/A	Oct. 28, 2022	Oct. 27, 2023
13	Test Cable	N/A	R-03	N/A	Oct. 28, 2022	Oct. 27, 2023
14	Magnetic Field Probe Tester	Narda	ELT-400	0-0344	Nov. 15, 2022	Nov. 14, 2023
15	D.C. Power Supply	LongWei	TPR-6405D	N/A	\	\
16	EMC Software	Frad	EZ-EMC	Ver.EMC-CON 3A1.1	\	\
17	Turntable	MF	MF-7802BS	N/A	\	\
18	Antenna tower	MF	MF-7802BS	N/A	\	\

Conduction Test equipment

Item	Kind of Equipment	Manufacturer	Type No.	Serial No.	Last calibration	Calibrated until
1	LISN	R&S	ENV216	101471	Oct. 21, 2022	Oct. 20, 2023
2	LISN	CYBERTEK	EM5040A	E1850400149	Oct. 21, 2022	Oct. 20, 2023
3	Test Cable	N/A	C-01	N/A	Oct. 21, 2022	Oct. 20, 2023
4	Test Cable	N/A	C-02	N/A	Oct. 21, 2022	Oct. 20, 2023
5	Test Cable	N/A	C-03	N/A	Oct. 21, 2022	Oct. 20, 2023
6	EMI Test Receiver	R&S	ESCI3	101393	Oct. 28, 2022	Oct. 27, 2023
7	EMC Software	Frad	EZ-EMC	Ver.EMC-CON 3A1.1	\	\

4. CONDUCTED EMISSION TEST

4.1 CONDUCTED EMISSION MEASUREMENT

Test Requirement:	FCC Part15 C Section 15.207
Test Method:	ANSI C63.10:2013
Test Frequency Range:	150KHz to 30MHz
Receiver setup:	RBW=9KHz, VBW=30KHz, Sweep time=auto

4.1.1 POWER LINE CONDUCTED EMISSION Limits

FREQUENCY (MHz)	Limit (dBuV)		Standard
	Quas-peak	Average	
0.15 -0.5	66 - 56 *	56 - 46 *	FCC
0.50 -5.0	56.00	46.00	FCC
5.0 -30.0	60.00	50.00	FCC

Note:

(1) *Decreases with the logarithm of the frequency.

4.1.2 TEST PROCEDURE

a. The EUT was placed 0.8 meters from the horizontal ground plane with EUT being connected to the power mains through a line impedance stabilization network (LISN). All other support equipments powered from additional LISN(s). The LISN provide 50 Ohm/ 50uH of coupling impedance for the measuring instrument.
b. Interconnecting cables that hang closer than 40 cm to the ground plane shall be folded back and forth in the center forming a bundle 30 to 40 cm long.
c. I/O cables that are not connected to a peripheral shall be bundled in the center. The end of the cable may be terminated, if required, using the correct terminating impedance. The overall length shall not exceed 1 m.
d. LISN at least 80 cm from nearest part of EUT chassis.
e. For the actual test configuration, please refer to the related Item –EUT Test Photos.

4.1.3 DEVIATION FROM TEST STANDARD

No deviation

4.1.4 TEST SETUP

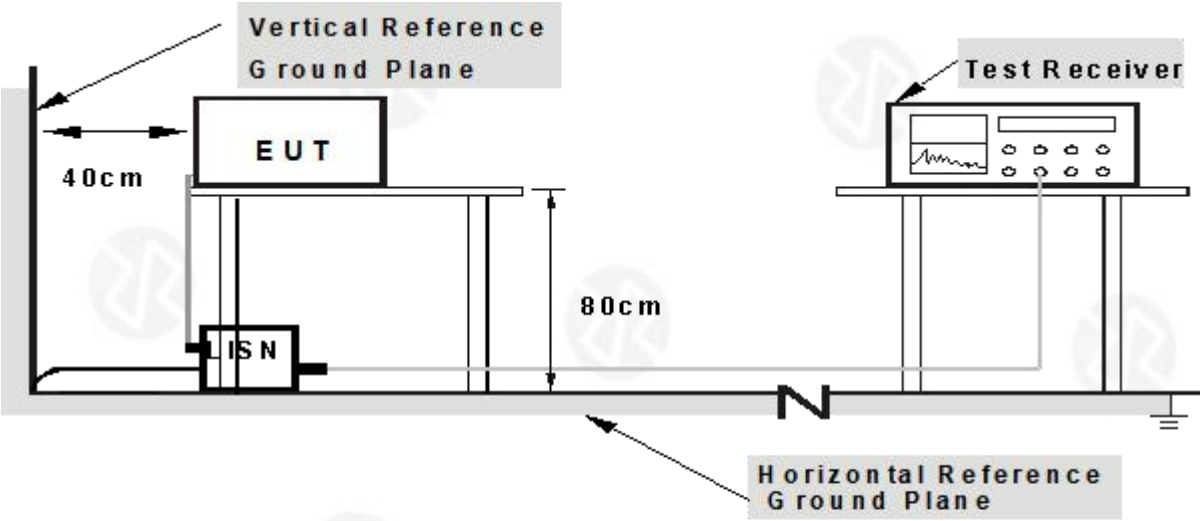

Note: 1.Support units were connected to second LISN.
2.Both of LISNs (AMN) are 80 cm from EUT and at least 80 from other units and other metal planes

4.1.5 EUT OPERATING CONDITIONS

The EUT was configured for testing in a typical fashion (as a customer would normally use it). The EUT has been programmed to continuously transmit during test. This operating condition was tested and used to collect the included data.

4.1.6 Test Result

Temperature:	26℃	Relative Humidity:	54%
Pressure:	101kPa	Phase :	L
Test Voltage :	AC 120V/60Hz		

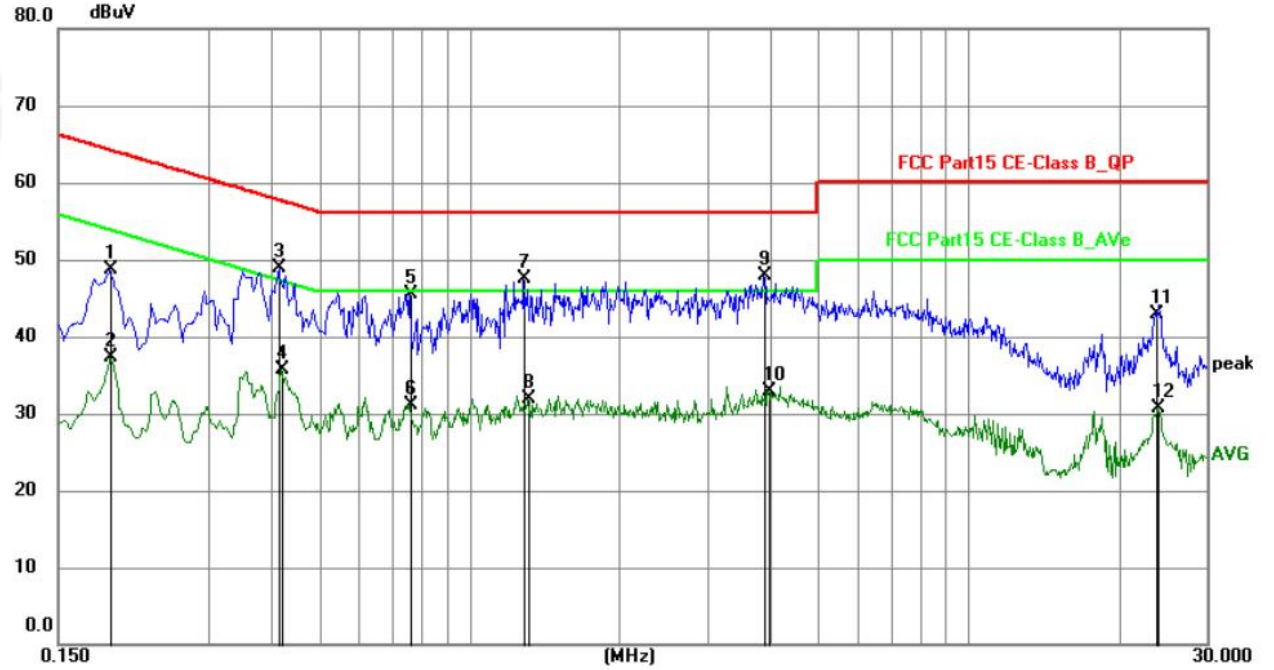

No.	Frequency (MHz)	Reading (dBuV)	Factor (dB)	Level (dBuV)	Limit (dBuV)	Margin (dB)	Detector	P/F	Remark
1	0.1905	27.99	20.65	48.64	64.01	-15.37	QP	P	
2	0.1905	16.72	20.65	37.37	54.01	-16.64	AVG	P	
3	0.4155	28.27	20.59	48.86	57.54	-8.68	QP	P	
4	0.4200	15.02	20.59	35.61	47.45	-11.84	AVG	P	
5	0.7619	24.85	20.65	45.50	56.00	-10.50	QP	P	
6	0.7619	10.52	20.65	31.17	46.00	-14.83	AVG	P	
7	1.2884	26.66	20.78	47.44	56.00	-8.56	QP	P	
8	1.3154	11.15	20.79	31.94	46.00	-14.06	AVG	P	
9	3.8850	26.99	20.85	47.84	56.00	-8.16	QP	P	
10	3.9705	12.06	20.85	32.91	46.00	-13.09	AVG	P	
11	23.7075	21.16	21.78	42.94	60.00	-17.06	QP	P	
12	23.9415	8.89	21.80	30.69	50.00	-19.31	AVG	P	

Notes:
1.An initial pre-scan was performed on the line and neutral lines with peak detector.
2.Quasi-Peak and Average measurement were performed at the frequencies with maximized peak emission.
3.Mesurement Level = Reading level + Correct Factor

Temperature:	26℃	Relative Humidity:	54%
Pressure:	101kPa	Phase :	N
Test Voltage :	AC 120V/60Hz		

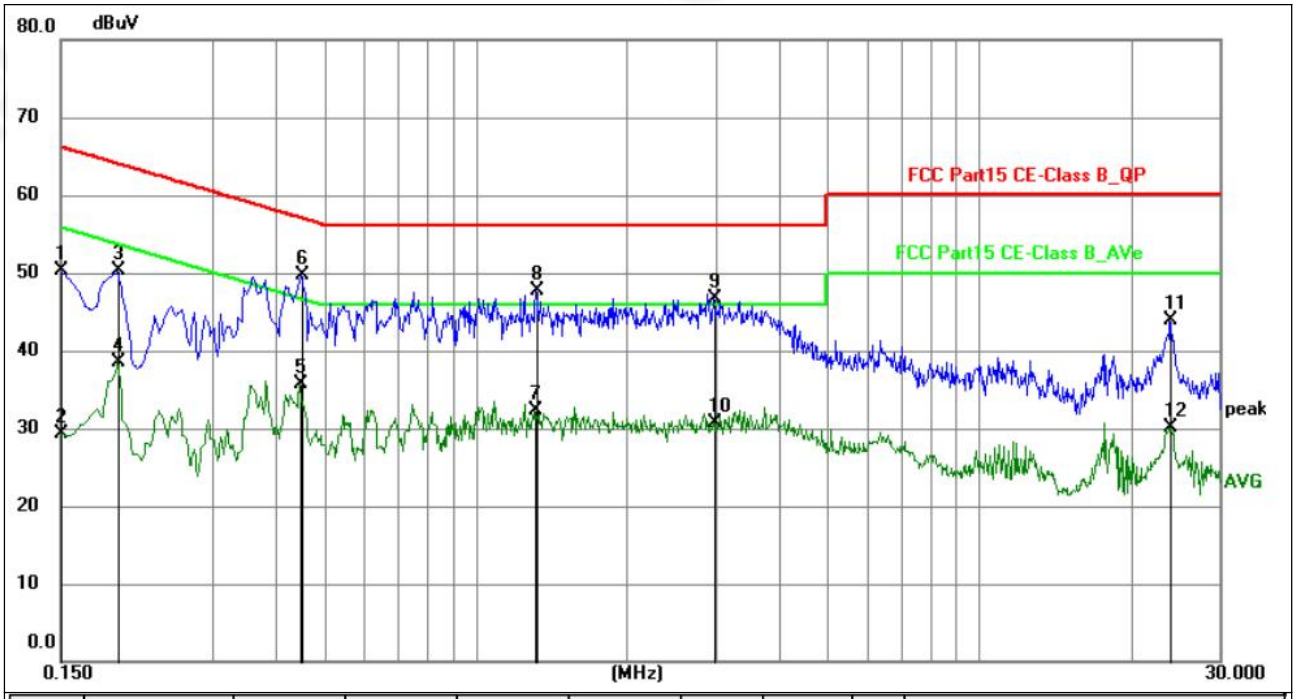

No.	Frequency (MHz)	Reading (dBuV)	Factor (dB)	Level (dBuV)	Limit (dBuV)	Margin (dB)	Detector	P/F	Remark
1	0.1500	29.71	20.58	50.29	66.00	-15.71	QP	P	
2	0.1500	8.75	20.58	29.33	56.00	-26.67	AVG	P	
3	0.1949	29.45	20.77	50.22	63.83	-13.61	QP	P	
4	0.1949	17.83	20.77	38.60	53.83	-15.23	AVG	P	
5	0.4470	14.95	20.71	35.66	46.93	-11.27	AVG	P	
6	0.4515	28.95	20.71	49.66	56.85	-7.19	QP	P	
7	1.3154	11.45	20.82	32.27	46.00	-13.73	AVG	P	
8	1.3200	26.83	20.82	47.65	56.00	-8.35	QP	P	
9	2.9670	25.72	20.91	46.63	56.00	-9.37	QP	P	
10	2.9670	9.89	20.91	30.80	46.00	-15.20	AVG	P	
11	23.9189	22.14	21.74	43.88	60.00	-16.12	QP	P	
12	23.9189	8.46	21.74	30.20	50.00	-19.80	AVG	P	

Notes:
1.An initial pre-scan was performed on the line and neutral lines with peak detector.
2.Quasi-Peak and Average measurement were performed at the frequencies with maximized peak emission.
3.Mesurement Level = Reading level + Correct Factor

5. RADIATED EMISSION MEASUREMENT

Test Requirement:	FCC Part15 C Section 15.209
Test Method:	ANSI C63.10:2013
Test Frequency Range:	9kHz to 1GHz
Test site:	Measurement Distance: 3m
Receiver setup:	

Frequency	Detector	RBW	VBW	Value
9KHz-150KHz	Quasi-peak	200Hz	600Hz	Quasi-peak
150KHz-30MHz	Quasi-peak	9KHz	30KHz	Quasi-peak
30MHz-1GHz	Quasi-peak	100KHz	300KHz	Quasi-peak
Above 1GHz	Peak	1MHz	3MHz	Peak
	Peak	1MHz	10Hz	Average

5.1 Radiated Emission Limits

Limits for frequency below 30MHz

Frequency	Limit (uV/m)	Measurement Distance(m)	Remark
0.009-0.490	2400/F(kHz)	300	Quasi-peak Value
0.490-1.705	24000/F(kHz)	30	Quasi-peak Value
1.705-30	30	30	Quasi-peak Value

Limits for frequency Above 30MHz

Frequency	Limit (dBuV/m @3m)	Remark
30MHz-88MHz	40.00	Quasi-peak Value
88MHz-216MHz	43.50	Quasi-peak Value
216MHz-960MHz	46.00	Quasi-peak Value
960MHz-1GHz	54.00	Quasi-peak Value
Above 1GHz	54.00	Average Value
	74.00	Peak Value

5.2 Anechoic Chamber Test Setup Diagram

（A）Radiated Emission Test-Up Frequency Below 30MHz

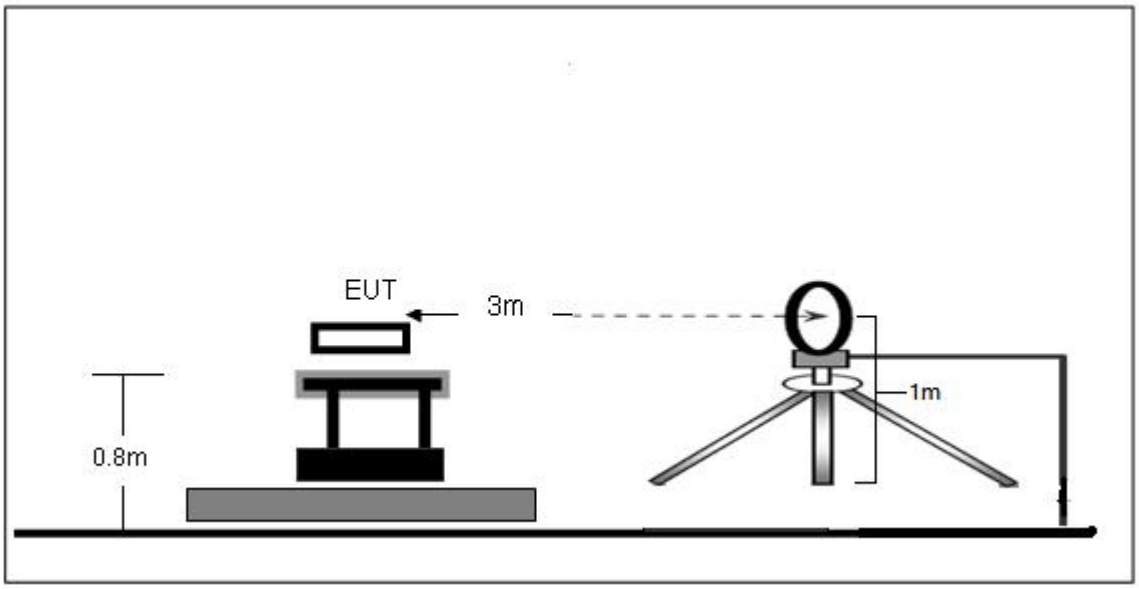

（B）Radiated Emission Test-Up Frequency 30MHz~1GHz

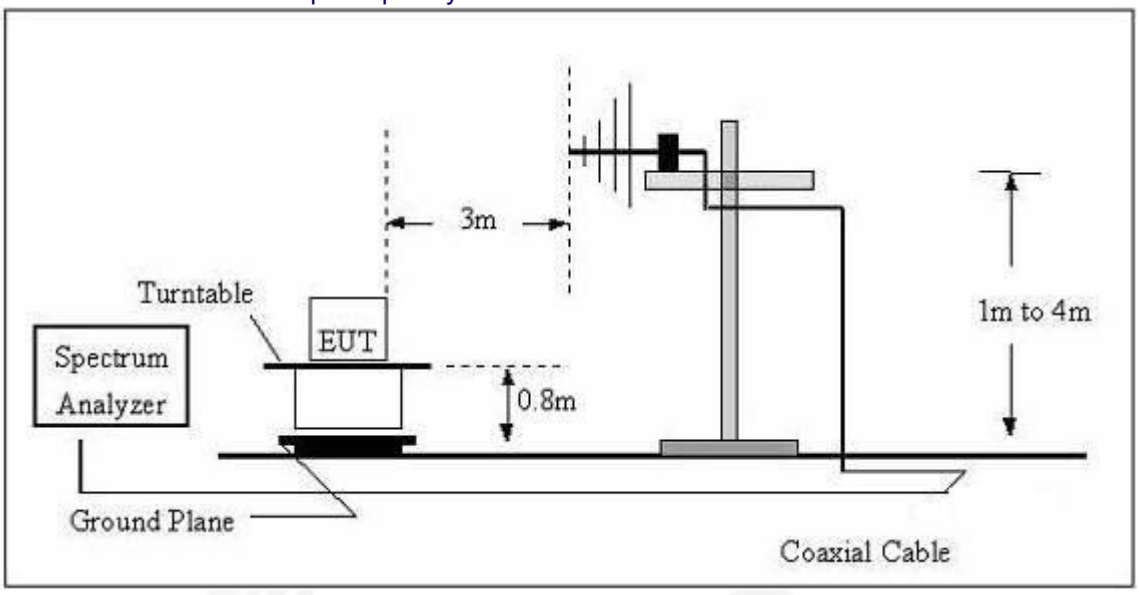

The radiated emission tests were performed in the 3 meters chamber test site, using the setup accordance with the ANSI C63.10-2013. The specification used was the FCC 15.209 and FCC 15.205 limits.

5.3 Test Procedure

The EUT is placed on a turn table which is 0.8 meter above ground. The turn table can rotate 360 degrees to determine the position of the maximum emission level. The EUT is set 3 meters away from the receiving antenna which is mounted on a antenna tower. The antenna can move up and down between 1 to 4 meters to find out the maximum emission level. Broadband antenna (calibrated by dipole antenna) are used as a receiving antenna. Both horizontal and vertical polarization of the antenna are set on measurement.

5.4 DEVIATION FROM TEST STANDARD

No deviation

5.5 Test Result

Measurement data:

Note: Limit dBuV/m @3m = Limit dBuV/m @300m+ 80
Limit dBuV/m @3m = Limit dBuV/m @30m + 40

9 kHz~30 MHz

Frequency	Meter Reading	Factor	Emission Level	Limits	Margin	Detector Type
(kHz)	(dBμV)	(dB)	(dBμV/m)	(dBμV/m)	(dB)	
25.67	38.35	20.15	58.5	119.39	-60.89	AV
56.27	31.26	20.33	51.59	112.51	-60.92	AV
134.92	56.56	20.11	76.67	104.94	-28.27	AV
684.321	29.31	20.64	49.95	70.88	-20.93	QP
964.232	27.28	21.26	48.54	67.92	-19.38	QP
1218.16	25.99	22.32	48.31	65.9	-17.59	QP

Note:
Pre-scan in the all of mode, the worst case in of was recorded.
Factor = antenna factor + cable loss – pre-amplifier.
Margin = Emission Level- Limit.

30MHz-1GHz

Temperature:	26℃	Relative Humidity:	54%
Pressure:	101 kPa	Polarization:	Horizontal
Test Voltage:	AC 120V/60Hz		

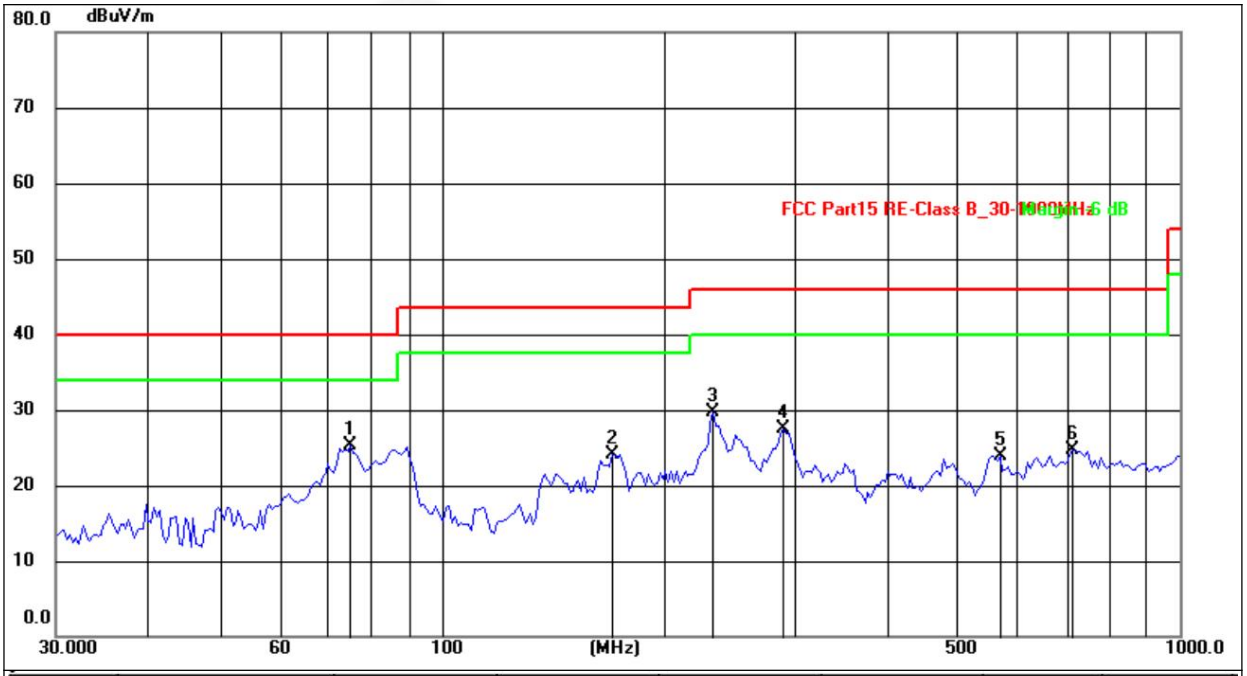

No.	Frequency (MHz)	Reading (dBuV)	Factor (dB/m)	Level (dBuV/m)	Limit (dBuV/m)	Margin (dB)	Detector
1	75.3139	43.65	-18.26	25.39	40.00	-14.61	QP
2	170.1947	41.23	-17.04	24.19	43.50	-19.31	QP
3	233.3486	46.43	-16.78	29.65	46.00	-16.35	QP
4	290.5260	43.26	-15.73	27.53	46.00	-18.47	QP
5	570.6100	33.56	-9.65	23.91	46.00	-22.09	QP
6	716.6820	31.43	-6.74	24.69	46.00	-21.31	QP

Temperature:	26℃	Relative Humidity:	54%
Pressure:	101kPa	Polarization:	Vertical
Test Voltage:	AC 120V/60Hz		

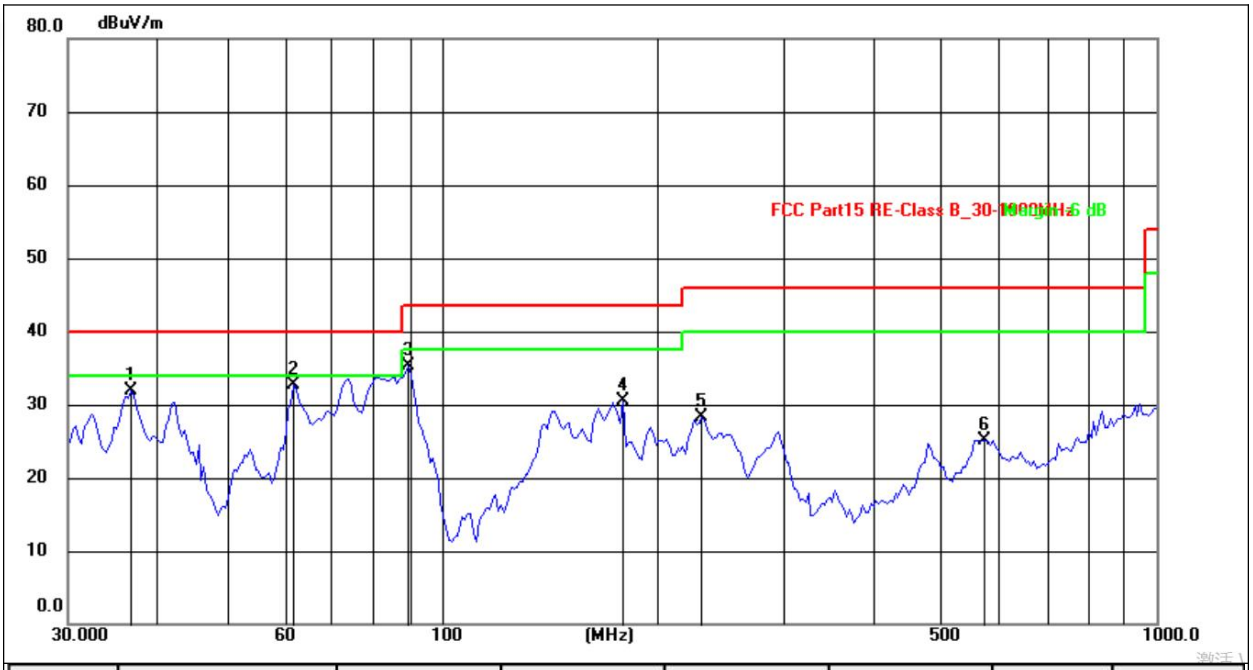

No.	Frequency (MHz)	Reading (dBuV)	Factor (dB/m)	Level (dBuV/m)	Limit (dBuV/m)	Margin (dB)	Detector
1	36.7017	49.29	-17.35	31.94	40.00	-8.06	QP
2	62.1037	51.27	-18.53	32.74	40.00	-7.26	QP
3	89.7471	56.84	-21.51	35.33	43.50	-8.17	QP
4	179.3863	50.32	-19.85	30.47	43.50	-13.03	QP
5	231.3119	48.66	-20.32	28.34	46.00	-17.66	QP
6	575.6340	33.88	-8.70	25.18	46.00	-20.82	QP

Remarks:
1.Final Level =Receiver Read level + Antenna Factor + Cable Loss – Preamplifier Factor
2.The emission levels of other frequencies are very lower than the limit and not show in test report.

6. BANDWIDTH TEST

1. Set RBW = 100Hz.
2. Set the video bandwidth (VBW) ≥ 3 x RBW.
3. Detector = Peak.
4. Trace mode = max hold.
5. Sweep = auto couple.
6. Allow the trace to stabilize.
7. Measure the maximum width of the emission that is constrained by the frequencies associated with the two outermost amplitude points (upper and lower frequencies) that are attenuated by 20 dB relative to the maximum level measured in the fundamental emission.

TEST SETUP

Temperature:	26 ℃	Relative Humidity:	54%
Pressure:	101kPa		

Frequency (KHz)	20dB bandwidth (Hz)	99% bandwidth (Hz)	Result
131.598	54	183	Pass

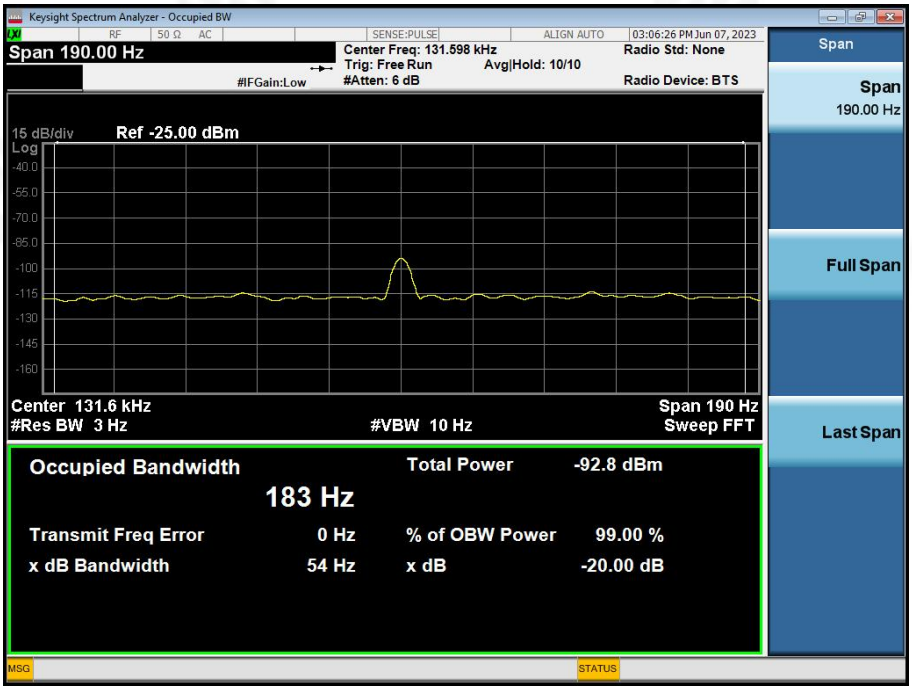

7. ANTENNA REQUIREMENT

Standard requirement:	FCC Part15 C Section 15.203
15.203 requirement: An intentional radiator shall be designed to ensure that no antenna other than that furnished by the responsible party shall be used with the device. The use of a permanently attached antenna or of an antenna that uses a unique coupling to the intentional radiator, the manufacturer may design the unit so that a broken antenna can be replaced by the user, but the use of a standard antenna jack or electrical connector is prohibited.	
EUT Antenna:	
The antenna is Coil ANT, the best case gain of the antennas is 0dBi, reference to the appendix II for details	

8. TEST SETUP PHOTO

Reference to the appendix I for details.

9. EUT CONSTRUCTIONAL DETAILS

Reference to the appendix II for details.

※※※※※ END OF REPORT ※※※※※