LYNX-R1

USER MANUAL

It is recommended that users also read the associated document: Lynx_safety

Lynx-R1 box content:

A. Usb Type C charging Cable
B. Overhead Detachable Strap
C. Lynx-R1 Mixed Reality Headset
D. Magnetic Comfort Foam (Back of head)
E. Magnetic Comfort Foam (Forehead)
F. Magnetic VR Facial Interface (Lightblocker)

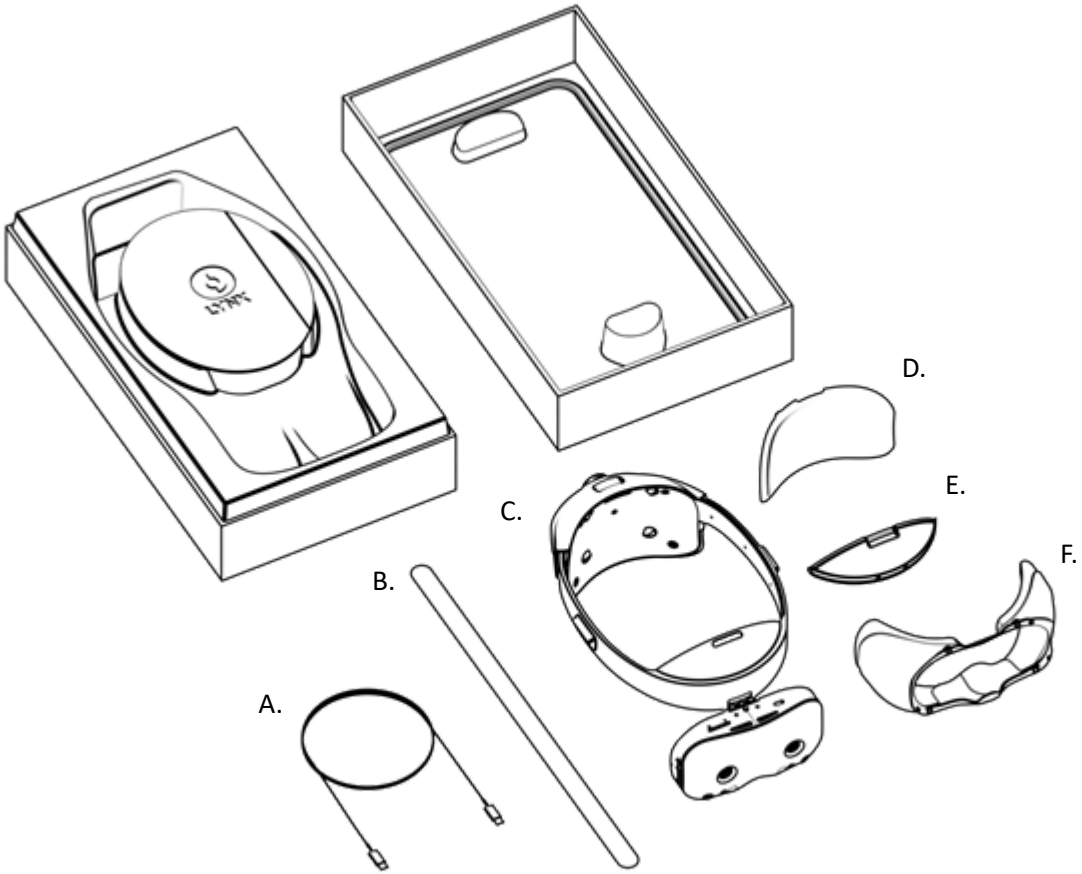

Setup for immersive virtual reality experience:

To fully feel immerse yourself into a virtual reality experience, the Lynx-R1 comes with a magnetic facial interface (or “Face Foam”) that will obstruct your peripheral vision for a better immersion. The Face Foam is equipped with magnets and it will clip itself to the Lynx-R1 headset when in proximity and is designed to accommodate users with, or without glasses.

Note: it is not recommended to use the Face Foam during an augmented reality experience as it will break the continuity between the Lynx-r1 display and your peripheral vision.

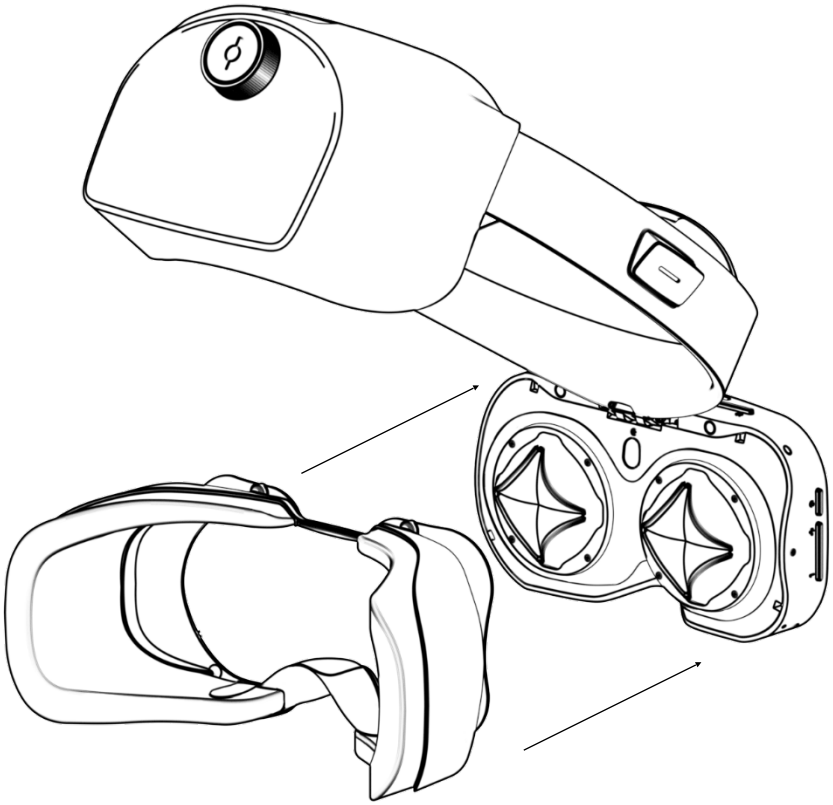

In and out connections:

USB type C connector:
- This connector is used to charge the device. The Lynx-R1 comes with its charging cable, it is recommended to use a 30W or above charger, this will minimise the charging time required.
- It is also used to connect your Lynx-R1 with your computer and create a connection for further management, please refer to the online portal for more information.

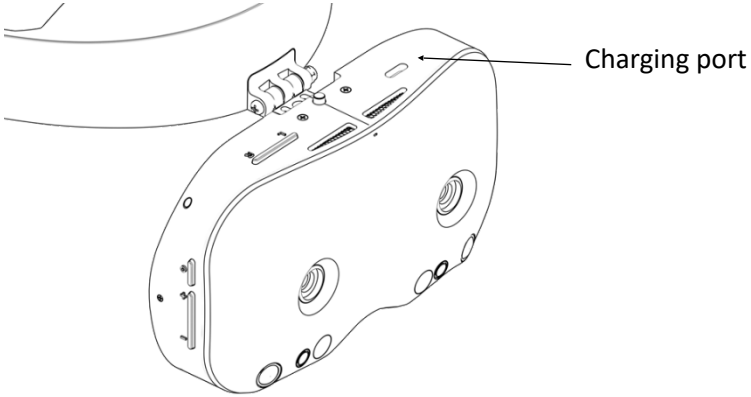

Audio jack 3.5mm:
Can be used to connect standard audio earphones and microphone using jack 3.5mm.

MicroSD slot:
You can insert an extra memory card using that slot to improve storage capacity. After inserting the memory card press it again to eject it from its slot.

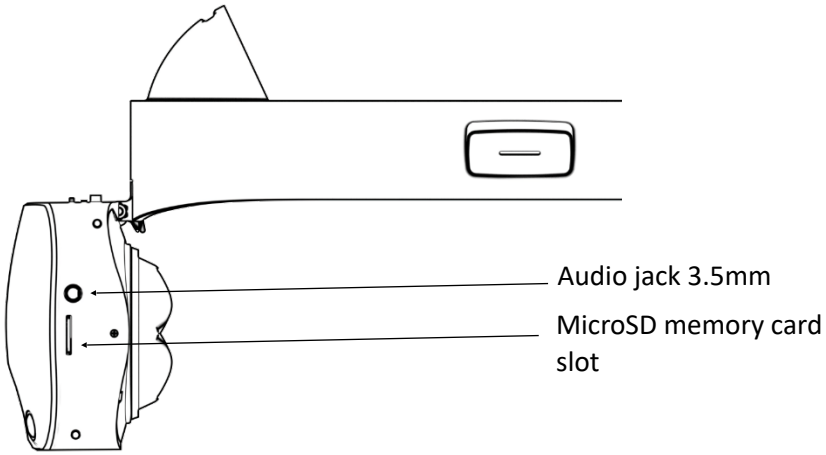

Adjusting the Lynx-R1:

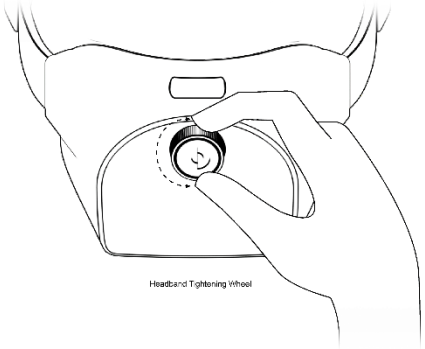

1. After placing the Lynx-R1 on your head, adjust the headband tightness by turning the adjustment wheel at the back of the device.

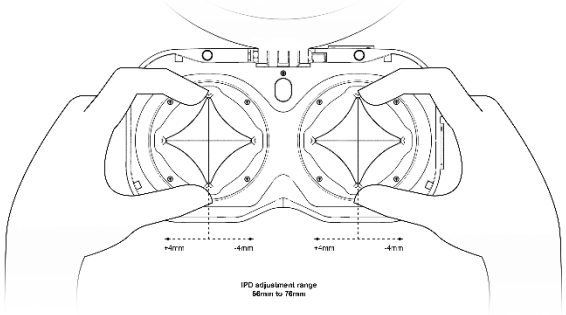

2. Move the lenses left and right manually to adjust the device to your inter-pupilary distance ; making sure they are place properly in front your eyes.

Tip: if lenses not well aligned you will see a vertical line during the experience, which will disappear once the lenses are well adjusted to your eyes.

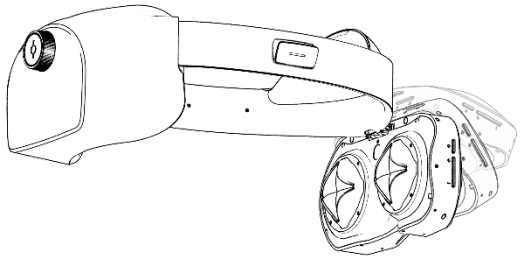

3. Flip up and down the Lynx-R1 front part so the screens are parallel to your face.

Tip: if the front part is not well positioned, you will see a horizontal line during the experience, which will disappear once the front part is angled correctly in front of your face.

Using the Lynx-R1:

When wearing the Lynx-R1 you will find on the right side of the face plate both power button and volume buttons.

To turn on the Lynx-R1 press one time on the power button, the Lynx logo will appear and you will enter the Lynx environment.

You can adjust the volume by pressing volume + button and volume -.

The L and R button present on top of the device do not have pre-defined actions. Those buttons can be used by developers and actions will be specified by the developers.

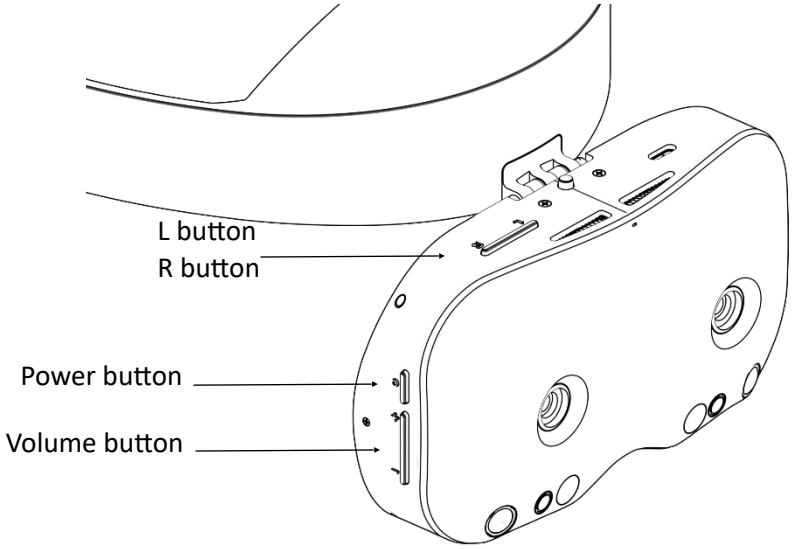

After entering the Lynx environment you can place your hands in front of the headset, they will be detected and tracked. You can interact directly with the virtual environment using your hands. Press the power button again to turn off the Lynx-R1.

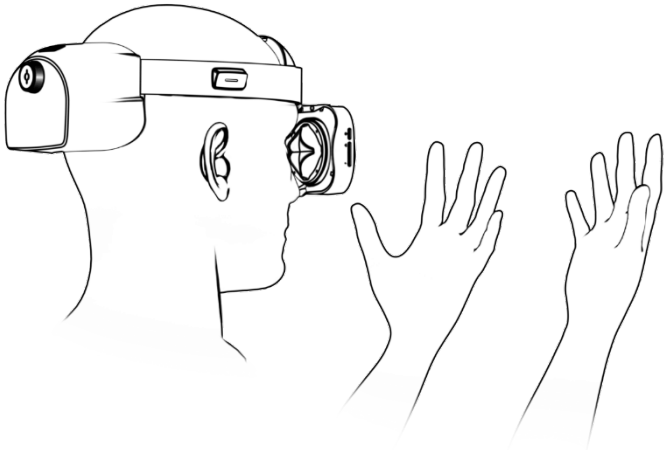

Thank you for choosing LYNX-R1

To learn more about SL process products, please visit official website: **https://www.lynx-r.com/en-fr**

Lynx-R1 SDK is available on the developper portal: **https://portal.lynx-r.com/**