EUROFINS ELECTRICAL TESTING SERVICE (SHENZHEN) CO., LTD.

RADIO TEST - REPORT

FCC&ISED Compliance Test Report for

Product name: Evaporative humidifier

Model name: ME440DGRY8

FCC ID: 2BBLC-ME440DGRY8
IC: 30761-ME440DGRY8

Test Report Number: EFGX23060081-IE-01-E02

Eurofins Electrical Testing Service (Shenzhen) Co., Ltd.
1st Floor, Building 2, Chungu, Meisheng Huigu Science and Technology Park,
No. 83 Dabao Road, Bao'an District, Shenzhen. P.R.China

Phone: +86-0755-829118671
Fax: +86-0755-82910749

1	**General Information**	**3**
1.1	Notes	3
1.2	Testing laboratory	4
1.3	Details of applicant	4
1.4	Details of manufacturer	4
1.5	Application details	5
1.6	Test item	5
1.7	Test standards	6
2	**Technical test**	**7**
2.1	Summary of test results	7
2.2	Test environment	7
2.3	Measurement uncertainty	7
2.4	Test mode	8
2.5	Test equipment utilized	9
2.6	Auxiliary equipment used during test	10
2.7	Test software information	10
2.8	Test setup	11
2.9	Test results	13
3	**Technical Requirement**	**14**
3.1	Conducted emission AC power port	14
3.2	Duty cycle	15
3.3	6dB bandwidth	16
3.4	99% Occupied Bandwidth	17
3.6	Conducted Peak output power	18
3.7	Power spectral density	19
3.8	Conducted Spurious Emissions	20
3.9	Band edge	21
3.10	Spurious radiated emissions for transmitter	24
4	**Test Setup Photos**	**27**
5	**External Photo**	**27**
6	**Internal Photos**	**27**
7	**Appendix**	**27**

1 General Information

1.1 Notes

The results of this test report relate exclusively to the item tested as specified in chapter “Description of test item” and are not transferable to any other test items.

Eurofins Electrical Testing Service (Shenzhen) Co., Ltd. is not responsible for any generalisations and conclusions drawn from this report. Any modification of the test item can lead to invalidity of test results and this test report may therefore be not applicable to the modified test item.

The test report may only be reproduced or published in full. Reproducing or publishing extracts of the report requires the prior written approval of the Eurofins Electrical Testing Service (Shenzhen) Co., Ltd.

This document is subject to the General Terms and Conditions and the Testing and Certification System of Eurofins Electrical Testing Service (Shenzhen) Co., Ltd., available on request or accessible at www.eurofins.com.

Operator:

2023-07-07		Bruce Zheng / Project Engineer	Bruce Zheng
Date	Eurofins-Lab.	Name / Title	Signature

Technical responsibility for area of testing:

2023-07-07		Albert Xu / Lab Manager	Albert Xu
Date	Eurofins	Name / Title	Signature

1.2 Testing laboratory

Eurofins Electrical Testing Service (Shenzhen) Co., Ltd.
1st Floor, Building 2, Chungu, Meisheng Huigu Science and Technology Park, No. 83 Dabao Road, Bao'an District, Shenzhen. P.R.China.
Telephone : +86-755-82911867
Fax : +86-755-82910749
The Laboratory has passed the Accreditation by the American Association for Laboratory Accrediation (A2LA). The Accreditation number is 5376.01
The Laboratory has been listed by industry Canada to perform electromagnetic emission measurements, The CAB identifier is CN0088

1.3 Details of applicant

Name	:	Essick Air Products
Address	:	5800 Murray Street, Little Rock, AR 72209
Telephone	:	./.
Fax	:	./.

1.4 Details of manufacturer

Name	:	Comefresh(Xiamen) Electronic Co., Ltd.
Address	:	F2-4, No.35, Xiangyue Road, Xiang'an District, Xiamen, Fujian, P.R.China
Telephone	:	./.
Fax	:	./.

1.5 Application details

Date of receipt of application	:	2023-06-02
Date of receipt of test item	:	2023-06-02
Date of test	:	2023-06-02 to 2023-06-20
Date of issue	:	2023-07-07

1.6 Test item

Product name	:	Evaporative humidifier
Sample ID	:	230531-15-002
Model name	:	ME440DGRY8
Serial number	:	./.
Hardware Version	:	CF-6158-01_V1.1
Software / Firmware Version	:	CA51F253L3_64PIN_6158S_EA_FW_V1.0
Ratings	:	DC 24V with detachable power supply unit. (Power supply model: IVP2400-0500W Input: AC 100-240V, 50/60Hz, 0.5A Output: DC 24V, 0.5A)
Test voltage	:	AC 120V, 60Hz
FCC ID	:	2BBLC-ME440DGRY8
IC	:	30761-ME440DGRY8
PMN	:	Evaporative humidifier
HVIN	:	ME440DGRY8

RadioTechnical data

Frequency range	:	2402MHz – 2480MHz
Radio Tech.	:	Bluetooth Low Energy
Frequency channel	:	40 Channels
Modulation	:	GFSK
Antenna type	:	PCB antenna
Antenna gain	:	2.54 dBi
Additional information	:	./.

The above sample(s) and sample information was/were submitted and identified on behalf of the applicant.
Eurofins assures objectivity and impartiality of the test, and fulfills the obligation of confidentiality for applicant's commercial information and technical documents.

1.7 Test standards

Test Standards	
FCC Part 15 Subpart C	PART 15 - RADIO FREQUENCY DEVICES Subpart C - Intentional Radiators
RSS-247	RSS-247 — Digital Transmission Systems (DTSs), Frequency Hopping Systems (FHSs) and Licence-Exempt Local Area Network (LE-LAN) Devices
RSS-GEN	RSS-Gen — General Requirements for Compliance of Radio Apparatus

Test Method
1: ANSI C63.4-2014, American National Standard for Methods of Measurement of Radio-Noise Emissions from Low-Voltage Electrical and Electronic Equipment in the Range of 9 kHz to 40 GHz.
2: ANSI C63.10-2013, American National Standard for Testing Unlicensed Wireless Devices.
3: KDB558074 D01 15.247 Meas Guidance v05r02

2 Technical test

2.1 Summary of test results

No deviations from the technical specification(s) were ascertained in the course of the tests performed. ☒

or

The deviations as specified were ascertained in the course of the tests performed. ☐

2.2 Test environment

Ac line conducted

Enviroment Parameter	Temperature	Relative Humidity
101.2kPa	23.7 ℃	61.3%

RF conducted

Enviroment Parameter	Temperature	Relative Humidity
101.2kPa	24.7 ℃	43.1%

Radiated

Enviroment Parameter	Temperature	Relative Humidity
101.2kPa	24.3 ℃	51.6%

2.3 Measurement uncertainty

The uncertainty is calculated using the methods suggested in the "Guide to the Expression of Uncertainty in Measurement" (GUM) published by ISO.

System Measurement Uncertainty	
Test Items	Extended Uncertainty
Uncertainty in conducted measurements	1.96dB
Uncertainty for Conducted RF test	RF Power Conducted: 1.16dB Frequency test involved: 1.05×10-7 or 1%
Uncertainty for Radiated Spurious Emission 25MHz-3000MHz	Horizontal: 4.46dB; Vertical: 4.54dB;
Uncertainty for Radiated Spurious Emission 3000MHz-18000MHz	Horizontal: 4.42dB; Vertical: 4.41dB;
Uncertainty for Radiated Spurious Emission 18000MHz-40000MHz	Horizontal: 4.63dB; Vertical: 4.62dB;

2.4 Test mode

40 channels are provided for BT-LE (GFSK):

CHANNEL	FREQ. (MHZ)	CHAN-NEL	FREQ. (MHZ)	CHAN-NEL	FREQ. (MHZ)	CHAN-NEL	FREQ. (MHZ)
0	2402	10	2422	20	2442	30	2462
1	2404	11	2424	21	2444	31	2464
2	2406	12	2426	22	2446	32	2466
3	2408	13	2428	23	2448	33	2468
4	2410	14	2430	24	2450	34	2470
5	2412	15	2432	25	2452	35	2472
6	2414	16	2434	26	2454	36	2474
7	2416	17	2436	27	2456	37	2476
8	2418	18	2438	28	2458	38	2478
9	2420	19	2440	29	2460	39	2480

The EUT was set at continuously transmitting mode during the test.
The Lowest Channel 0, Middle 19 and Highest 39 were selected for test in the report.

2.5 Test equipment utilized

EQUIPMENT ID	EQUIPMENT NAME	MODEL NO.	CAL. DUE DATE
23-2-13-05	EMI Test Receiver	ESR3	2024-03-21
23-2-13-06	LISN	NNLK 8127 RC	2024-03-21
23-2-10-16	Attenuator	VTSD 9561-F	2024-03-21
23-2-10-63	Temperature & Humidity Meter	COS-03	2024-03-21
23-2-10-65	Barometer	Baro	2024-03-21
23-2-13-12	Signal Analyzer	N9010B-544	2024-03-21
23-2-13-13	BT/WLAN Tester	CMW270	2024-03-21
23-2-13-14	Signal Generator	N5183B-520	2024-03-21
23-2-13-15	Vector Signal Generator	N5182B-506	2024-03-21
23-2-10-43	Switch and Control Unit	ERIT-E-JS0806-2	2024-03-21
23-2-10-44	DC power supply	E3642A	2024-03-21
23-2-10-45	Temperature test chamber	SG-80-CC-2	2024-03-21
23-2-10-50	Temperature & Humidity Meter	COS-03	2024-03-21
23-2-10-66	Barometer	Baro	2024-03-21
23-2-13-01	EMI Test Receiver	ESR7	2024-03-21
23-2-13-02	Signal Analyzer	N9020B-544	2024-03-21
23-2-12-01	Active Loop Antenna	FMZB 1519B	2024-03-21
23-2-12-02	TRILOG Broadband Antenna	VULB9168	2024-05-29
23-2-12-03	Horn Antenna	3117	2024-05-29
23-2-12-04	Horn Antenna	BBHA 9170	2024-05-29
23-2-10-01	Preamplifier	BBV9745	2024-03-21
23-2-10-02	Preamplifier	TAP01018048	2024-03-21
23-2-10-03	Preamplifier	TAP18040048	2024-03-21
23-2-10-62	Temperature & Humidity Meter	COS-03	2024-03-21
23-2-10-64	Barometer	Baro	2024-03-21
23-2-10-14	Switch and Control Unit	ERIT-E-JS0806-SF1	N/A
23-2-13-03	EMI Test Receiver	ESR7	2024-03-21
23-2-13-04	Signal Analyzer	N9020B-526	2024-03-21
23-2-12-06	Active Loop Antenna	FMZB 1519B	2024-05-05
23-2-12-07	TRILOG Broadband Antenna	VULB9168	2024-05-05
23-2-12-08	Horn Antenna	3117	2024-05-05
23-2-10-46	Preamplifier	BBV9745	2024-03-21
23-2-10-47	Preamplifier	TAP01018048	2024-03-21
23-2-10-61	Temperature & Humidity Meter	COS-03	2024-03-21
23-2-10-52	Barometer	Baro	2024-03-21
23-2-10-15	Switch and Control Unit	ERIT-E-JS0806-SF1	N/A

2.6 Auxiliary equipment used during test

DESCRIPTION	MANUFACTURER	MODEL NO.	S/N
Laptop	LENOVO	TP00096A	PF-1QH0LV

2.7 Test software information

Test Software&Version	RTLBTAPP		
Mode	Power setting	TX Pattern	Modulation Type
BLE	DEF	PRBS9	GFSK

2.8 Test setup

Ac line conducted

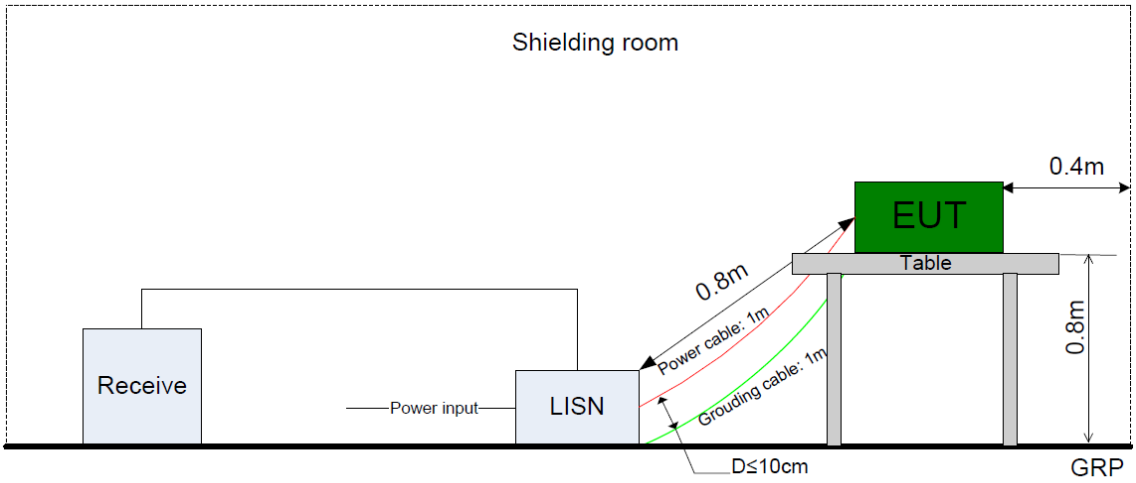

RF Conducted tests

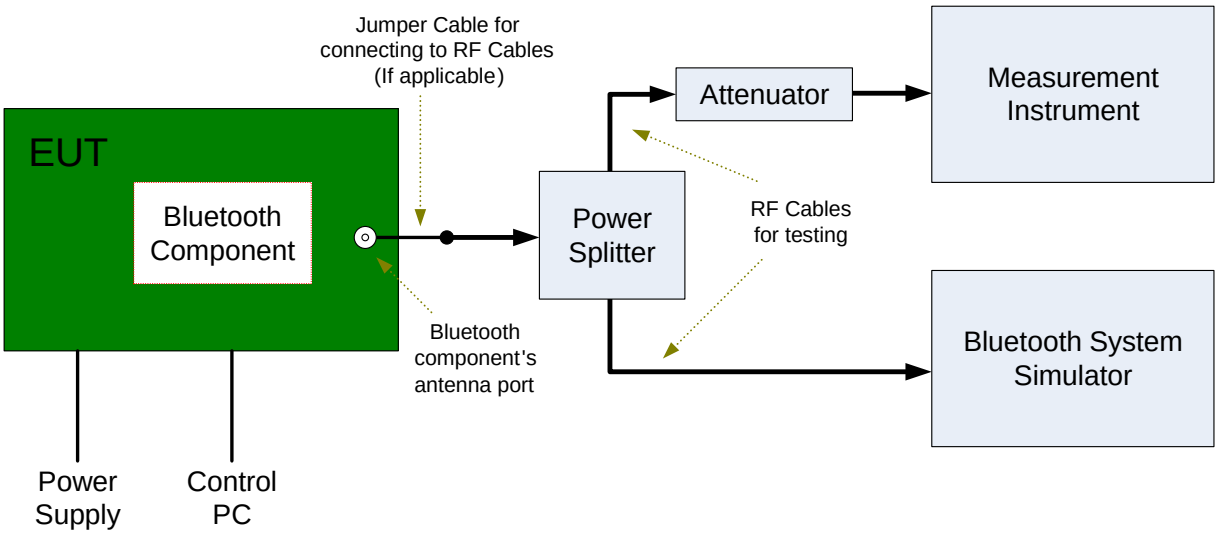

Radiated tests below 30MHz

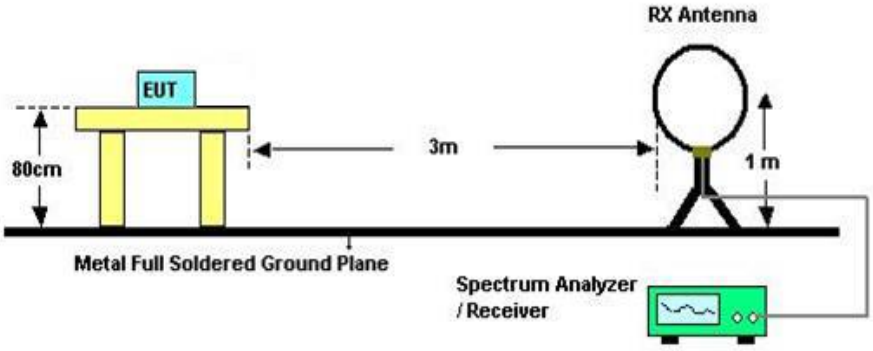

Radiated tests below 1GHz

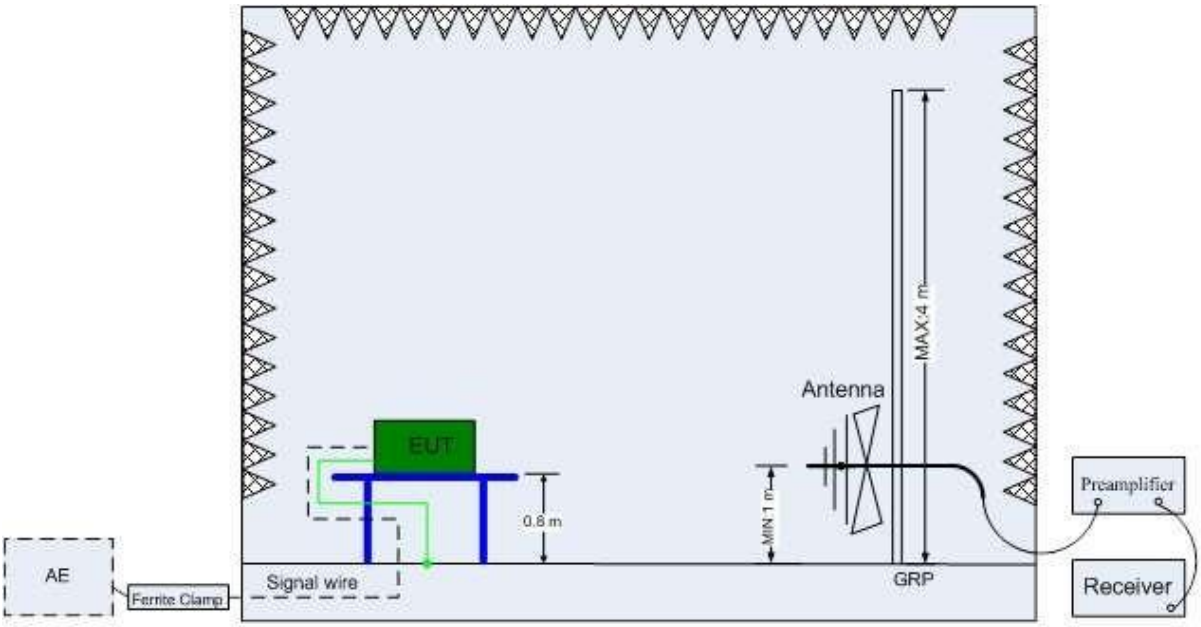

Radiated tests above 1GHz

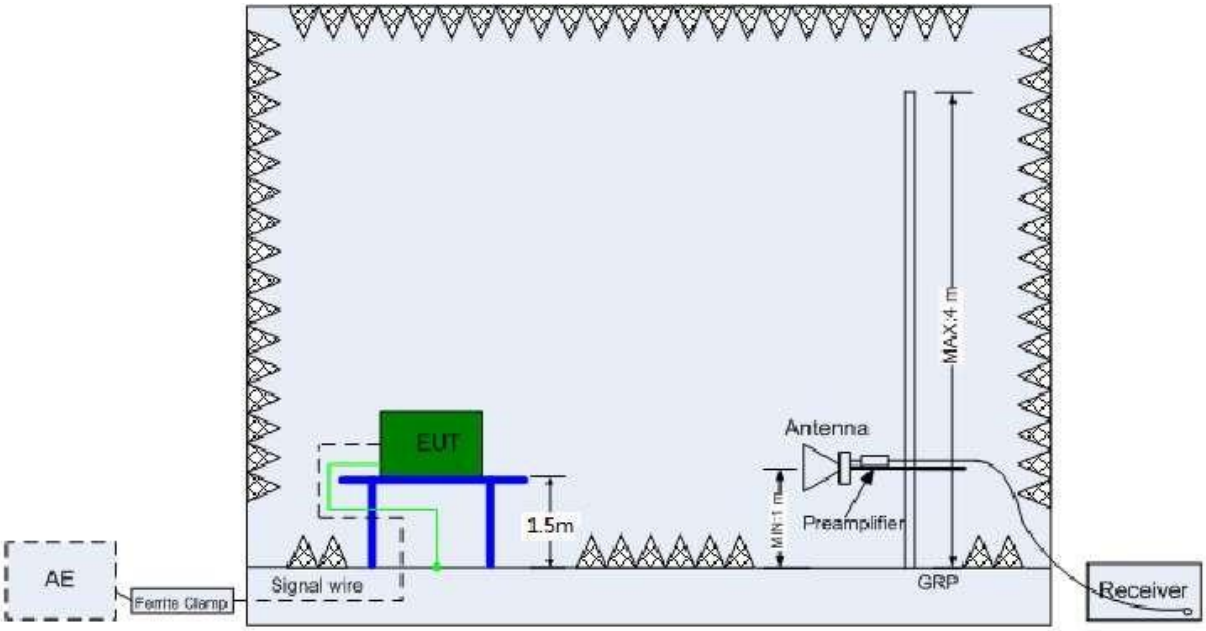

2.9 Test results

☒ 1st test ☐ test after modification ☐ production test

Technical Requirements					
FCC Part 15 Subpart C/RSS-247 Issue 2/RSS-Gen Issue 5					
Test Condition			Test Result	Verdict	Test Site
§15.207	RSS-GEN 8.8	Conducted emission AC power port	Appendix J	Pass	Site 1
§15.247(b)(1)	RSS-247 Clause 5.4(b)	Conducted output power for FHSS	--	N/A	--
§15.247(b)(3)	RSS-247 Clause 5.4(d)	Conducted output power for DTS	Appendix C	Pass	Site 1
§15.247(e)	RSS-247 Clause 5.2(b)	Power spectral density	Appendix D	Pass	Site 1
§15.247(a)(2)	RSS-247 Clause 5.2(a)	6dB bandwidth	Appendix A	Pass	Site 1
§15.247(a)(1)	RSS-247 Clause 5.1(a)	20dB Occupied bandwidth	--	N/A	--
--	RSS-GEN 6.7	99% Occupied Bandwidth	Appendix B	Pass	Site 1
§15.247(a)(1)	RSS-247 Clause 5.1(b)	Carrier frequency separation	--	N/A	--
§15.247(a)(1)(iii)	RSS-247 Clause 5.1(d)	Number of hopping frequencies	--	N/A	--
§15.247(a)(1)(iii)	RSS-247 Clause 5.1(d)	Dwell Time	--	N/A	--
§15.247(d)	RSS-247 Clause 5.5	Conducted Band Edge & Conducted Spurious Emissions	Appendix E Appendix F	Pass	Site 1
§15.209 & §15.205	RSS-GEN 8.9 RSS-GEN 8.10	Spurious emissions , Band edge & Restricted Band	Appendix H Appendix I	Pass	Site 1
--	--	Duty cycle	Appendix G	Pass	Pass
§15.203	RSS-GEN 6.8	Antenna requirement	See note 1	Pass	--

Remark 1: N/A – Not Applicable.
Note 1: The EUT uses an PCB antenna, the gain: 2.54 dBi. According to §15.203, it is considered sufficiently to comply with the provisions of this section.

3 Technical Requirement

3.1 Conducted emission AC power port

Test Method:
The test method was refered to the subclause 6.2 of ANSI C63.10-2013.

The EUT is placed on a non-conducting table 40 cm from the vertical ground plane and 80 cm above the horizontal ground plane. The EUT is configured in accordance with ANSI C63.10.

The receiver is set to a resolution bandwidth of 9 kHz. Peak detection is used unless otherwise noted as quasi-peak or average.

Line conducted data is recorded for both Neutral and Live lines.

Limit:

FCC §15.207 (a)

RSS-Gen 8.8

Frequency	QP Limit	AV Limit
MHz	**dBµV**	**dBµV**
0.150-0.500	66-56*	56-46*
0.500-5	56	46
5-30	60	50

Decreasing linear.

3.2 Duty cycle

Test Method:
The test method was refered to the subclause 11.6 of ANSI C63.10-2013.

Measurements of duty cycle and transmission duration shall be performed using one of the following techniques:

a) A diode detector and an oscilloscope that together have a sufficiently short response time to permit accurate measurements of the ON and OFF times of the transmitted signal.

b) The zero-span mode on a spectrum analyzer or EMI receiver if the response time and spacing between bins on the sweep are sufficient to permit accurate measurements of the ON and OFF times of the transmitted signal:

   1) Set the center frequency of the instrument to the center frequency of the transmission.

   2) Set RBW ≧ OBW if possible; otherwise, set RBW to the largest available value.

   3) Set VBW ≧ RBW. Set detector = peak or average.

   4) The zero-span measurement method shall not be used unless both RBW and VBW are > 50/*T* and the number of sweep points across duration *T* exceeds 100. (For example, if VBW and/or RBW are limited to 3 MHz, then the zero-span method of measuring the duty cycle shall not be used if *T* ≤16.7 μs.)

Limit:

None; for reporting purposes only.

3.3 6dB bandwidth

Test Method:
The test method was refered to the subclause 11.8 of ANSI C63.10-2013.

Option 1

The steps for the first option are as follows:

a) Set RBW = 100 kHz.

b) Set the VBW ≧ [3 × RBW].

c) Detector = peak.

d) Trace mode = max hold.

e) Sweep = auto couple.

f) Allow the trace to stabilize.

g) Measure the maximum width of the emission that is constrained by the frequencies associated with the two outermost amplitude points (upper and lower frequencies) that are attenuated by 6 dB relative to the maximum level measured in the fundamental emission.

Option 2

The automatic bandwidth measurement capability of an instrument may be employed using the X dB bandwidth mode with X set to 6 dB, if the functionality described in Option 1 (i.e., RBW = 100 kHz, VBW ≧ 3 × RBW, and peak detector with maximum hold) is implemented by the instrumentation function. When using this capability, care shall be taken so that the bandwidth measurement is not influenced by any intermediate power nulls in the fundamental emission that might be ≧6 dB.

Limit:

FCC §15.247 (a)

RSS-247 5.2 (a)

The minimum 6 dB bandwidth shall be at least 500 kHz.

3.4 99% Occupied Bandwidth

Test Method:
The test method was refered to the subclause 6.9.3 of ANSI C63.10-2013.

The occupied bandwidth is the frequency bandwidth such that, below its lower and above its upper frequency limits, the mean powers are each equal to 0.5% of the total mean power of the given emission. The following procedure shall be used for measuring 99% power bandwidth:

a) The instrument center frequency is set to the nominal EUT channel center frequency. The frequency span for the spectrum analyzer shall be between 1.5 times and 5.0 times the OBW.

b) The nominal IF filter bandwidth (3 dB RBW) shall be in the range of 1% to 5% of the OBW, and VBW shall be approximately three times the RBW, unless otherwise specified by the applicable requirement.

c) Set the reference level of the instrument as required, keeping the signal from exceeding the maximum input mixer level for linear operation. In general, the peak of the spectral envelope shall be more than [10 log (OBW/RBW)] below the reference level. Specific guidance is given in 4.1.5.2.

d) Step a) through step c) might require iteration to adjust within the specified range.

e) Video averaging is not permitted. Where practical, a sample detection and single sweep mode shall be used. Otherwise, peak detection and max hold mode (until the trace stabilizes) shall be used.

f) Use the 99% power bandwidth function of the instrument (if available) and report the measured bandwidth.

g) If the instrument does not have a 99% power bandwidth function, then the trace data points are recovered and directly summed in linear power terms. The recovered amplitude data points, beginning at the lowest frequency, are placed in a running sum until 0.5% of the total is reached; that frequency is recorded as the lower frequency. The process is repeated until 99.5% of the total is reached; that frequency is recorded as the upper frequency. The 99% power bandwidth is the difference between these two frequencies.

h) The occupied bandwidth shall be reported by providing plot(s) of the measuring instrument display; the plot axes and the scale units per division shall be clearly labeled. Tabular data may be reported in addition to the plot(s).

Limit:

None; for reporting purposes only.

3.6 Conducted Peak output power

Test Method
The test method was refered to the subclause 11.9.1.1 of ANSI C63.10-2013.

The following procedure shall be used when an instrument with a resolution bandwidth that is greater than the DTS bandwidth is available to perform the measurement:

a) Set the RBW ≧ DTS bandwidth.

b) Set VBW ≧ [3 × RBW].

c) Set span ≧ [3 × RBW].

d) Sweep time = auto couple.

e) Detector = peak.

f) Trace mode = max hold.

g) Allow trace to fully stabilize.

h) Use peak marker function to determine the peak amplitude level.

Limits:

FCC §15.247 (b) (3)
For systems using digital modulation in the 902-928 MHz, 2400-2483.5 MHz, and 5725-5850 MHz bands: 1 Watt.

RSS-247 Clause 5.4 (d)
For DTSs employing digital modulation techniques operating in the bands 902-928 MHz and 2400-2483.5 MHz, the maximum conducted output power shall not exceed 1 W. The e.i.r.p. shall not exceed 4 W, except as provided in section 5.4(e).

3.7 Power spectral density

Test Method:
The test method was refered to the subclause 11.10.2 of ANSI C63.10-2013.

The following procedure shall be used if maximum peak conducted output power was used to determine compliance, and it is optional if the maximum conducted (average) output power was used to determine compliance:

a) Set analyzer center frequency to DTS channel center frequency.

b) Set the span to 1.5 times the DTS bandwidth.

c) Set the RBW to 3 kHz ≦ RBW ≦ 100 kHz.

d) Set the VBW ≧ [3 × RBW].

e) Detector = peak.

f) Sweep time = auto couple.

g) Trace mode = max hold.

h) Allow trace to fully stabilize.

i) Use the peak marker function to determine the maximum amplitude level within the RBW.

j) If measured value exceeds requirement, then reduce RBW (but no less than 3 kHz) and repeat.

Limit:

FCC §15.247 (e)

RSS-247 (5.2) (b)

For digitally modulated systems, the power spectral density conducted from the intentional radiator to the antenna shall not be greater than 8 dBm in any 3 kHz band during any time interval of continuous transmission.

3.8 Conducted Spurious Emissions

Test Method:
The test method was refered to the subclause 11.11/11.12 of ANSI C63.10-2013.

Establish a reference level by using the following procedure:

a) Set instrument center frequency to DTS channel center frequency.

b) Set the span to ≧ 1.5 times the DTS bandwidth.

c) Set the RBW = 100 kHz.

d) Set the VBW ≧ [3 × RBW].

e) Detector = peak.

f) Sweep time = auto couple.

g) Trace mode = max hold.

h) Allow trace to fully stabilize.

i) Use the peak marker function to determine the maximum PSD level.

Note that the channel found to contain the maximum PSD level can be used to establish the reference level.

Establish an emission level by using the following procedure:

a) Set the center frequency and span to encompass frequency range to be measured.

b) Set the RBW = 100 kHz.

c) Set the VBW ≧ [3 × RBW].

d) Detector = peak.

e) Sweep time = auto couple.

f) Trace mode = max hold.

g) Allow trace to fully stabilize.

h) Use the peak marker function to determine the maximum amplitude level.

Ensure that the amplitude of all unwanted emissions outside of the authorized frequency band (excluding restricted frequency bands) is attenuated by at least the minimum requirements specified in 11.11. Report the three highest emissions relative to the limit.

Limit:

FCC §15.247 (d)

RSS-247 5.5

Output power was measured based on the use of a peak measurement, therefore the required attenation is 20 dB.

3.9 Band edge

Test Method:
The test method was refered to the subclause 11.13.3 of ANSI C63.10-2013.

Peak detection
When using a peak detector to measure unwanted emissions at or near the band edge (within 2 MHz of the authorized band), the following integration procedure can be used:

a) Set instrument center frequency to the frequency of the emission to be measured (must be within 2 MHz of the authorized band edge).

b) Set span to 2 MHz.

c) RBW = 100 kHz.

d) VBW ≧ [3 × RBW].

e) Detector = peak.

f) Sweep time = auto.

g) Trace mode = max hold.

h) Allow sweep to continue until the trace stabilizes (required measurement time may increase for low-duty-cycle applications).

i) Compute the power by integrating the spectrum over 1 MHz using the analyzer's band power measurement function with band limits set equal to the emission frequency ($f_{emission}$) ± 0.5 MHz. If the instrument does not have a band power function, then sum the amplitude levels (in power units) at 100 kHz intervals extending across the 1 MHz spectrum defined by $f_{emission}$ ± 0.5 MHz.

Trace averaging with continuous EUT transmission at full power
If the EUT can be configured or modified to transmit continuously (D ≧ 98%), then the average emission levels within 2 MHz of the authorized band edge may be measured using the following method (with EUT transmitting continuously):

a) Set instrument center frequency to the frequency of the emission to be measured (must be within 2 MHz of the authorized band edge).

b) Set span to 2 MHz.

c) RBW = 100 kHz.

d) VBW ≧ [3 × RBW].

e) Detector = RMS (power averaging), if [span / (# of points in sweep)] ≦ (RBW / 2).

f) Averaging type = power (i.e., rms):

   1) As an alternative, the detector and averaging type may be set for linear voltage averaging.

   2) Some instruments require linear display mode to use linear voltage averaging. Log or dB averaging shall not be used.

g) Sweep time = auto.

h) Perform a trace average of at least 100 traces.

i) Compute the power by integrating the spectrum over 1 MHz using the analyzer's band power measurement function with band limits set equal to the emission frequency ($f_{emission}$) ± 0.5 MHz. If the instrument does not have a band power function, then sum the amplitude levels (in power units) at 100 kHz intervals extending across the 1 MHz spectrum defined by $f_{emission}$ ± 0.5 MHz.

Trace averaging across ON and OFF times of the EUT transmissions followed by duty cycle correction

If continuous transmission of the EUT (D ≧ 98%) cannot be achieved and the duty cycle is constant (duty cycle variations are less ±2%), then the following procedure may be used to measure the average power of unwanted emssions within 2 MHz of the authorized band edge:

a) The EUT shall be configured to operate at the maximum achievable duty cycle.

b) Measure the duty cycle *D* of the transmitter output signal as described in 11.6.

c) Set instrument center frequency to the frequency of the emission to be measured.

d) Set span to 2 MHz.

e) RBW = 100 kHz.

f) VBW ≧ 3 × RBW.

g) Detector = RMS (power averaging), if [span / (# of points in sweep)] ≦ (RBW / 2). Satisfying this condition may require increasing the number of points in the sweep or reducing the span. If this condition cannot be satisfied, then the detector mode shall be set to peak.

h) Averaging type = power (i.e., rms):

   1) As an alternative, the detector and averaging type may be set for linear voltage averaging.

   2) Some instruments require linear display mode to use linear voltage averaging. Log or dB averaging shall not be used.

i) Sweep time = auto.

j) Perform a trace average of at least 100 traces.

k) Compute the power by integrating the spectrum over 1 MHz using the instrument's band power measurement function with band limits set equal to the emission frequency ($f_{emission}$) ± 0.5 MHz. If the spectrum analyzer does not have a band power function, then sum the amplitude levels (in power units) at 100 kHz intervals extending across the 1 MHz spectrum defined by $f_{emission}$ ± 0.5 MHz.

l) A correction factor shall be added to the measurement results prior to comparing with the emission limit to compute the emission level that would have been measured had the test been performed at 100% duty cycle. The correction factor is computed as follows:

   1) If power averaging (rms) mode was used in step f), then the applicable correction factor is [10 log (1 / *D*)], where *D* is the duty cycle.

   2) If linear voltage averaging mode was used in step f), then the applicable correction factor is [20 log (1 / *D*)], where *D* is the duty cycle.

   3) If a specific emission is demonstrated to be continuous (*D* ≧98%) rather than turning ON and OFF with the transmit cycle, then no duty cycle correction is required for that emission.

Reduction of the measured emission amplitude levels to account for operational duty cycle is not permitted. Determining compliance is based on emission levels occurring during transmission—it is not based on an average across ON and OFF times of the transmitter.

Reduced VBW averaging across ON and OFF times of the EUT transmissions with max hold
If continuous transmission of the EUT (D ≧ 98%) cannot be achieved and the duty cycle is not constant (duty cycle variations equal or exceed ±2%), then the following procedure may be used to measure unwanted emissions within 2 MHz of the authorized band edge:

a) Set analyzer center frequency to the frequency of the emission to be measured.

b) Set span to 2 MHz.

c) RBW = 100 kHz.

d) VBW ≧ 1 / *T*.

e) Video bandwidth mode or display mode:

1) The analyzer shall be set to ensure that video filtering is applied in the power domain. Typically, this requires setting the detector mode to RMS (power averaging) and setting the average-VBW type to power (rms).

2) As an alternative, the analyzer may be set to linear detector mode. Ensure that video filtering is applied in linear voltage domain (rather than in a log or dB domain). Some analyzers require linear display mode to accomplish this. Others have a setting for average-VBW type, which can be set to "voltage" regardless of the display mode. f) Detector = peak.

g) Sweep time = auto.

h) Trace mode = max hold.

i) Allow max hold to run for at least [50 × (1 / *D*)] traces.

j) Compute the power by integrating the spectrum over 1 MHz using the analyzer's band power measurement function with band limits set equal to the emission frequency ($f_{emission}$) ± 0.5 MHz. If the spectrum analyzer does not have a band power function, then sum the amplitude levels (in power units) at 100 kHz intervals extending across the 1 MHz spectrum defined by $f_{emission}$ ± 0.5 MHz.

Limit:

FCC §15.247 (d)

RSS-247 5.5

Output power was measured based on the use of a peak measurement, therefore the required at-tenation is 20 dB.

3.10 Spurious radiated emissions for transmitter

Test Method:

The test method was refered to the subclause 11.11/11.12 of ANSI C63.10-2013.

1: The EUT was place on a turn table which is 1.5m above ground plane for above 1GHz and 0.8m above ground for below 1GHz at 3 meter chamber room for test. The table was rotated 360 degrees to determine the position of the highest radiation.

2: The EUT was set 3 meters away from the interference – receiving antenna, which was mounted on the top of a variable – height antenna tower.

3: The height of antenna is varied from one meter to four meters above the ground to determine the maximum value of the field strength. Both horizontal and vertical polarizations of the antenna are set to make the measurement.

4: For each suspected emission, the EUT was arranged to its worst case and then the antenna was tuned to heights from 1 meter to 4 meters and the rotatable table was turned from 0 degrees to 360 degrees to find the maximum reading.

5: Use the following spectrum analyzer settings According to C63.10:

For Above 1GHz

Span = wide enough to capture the peak level of the in-band emission and all spurious
RBW = 1MHz, VBW≥RBW for peak measurement and VBW = 10Hz for average measurement, Sweep = auto, Detector function = peak, Trace = max hold.

For Below 1GHz

Use the following spectrum analyzer settings:

Span = wide enough to capture the peak level of the in-band emission and all spurious
RBW = 100 KHz, VBW≥RBW for peak measurement, Sweep = auto, Detector function = peak, Trace = max hold.

For Below 30MHz

Use the following spectrum analyzer settings:

Span = wide enough to capture the peak level of the in-band emission and all spurious
RBW = 200 Hz, VBW≥RBW from 9KHz to 0.15MHz, RBW 9KHz VBW≥RBW from 0.15MHz to 30MHz for peak measurement, Sweep = auto, Detector function = peak, Trace = max hold.

Note:

1: The resolution bandwidth and video bandwidth of test receiver/spectrum analyzer is 120 KHz for Quasi-peak detection (QP) at frequency below 1GHz.

2: The resolution bandwidth of test receiver/spectrum analyzer is 1MHz and the video bandwidth is 3MHz for peak detection (PK) at frequency above 1GHz.

3: The resolution bandwidth of test receiver/spectrum analyzer is 1MHz and the video bandwidth is 3MHz for RMS Average ((duty cycle < 98%) for Average detection (AV) at frequency above 1GHz, then the measurement results was added to a correction factor (20log(1/duty cycle)).

4: The resolution bandwidth of test receiver/spectrum analyzer is 1MHz and the video bandwidth is 10Hz (duty cycle > 98%) for Average detection (AV) at frequency above 1GHz.

5: When duty cycle <98%, The resolution bandwidth of test receiver/spectrum analyzer is 1MHz and the video bandwidth is VBW ≥ 1 / T, the T is transmission duration (T).

Limit:

FCC §15.205 and §15.209

RSS-GEN, Section 8.9 and 8.10.

Frequency Range (MHz)	Field Strength Limit (uV/m) at 3 m	Field Strength Limit (dBuV/m) at 3 m
0.009-0.490	2400/F(kHz) @ 300 m	-
0.490-1.705	24000/F(kHz) @ 30 m	-
1.705 - 30	30 @ 30m	-
30 - 88	100	40
88 - 216	150	43.5
216 - 960	200	46
Above 960	500	54

§15.205 Restricted bands of operation

MHz	MHz	MHz	GHz
0.090-0.110	16.42-16.423	399.9-410	4.5-5.15
0.495-0.505	16.69475-16.69525	608-614	5.35-5.46
2.1735-2.1905	16.80425-16.80475	960-1240	7.25-7.75
4.125-4.128	25.5-25.67	1300-1427	8.025-8.5
4.17725-4.17775	37.5-38.25	1435-1626.5	9.0-9.2
4.20725-4.20775	73-74.6	1645.5-1646.5	9.3-9.5
6.215-6.218	74.8-75.2	1660-1710	10.6-12.7
6.26775-6.26825	108-121.94	1718.8-1722.2	13.25-13.4
6.31175-6.31225	123-138	2200-2300	14.47-14.5
8.291-8.294	149.9-150.05	2310-2390	15.35-16.2
8.362-8.366	156.52475-156.52525	2483.5-2500	17.7-21.4
8.37625-8.38675	156.7-156.9	2690-2900	22.01-23.12
8.41425-8.41475	162.0125-167.17	3260-3267	23.6-24.0
12.29-12.293	167.72-173.2	3332-3339	31.2-31.8
12.51975-12.52025	240-285	3345.8-3358	36.43-36.5
12.57675-12.57725	322-335.4	3600-4400	
13.36-13.41			

RSS-GEN 8.10

MHz	MHz	MHz	GHz
0.090 - 0.110	16.42 - 16.423	1660 - 1710	9.0 - 9.2
0.495 - 0.505	16.69475 - 16.69525	1718.8 - 1722.2	9.3 - 9.5
2.1735 - 2.1905	25.5 - 25.67	2200 - 2300	10.6 - 12.7
3.020 - 3.026	37.5 - 38.25	2310 - 2390	13.25 - 13.4
4.125 - 4.128	73 - 74.6	2483.5 - 2500	14.47 - 14.5
4.17725 - 4.17775	74.8 - 75.2	2655 - 2900	15.35 - 16.2
4.20725 - 4.20775	108 – 138	3260 – 3267	17.7 - 21.4
5.677 - 5.683	149.9 - 150.05	3332 - 3339	22.01 - 23.12
6.215 - 6.218	156.52475 - 156.52525	3345.8 - 3358	23.6 - 24.0
6.26775 - 6.26825	156.7 - 156.9	3500 - 4400	31.2 - 31.8
6.31175 - 6.31225	162.0125 - 167.17	4500 - 5150	36.43 - 36.5
8.291 - 8.294	167.72 - 173.2	5350 - 5460	Above 38.6
8.362 - 8.366	240 – 285	7250 - 7750	
8.37625 - 8.38675	322 - 335.4	8025 – 8500	
8.41425 - 8.41475	399.9 - 410		
12.29 - 12.293	608 - 614		
12.51975 - 12.52025	960 - 1427		
12.57675 - 12.57725	1435 - 1626.5		
13.36 - 13.41	1645.5 - 1646.5		

4 Test Setup Photos

Ref “EFGX23060081-IE-01-E01_Setup_Photos.pdf”

5 External Photo

Ref “EFGX23060081-IE-01-E01_External_Photos.pdf”

6 Internal Photos

Ref “EFGX23060081-IE-01-E01_Internal_Photos.pdf”

7 Appendix

Ref “EFGX23060081-IE-01-E02_appendix.pdf”

-End of report-