TEST REPORT

Applicant Name :	Shanghai ABXY Tech Co., Ltd.
Address :	5F, Building 11, No.6055 Jinhai Highway, Fengxian District, Shanghai
Report Number :	RA230523-28733E-SA
FCC ID:	2BBMD-ABXYLUTE1

Test Standard (s)

FCC Part 2.1093

Sample Description

Product Type:	Handheld Game Console
Model No.:	abxylute_one
Multiple Models:	N/A
Trade Mark:	abxylute
Date Received:	2023/05/24
Date of Test:	2023/06/07
Report Date:	2023/06/19

Test Result:	Pass*

* In the configuration tested, the EUT complied with the standards above.

Prepared and Checked By:

Lance Li

EMC Engineer

Approved By:

Candy Li

EMC Engineer

Note: This report may contain data that are not covered by the A2LA accreditation and are marked with an asterisk "★".

Shenzhen Accurate Technology Co., Ltd. is not responsible for the authenticity of any test data provided by the applicant. Data included from the applicant that may affect test results are marked with an asterisk '*'. Customer model name, addresses, names, trademarks etc. are not considered data.

This report cannot be reproduced except in full, without prior written approval of the Company. Unless otherwise stated the results shown in this test report refer only to the sample(s) tested. This report is valid only with a valid digital signature. The digital signature may be available only under the Adobe software above version 7.0.

Attestation of Test Results			
MODE		**Max. SAR Level(s) Reported(W/kg)**	**Limit (W/kg)**
2.4G Wi-Fi	1g Body SAR	**0.74**	1.6
5.2G Wi-Fi	1g Body SAR	0.70	
5.8G Wi-Fi	1g Body SAR	0.44	
Simultaneous	1g Body SAR	**1.37**	
Applicable Standards	**FCC 47 CFR part 2.1093** Radiofrequency radiation exposure evaluation: portable devices		
	RF Exposure Procedures: TCB Workshop October 2016(Bluetooth Duty Factor)		
	IEEE1528:2013 IEEE Recommended Practice for Determining the Peak Spatial-Average Specific Absorption Rate (SAR) in the Human Head from Wireless Communications Devices: Measurement Techniques		
	KDB procedures KDB 447498 D01 General RF Exposure Guidance v06 KDB 865664 D01 SAR Measurement 100 MHz to 6 GHz v01r04 KDB 865664 D02 RF Exposure Reporting v01r02 KDB 248227 D01 802 11 Wi-Fi SAR v02r02		
Note: This wireless device has been shown to be capable of compliance for localized specific absorption rate (SAR) for General Population/Uncontrolled Exposure limits specified in **FCC 47 CFR part 2.1093** and has been tested in Accordance with the measurement procedures specified in IEEE 1528-2013 and RF exposure KDB procedures. **The results and statements contained in this report pertain only to the device(s) evaluated.**			

TABLE OF CONTENTS

DOCUMENT REVISION HISTORY **4**
EUT DESCRIPTION **5**
TECHNICAL SPECIFICATION 5
REFERENCE, STANDARDS, AND GUIDELINES **6**
SAR LIMITS 7
FACILITIES **8**
DESCRIPTION OF TEST SYSTEM **9**
EQUIPMENT LIST AND CALIBRATION **15**
EQUIPMENTS LIST & CALIBRATION INFORMATION 15
SAR MEASUREMENT SYSTEM VERIFICATION **16**
LIQUID VERIFICATION 16
SYSTEM ACCURACY VERIFICATION 17
SAR SYSTEM VALIDATION DATA 18
EUT TEST STRATEGY AND METHODOLOGY **21**
TEST POSITIONS FOR BODY-WORN AND OTHER CONFIGURATIONS 21
TEST DISTANCE FOR SAR EVALUATION 21
SAR EVALUATION PROCEDURE 22
CONDUCTED OUTPUT POWER MEASUREMENT **23**
TEST PROCEDURE 23
MAXIMUM TARGET OUTPUT POWER 23
STANDALONE SAR TEST EXCLUSION CONSIDERATIONS **32**
ANTENNA DISTANCE TO EDGE: 32
STANDALONE SAR TEST EXCLUSION CONSIDERATIONS 33
STANDALONE SAR ESTIMATION: 33
STANDALONE SAR TEST EXCLUSION DISTANCE CONSIDERATIONS: 33
SAR TEST EXCLUSION FOR THE EUT EDGE CONSIDERATIONS RESULT 34
SAR MEASUREMENT RESULTS **35**
SAR TEST DATA 35
SAR MEASUREMENT VARIABILITY **39**
SAR SIMULTANEOUS TRANSMISSION DESCRIPTION **40**
SAR PLOTS **41**
APPENDIX A MEASUREMENT UNCERTAINTY **42**
APPENDIX B EUT TEST POSITION PHOTOS **43**
APPENDIX C PROBE CALIBRATION CERTIFICATES **44**
APPENDIX D DIPOLE CALIBRATION CERTIFICATES **45**

DOCUMENT REVISION HISTORY

Revision Number	Report Number	Description of Revision	Date of Revision
0	RA230523-28733E-SA	Original Report	2023/06/19

EUT DESCRIPTION

This report has been prepared on behalf of ***Shanghai ABXY Tech Co., Ltd.*** and their product ***Handheld Game Console***, Model: ***abxylute_one***, SN: ***25E8-1***, FCC ID: ***2BBMD-ABXYLUTE1*** or the EUT (Equipment under Test) as referred to in the rest of this report.

Technical Specification

Device Type:	Portable
Exposure Category:	Population / Uncontrolled
Antenna Type(s):	Internal Antenna
Body-Worn Accessories:	Headset
Face-Head Accessories:	None
Modulation Technique:	Bluetooth: BDR(GFSK)/EDR(π/4-DQPSK)/EDR(8DPSK) BLE: GFSK Wi-Fi: DSSS, OFDM
Frequency Band:	Wi-Fi 2.4G: 2412 -2462 MHz(TX&RX) Wi-Fi 5.2G:5150-5250MHz(TX&RX) Wi-Fi 5.8G:5725-5850MHz(TX&RX) Bluetooth: 2402 -2480 MHz(TX&RX) BLE: 2402 -2480 MHz(TX&RX)
Power Source:	Rechargeable Battery
Normal Operation:	Body-worn

REFERENCE, STANDARDS, AND GUIDELINES

FCC:

The Report and Order requires routine SAR evaluation prior to equipment authorization of portable transmitter devices, including portable telephones. For consumer products, the applicable limit is 1.6 mW/g as recommended by the ANSI/IEEE standard C95.1-1992 [6] for an uncontrolled environment (Paragraph 65). According to the Supplement C of OET Bulletin 65 “Evaluating Compliance with FCC Guide-lines for Human Exposure to Radio frequency Electromagnetic Fields", released on Jun 29, 2001 by the FCC, the device should be evaluated at maximum output power (radiated from the antenna) under “worst-case” conditions for normal or intended use, incorporating normal antenna operating positions, device peak performance frequencies and positions for maximum RF energy coupling.

This report describes the methodology and results of experiments performed on wireless data terminal. The objective was to determine if there is RF radiation and if radiation is found, what is the extent of radiation with respect to safety limits. SAR (Specific Absorption Rate) is the measure of RF exposure determined by the amount of RF energy absorbed by human body (or its parts) – to determine how the RF energy couples to the body or head which is a primary health concern for body worn devices. The limit below which the exposure to RF is considered safe by regulatory bodies in North America is 1.6 mW/g average over 1 gram of tissue mass.

IC:

The Report and Order requires routine SAR evaluation prior to equipment authorization of portable transmitter devices, including portable telephones. For consumer products, the applicable limit is 1.6 mW/g as recommended by the ISS-102 for an uncontrolled environment. According to the Safety Code 6 Health Canada’s Radiofrequency Exposure Guidelines, the device should be evaluated at maximum output power (radiated from the antenna) under “worst-case” conditions for normal or intended use, incorporating normal antenna operating positions, device peak performance frequencies and positions for maximum RF energy coupling.

This report describes the methodology and results of experiments performed on wireless data terminal. The objective was to determine if there is RF radiation and if radiation is found, what is the extent of radiation with respect to safety limits. SAR (Specific Absorption Rate) is the measure of RF exposure determined by the amount of RF energy absorbed by human body (or its parts) – to determine how the RF energy couples to the body or head which is a primary health concern for body worn devices. The limit below which the exposure to RF is considered safe by regulatory bodies in North America is 1.6 mW/g average over 1 gram of tissue mass.

SAR Limits

FCC Limit(1g Tissue)

EXPOSURE LIMITS	SAR (W/kg)	
	(General Population / Uncontrolled Exposure Environment)	(Occupational / Controlled Exposure Environment)
Spatial Average (averaged over the whole body)	0.08	0.4
Spatial Peak (averaged over any 1 g of tissue)	**1.60**	8.0
Spatial Peak (hands/wrists/feet/ankles averaged over 10 g)	4.0	20.0

IC Limit(1g Tissue)

EXPOSURE LIMITS	SAR (W/kg)	
	(General Population / Uncontrolled Exposure Environment)	(Occupational / Controlled Exposure Environment)
Spatial Average (averaged over the whole body)	0.08	0.4
Spatial Peak (averaged over any 1 g of tissue)	**1.60**	8.0
Spatial Peak (hands/wrists/feet/ankles averaged over 10 g)	4.0	20.0

Population/Uncontrolled Environments are defined as locations where there is the exposure of individual who have no knowledge or control of their exposure.

Occupational/Controlled Environments are defined as locations where there is exposure that may be incurred by people who are aware of the potential for exposure (i.e. as a result of employment or occupation).

General Population/Uncontrolled environments Spatial Peak limit 1.6W/kg (FCC&IC) applied to the EUT.

FACILITIES

The test site used by Shenzhen Accurate Technology Co., Ltd. to collect test data is located on the Floor 1, KuMaKe Building, Dongzhou Community, Guangming Street, Guangming District, Shenzhen, Guangdong, China.

The test site has been approved by the FCC under the KDB 974614 D01 and is listed in the FCC Public Access Link (PAL) database, FCC Registration No.: 708358, the FCC Designation No.: CN1189.

Accredited by American Association for Laboratory Accreditation (A2LA) The Certificate Number is 4297.01.

Listed by Innovation, Science and Economic Development Canada (ISEDC), the Registration Number is 30241.

DESCRIPTION OF TEST SYSTEM

These measurements were performed with the automated near-field scanning system DASY5 from Schmid & Partner Engineering AG (SPEAG) which is the Fifth generation of the system shown in the figure hereinafter:

DASY5 System Description

The DASY5 system for performing compliance tests consists of the following items:

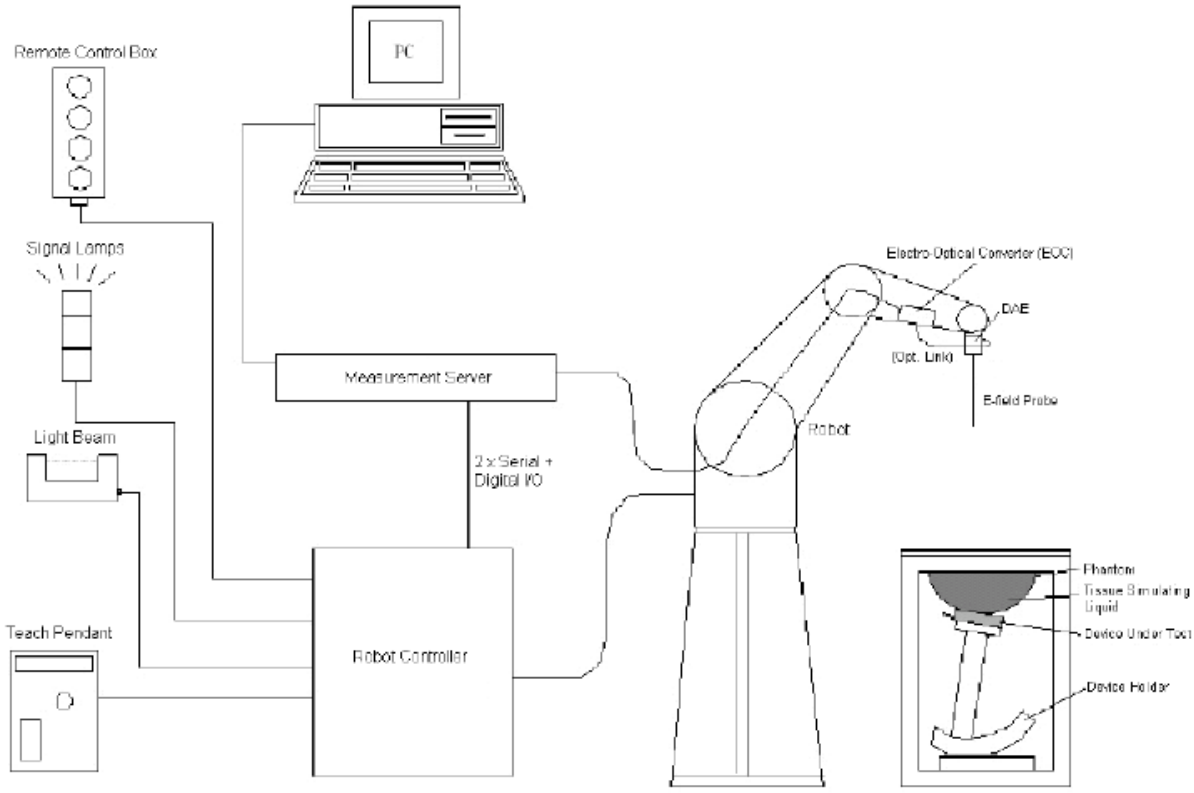

- A standard high precision 6-axis robot (Staubli TX=RX family) with controller, teach pendant and software. An arm extension for accommodating the data acquisition electronics (DAE).
- An isotropic field probe optimized and calibrated for the targeted measurement.
- A data acquisition electronics (DAE) which performs the signal application, signal multiplexing, AD-conversion, offset measurements, mechanical surface detection, collision detection, etc. The unit is battery powered with standard or rechargeable batteries. The signal is optically transmitted to the EOC.
- The Electro-optical converter (EOC) performs the conversion from optical to electrical signals for the digital communication to the DAE. To use optical surface detection, a special version of the EOC is required. The EOC signal is transmitted to the measurement server.
- The function of the measurement server is to perform the time critical tasks such as signal filtering, control of the robot operation and fast movement interrupts.
- The Light Beam used is for probe alignment. This improves the (absolute) accuracy of the probe positioning.
- A computer running Win7 professional operating system and the DASY52 software.
- Remote control and teach pendant as well as additional circuitry for robot safety such as warning lamps, etc.
- The phantom, the device holder and other accessories according to the targeted measurement.

DASY5 Measurement Server

The DASY5 measurement server is based on a PC/104 CPU board with a 400 MHz Intel ULV Celeron, 128 MB chip-disk and 128 MB RAM. The necessary circuits for communication with the DAE4 (or DAE3) electronics box, as well as the 16-bit AD converter system for optical detection and digital I/O interface are contained on the DASY6 I/O board, which is directly connected to the PC/104 bus of the CPU board.

The measurement server performs all real-time data evaluations of field measurements and surface detection, controls robot movements, and handles safety operations. The PC operating system cannot interfere with these time-critical processes. All connections are supervised by a watchdog, and disconnection of any of the cables to the measurement server will automatically disarm the robot and disable all program- controlled robot movements. Furthermore, the measurement server is equipped with an expansion port, which is reserved for future applications. Please note that this expansion port does not have a standardized pinout, and therefore only devices provided by SPEAG can be connected. Connection of devices from any other supplier could seriously damage the measurement server.

Data Acquisition Electronics

The data acquisition electronics (DAE4) consist of a highly sensitive electrometer-grade preamplifier with auto-zeroing, a channel and gain-switching multiplexer, a fast 16 bit AD-converter and a command decoder with a control logic unit. Transmission to the measurement server is accomplished through an optical downlink for data and status information, as well as an optical uplink for commands and the clock.

The mechanical probe mounting device includes two different sensor systems for frontal and sideways probe contacts. They are used for mechanical surface detection and probe collision detection.

The input impedance of both the DAE4 as well as of the DAE3 box is 200MOhm; the inputs are symmetrical and floating. Common mode rejection is above 80 dB.

EX3DV4 E-Field Probes

Frequency	10 MHz to > 6 GHz Linearity: ± 0.2 dB (30 MHz to 6 GHz)
Directivity	± 0.3 dB in TSL (rotation around probe axis) ± 0.5 dB in TSL (rotation normal to probe axis)
Dynamic Range	10 µW/g to > 100 mW/g Linearity: ± 0.2 dB (noise: typically < 1 µW/g)
Dimensions	Overall length: 337 mm (Tip: 20 mm) Tip diameter: 2.5 mm (Body: 12 mm) Typical distance from probe tip to dipole centers: 1 mm
Application	High precision dosimetric measurements in any exposure scenario (e.g., very strong gradient fields); the only probe that enables compliance testing for frequencies up to 6 GHz with precision of better 30%.
Compatibility	DASY3, DASY4, DASY52 SAR and higher, EASY4/MRI

SAM Twin Phantom

The SAM Twin Phantom (shown in front of DASY5) is a fiberglass shell phantom with shell thickness 2 mm, except in the ear region where the thickness is increased to 6 mm..

When the phantom is mounted inside allocated slot of the DASY5 platform, phantom reference points can be taught directly in the DASY5 V5.2 software. When the DASY5 platform is used to mount the

Phantom, some of the phantom teaching points cannot be reached by the robot in DASY5 V5.2. A special tool called P1a-P2aX-Former is provided to transform two of the three points, P1 and P2, to reachable locations. To use these new teaching points, a revised phantom configuration file is required.
In addition to our standard broadband liquids, the phantom can be used with the following tissue simulating liquids:

Sugar-water-based liquids can be left permanently in the phantom. Always cover the liquid when the system is not in use to prevent changes in liquid parameters due to water evaporation.
DGBE-based liquids should be used with care. As DGBE is a softener for most plastics, the liquid should be taken out of the phantom, and the phantom should be dried when the system is not in use (desirable at least once a week).

Do not use other organic solvents without previously testing the solvent resistivity of the phantom.
Approximately 25 liters of liquid is required to fill the SAM Twin phantom.

Calibration Frequency Points for EX3DV4 E-Field Probes SN: 3701 Calibrated: 2023/03/15

Calibration Frequency Point(MHz)	Frequency Range(MHz)		Conversion Factor		
	From	To	X	Y	Z
750 Head	650	850	9.71	9.71	9.71
900 Head	850	1000	9.25	9.25	9.25
1750 Head	1650	1850	7.97	7.97	7.97
1900 Head	1850	2000	7.65	7.65	7.65
2300 Head	2200	2400	7.50	7.50	7.50
2450 Head	2400	2550	7.25	7.25	7.25
2600 Head	2550	2700	7.03	7.03	7.03
5250 Head	5140	5360	5.30	5.30	5.30
5600 Head	5390	5700	4.80	4.80	4.80
5750 Head	5640	5860	4.82	4.82	4.82

Area Scans

	≤ 3 GHz	> 3 GHz
Maximum distance from closest measurement point (geometric center of probe sensors) to phantom surface	5 mm ± 1 mm	½·δ·ln(2) mm ± 0.5 mm
Maximum probe angle from probe axis to phantom surface normal at the measurement location	30° ± 1°	20° ± 1°
Maximum area scan spatial resolution: Δx_{Area}, Δy_{Area}	≤ 2 GHz: ≤ 15 mm 2 – 3 GHz: ≤ 12 mm	3 – 4 GHz: ≤ 12 mm 4 – 6 GHz: ≤ 10 mm
	When the x or y dimension of the test device, in the measurement plane orientation, is smaller than the above, the measurement resolution must be ≤ the corresponding x or y dimension of the test device with at least one measurement point on the test device.	

Zoom Scan (Cube Scan Averaging)

Maximum zoom scan spatial resolution, normal to phantom surface	uniform grid: $\Delta z_{Zoom}(n)$		≤ 5 mm	3 – 4 GHz: ≤ 4 mm 4 – 5 GHz: ≤ 3 mm 5 – 6 GHz: ≤ 2 mm
	graded grid	$\Delta z_{Zoom}(1)$: between 1st two points closest to phantom surface	≤ 4 mm	3 – 4 GHz: ≤ 3 mm 4 – 5 GHz: ≤ 2.5 mm 5 – 6 GHz: ≤ 2 mm
		$\Delta z_{Zoom}(n>1)$: between subsequent points	≤ 1.5·$\Delta z_{Zoom}(n-1)$ mm	
Minimum zoom scan volume	x, y, z		≥ 30 mm	3 – 4 GHz: ≥ 28 mm 4 – 5 GHz: ≥ 25 mm 5 – 6 GHz: ≥ 22 mm

Note: δ is the penetration depth of a plane-wave at normal incidence to the tissue medium; see IEEE Std 1528-2013 for details.

* When zoom scan is required and the *reported* SAR from the *area scan based 1-g SAR estimation* procedures of KDB Publication 447498 is ≤ 1.4 W/kg, ≤ 8 mm, ≤ 7 mm and ≤ 5 mm zoom scan resolution may be applied, respectively, for 2 GHz to 3 GHz, 3 GHz to 4 GHz and 4 GHz to 6 GHz.

Tissue Dielectric Parameters for Head

The head tissue dielectric parameters recommended by the IEC 62209-1:2016

Recommended Tissue Dielectric Parameters for Head

Table A.3 – Dielectric properties of the head tissue-equivalent liquid

Frequency MHz	Relative permittivity ε_r	Conductivity (σ) S/m
300	45,3	0,87
450	43,5	0,87
750	*41,9*	*0,89*
835	41,5	0,90
900	41,5	0,97
1 450	40,5	1,20
1 500	*40,4*	*1,23*
1 640	*40,2*	*1,31*
1 750	*40,1*	*1,37*
1 800	40,0	1,40
1 900	40,0	1,40
2 000	40,0	1,40
2 100	*39,8*	*1,49*
2 300	*39,5*	*1,67*
2 450	39,2	1,80
2 600	*39,0*	*1,96*
3 000	38,5	2,40
3 500	*37,9*	*2,91*
4 000	*37,4*	*3,43*
4 500	*36,8*	*3,94*
5 000	*36,2*	*4,45*
5 200	*36,0*	*4,66*
5 400	*35,8*	*4,86*
5 600	*35,5*	*5,07*
5 800	*35,3*	*5,27*
6 000	*35,1*	*5,48*

NOTE For convenience, permittivity and conductivity values at those frequencies which are not part of the original data provided by Drossos et al. [33] or the extension to 5 800 MHz are provided (i.e. the values shown *in italics*). These values were linearly interpolated between the values in this table that are immediately above and below these values, except the values at 6 000 MHz that were linearly extrapolated from the values at 3 000 MHz and 5 800 MHz.

EQUIPMENT LIST AND CALIBRATION

Equipments List & Calibration Information

Equipment	Model	S/N	Calibration Date	Calibration Due Date
DASY5 Test Software	DASY52 52.10.4	N/A	NCR	NCR
DASY5 Measurement Server	DASY5 6.0.31	N/A	NCR	NCR
Data Acquisition Electronics	DAE4	1325	2022/08/29	2023/08/28
E-Field Probe	EX3DV4	3701	2023/03/15	2024/03/14
Mounting Device	MD4HHTV5	SD 000 H01 KA	NCR	NCR
SAM Twin Phantom	SAM-Twin V5.0	1744	NCR	NCR
Dipole,2450MHz	D2450V2	751	2020/10/13	2023/10/12
Dipole,5GHz	D5GHZV2	1301	2023/02/16	2026/02/15
Simulated Tissue Liquid Head	HBBL600-10000V6	SL AAH U16 BC	Each Time	
Network Analyzer	E5071B	MY42403851	2022/12/13	2023/12/12
Dielectric Assessment Kit	DAK-3.5	1320	NCR	NCR
Signal Generator	SMB100A	108362	2022/12/13	2023/12/12
USB wideband power sensor	U2021XA	MY52350001	2022/12/13	2023/12/12
Power Amplifier	CBA 1G-070	T44328	2022/12/13	2023/12/12
Linear Power Amplifier	AS0860-40/45	1060913	2022/12/13	2023/12/12
Directional Coupler	4223-20	3.113.277	2022/12/13	2023/12/12
6dB Attenuator	8493B 6dB Attenuator	2708A 04769	2022/12/13	2023/12/12
Spectrum Analyzer	FSV40	101949	2022/11/25	2023/11/24

SAR MEASUREMENT SYSTEM VERIFICATION

Liquid Verification

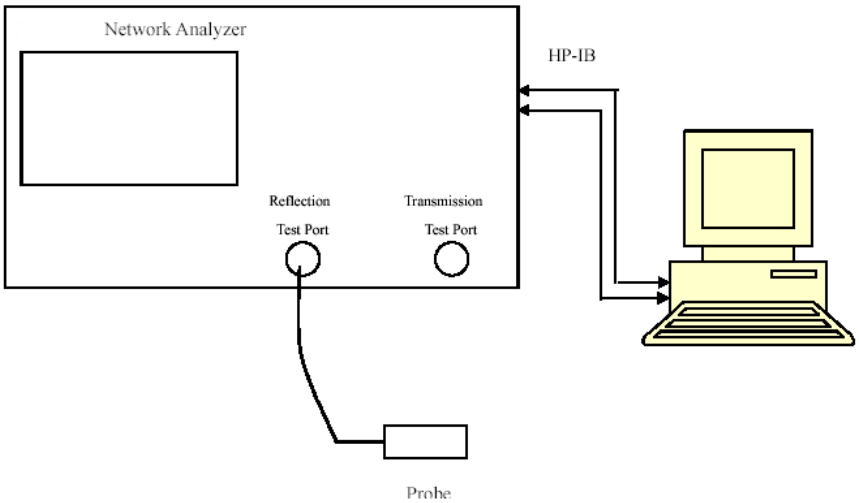

Liquid Verification Setup Block Diagram

Liquid Verification Results

Frequency (MHz)	Liquid Type	Liquid Parameter		Target Value		Delta (%)		Tolerance (%)
		ε_r	σ (S/m)	ε_r	σ (S/m)	$\Delta\varepsilon_r$	Δσ	
2412	Simulated Tissue Liquid Head	39.432	1.806	39.26	1.78	0.44	1.46	±5
2437	Simulated Tissue Liquid Head	39.281	1.822	39.22	1.79	0.16	1.79	±5
2450	Simulated Tissue Liquid Head	39.267	1.833	39.20	1.80	0.17	1.83	±5
2462	Simulated Tissue Liquid Head	39.343	1.831	39.18	1.81	0.42	1.16	±5

**Liquid Verification above was performed on 2023/06/07.*

Frequency (MHz)	Liquid Type	Liquid Parameter		Target Value		Delta (%)		Tolerance (%)
		ε_r	σ (S/m)	ε_r	σ (S/m)	$\Delta\varepsilon_r$	Δσ	
5180	Simulated Tissue Liquid Head	34.279	4.813	36.02	4.65	-4.83	3.51	±5
5200	Simulated Tissue Liquid Head	34.223	4.815	36.00	4.66	-4.94	3.33	±5
5240	Simulated Tissue Liquid Head	34.481	4.858	35.96	4.70	-4.11	3.36	±5
5250	Simulated Tissue Liquid Head	34.221	4.866	35.95	4.71	-4.81	3.31	±5
5745	Simulated Tissue Liquid Head	33.763	5.444	35.36	5.21	-4.52	4.49	±5
5750	Simulated Tissue Liquid Head	33.923	5.465	35.36	5.22	-4.06	4.69	±5
5785	Simulated Tissue Liquid Head	33.625	5.422	35.32	5.26	-4.8	3.08	±5
5825	Simulated Tissue Liquid Head	34.022	5.455	35.28	5.29	-3.57	3.12	±5

**Liquid Verification above was performed on 2023/06/07.*

System Accuracy Verification

Prior to the assessment, the system validation kit was used to test whether the system was operating within its specifications of ±10%. The validation results are tabulated below. And also the corresponding SAR plot is attached as well in the SAR plots files.

The spacing distances in the **System Verification Setup Block Diagram** is given by the following:

a) s = 15 mm ± 0,2 mm for 300 MHz ≤ f ≤ 1 000 MHz;

b) s = 10 mm ± 0,2 mm for 1 000 MHz < f ≤ 6 000 MHz;

System Verification Setup Block Diagram

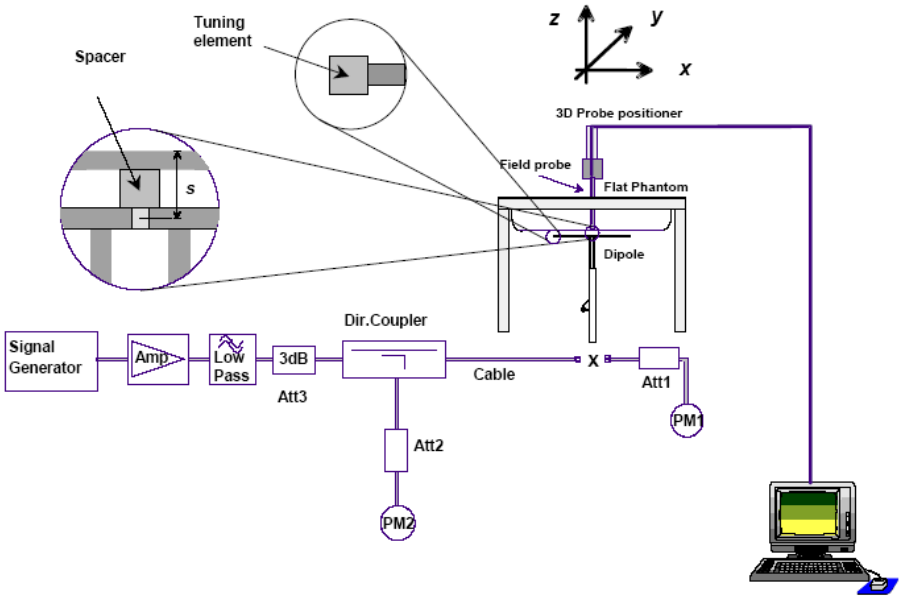

System Accuracy Check Results

Date	Frequency Band	Liquid Type	Input Power (mW)	Measured SAR (W/kg)		Normalized to 1W (W/kg)	Target Value (W/kg)	Delta (%)	Tolerance (%)
2023/06/07	2450 MHz	Head	100	1g	5.47	54.7	53.0	3.208	±10
2023/06/07	5250 MHz	Head	100	1g	7.81	78.1	77.7	0.515	±10
2023/06/07	5750 MHz	Head	100	1g	7.68	76.8	78.0	-1.538	±10

*The SAR values above are normalized to 1 Watt forward power.

SAR SYSTEM VALIDATION DATA

System Performance 2450MHz

DUT: D2450V2; Type: 2450 MHz; Serial: 751

Communication System: UID 0, CW (0); Frequency: 2450 MHz;Duty Cycle: 1:1
Medium parameters used: f = 2450 MHz; σ = 1.833 S/m; ε_r = 39.267; ρ = 1000 kg/m^3
Phantom section: Flat Section

DASY5 Configuration:

- Probe: EX3DV4- SN3701; ConvF(7.25, 7.25, 7.25) @2450 MHz; Calibrated: 2023/03/15
- Sensor-Surface: 1.4mm (Mechanical Surface Detection)
- Electronics: DAE4 Sn1325; Calibrated: 2022/08/29
- Phantom: Twin SAM; Type: QD000P40CD; Serial: 1744
- Measurement SW: DASY52, Version 52.10 (4); SEMCAD X Version 14.6.14 (7501)

System Performance Cheek at 2450MHz/d=10mm, Pin=100mw/Area Scan (10x11x1): Measurement grid: dx=10mm, dy=10mm
Maximum value of SAR (measured) = 6.69 W/kg

System Performance Cheek at 2450MHz/d=10mm, Pin=100mw/Zoom Scan (7x7x7)/Cube 0: Measurement grid: dx=5mm, dy=5mm, dz=5mm
Reference Value = 59.59 V/m; Power Drift = -0.08 dB
Peak SAR (extrapolated) = 10.8 W/kg
SAR(1 g) = 5.47 W/kg; SAR(10 g) = 2.55 W/kg
Maximum value of SAR (measured) = 6.71 W/kg

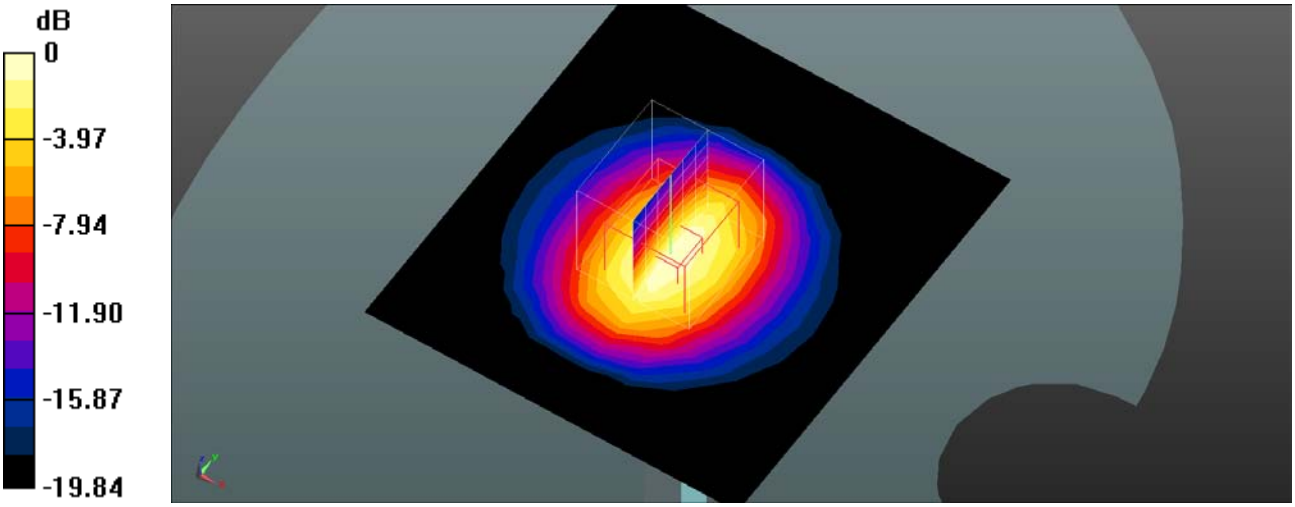

0 dB = 6.71 W/kg = 8.27 dBW/kg

System Performance 5250 MHz

DUT: Dipole 5GHz Type: D5GHZV2; Serial: 1301

Communication System: UID 0, CW (0); Frequency: 5250 MHz;Duty Cycle: 1:1
Medium parameters used: f = 5250 MHz; σ = 4.866 S/m; ε_r = 34.221; ρ = 1000 kg/m^3
Phantom section: Flat Section

DASY5 Configuration:

- Probe: EX3DV4- SN3701; ConvF(5.3, 5.3, 5.3) @5250 MHz; Calibrated: 2023/03/15
- Sensor-Surface: 1.4mm (Mechanical Surface Detection)
- Electronics: DAE4 Sn1325; Calibrated: 2022/08/29
- Phantom: Twin SAM; Type: QD000P40CD; Serial: 1744
- Measurement SW: DASY52, Version 52.10 (4); SEMCAD X Version 14.6.14 (7501)

System Performance Cheek at 5250MHz/d=10mm, Pin=100mw/Area Scan (6x8x1): Measurement grid: dx=10mm, dy=10mm
Maximum value of SAR (measured) = 19.6 W/kg

System Performance Cheek at 5250MHz/d=10mm, Pin=100mw/Zoom Scan (8x8x12)/Cube 0: Measurement grid: dx=4mm, dy=4mm, dz=2mm
Reference Value = 62.42 V/m; Power Drift = 0.09 dB
Peak SAR (extrapolated) = 38.7 W/kg
SAR(1 g) = 7.81 W/kg; SAR(10 g) = 2.32 W/kg
Maximum value of SAR (measured) = 19.1 W/kg

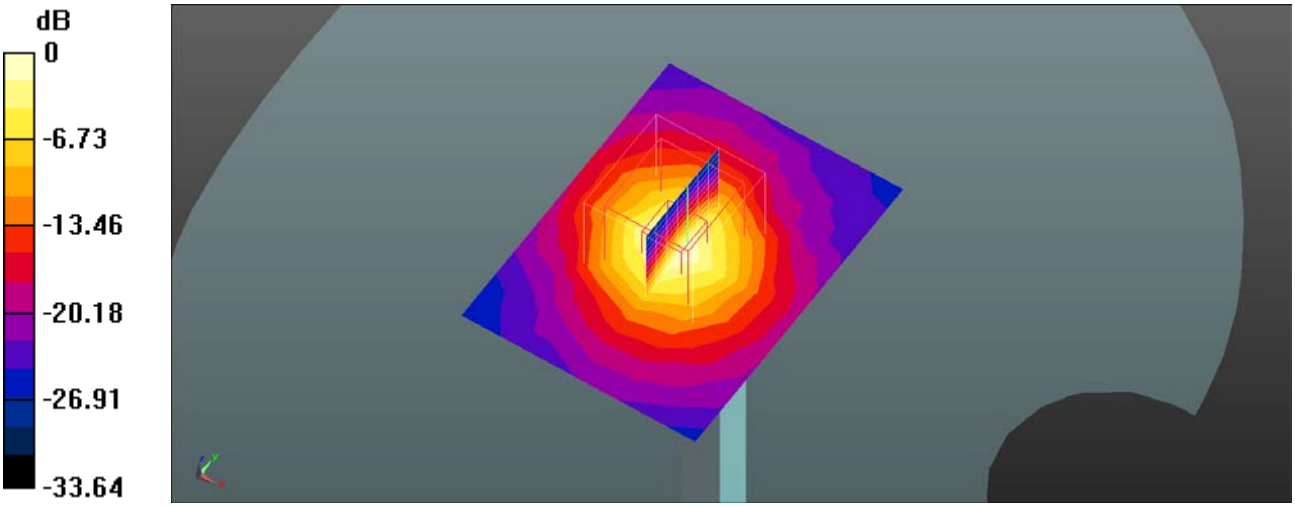

0 dB = 19.1 W/kg = 12.81 dBW/kg

System Performance 5750 MHz

DUT: Dipole 5GHz Type: D5GHZV2; Serial: 1301

Communication System: UID 0, CW (0); Frequency: 5750 MHz;Duty Cycle: 1:1
Medium parameters used: f = 5750 MHz; σ = 5.465 S/m; ε_r = 33.923; ρ = 1000 kg/m^3
Phantom section: Flat Section

DASY5 Configuration:

- Probe: EX3DV4- SN3701; ConvF(4.82, 4.82, 4.82) @5750 MHz; Calibrated: 2023/03/15
- Sensor-Surface: 1.4mm (Mechanical Surface Detection)
- Electronics: DAE4 Sn1325; Calibrated: 2022/08/29
- Phantom: Twin SAM; Type: QD000P40CD; Serial: 1744
- Measurement SW: DASY52, Version 52.10 (4); SEMCAD X Version 14.6.14 (7501)

System Performance Cheek at 5750MHz/d=10mm, Pin=100mw/Area Scan (6x8x1): Measurement grid: dx=10mm, dy=10mm
Maximum value of SAR (measured) = 18.7 W/kg

System Performance Cheek at 5750MHz/d=10mm, Pin=100mw/Zoom Scan (8x8x12)/Cube 0: Measurement grid: dx=4mm, dy=4mm, dz=2mm
Reference Value = 59.18 V/m; Power Drift = -0.11 dB
Peak SAR (extrapolated) = 35.2 W/kg
SAR(1 g) = 7.68 W/kg; SAR(10 g) = 2.22 W/kg
Maximum value of SAR (measured) = 18.5 W/kg

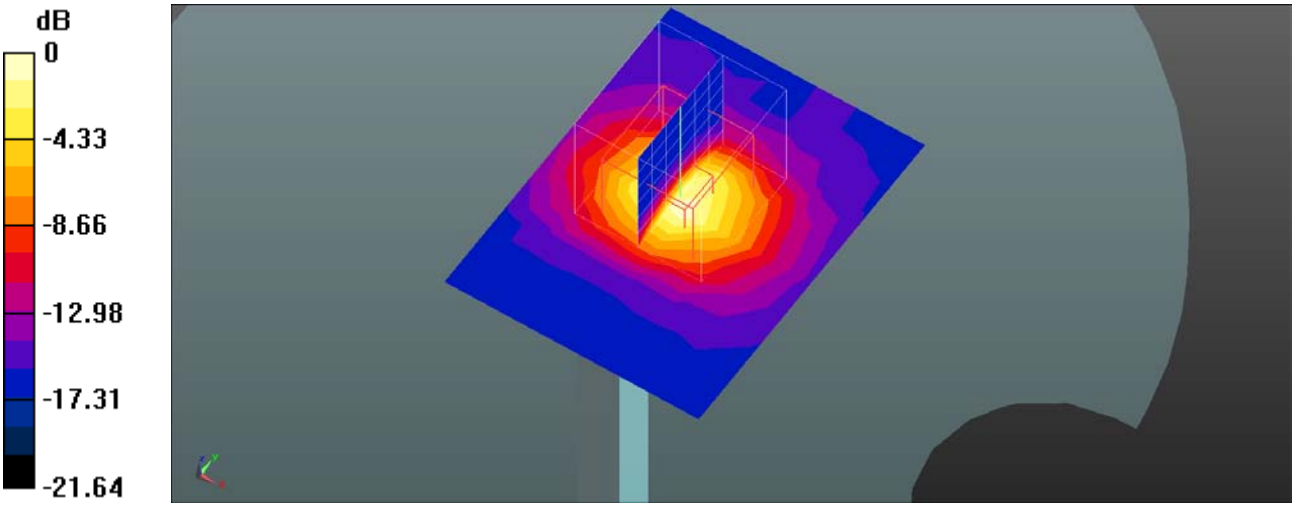

0 dB = 18.5 W/kg = 12.67 dBW/kg

EUT TEST STRATEGY AND METHODOLOGY

Test positions for body-worn and other configurations

Body-worn operating configurations should be tested with the belt-clips and holsters attached to the device and positioned against a flat phantom in normal use configurations. Devices with a headset output should be tested with a headset connected to the device. When multiple accessories that do not contain metallic components are supplied with the device, the device may be tested with only the accessory that dictates the closest spacing to the body. When multiple accessories that contain metallic components are supplied with the device, the device must be tested with each accessory that contains a unique metallic component. If multiple accessories share an identical metallic component (e.g., the same metallic belt-clip used with different holsters with no other metallic components), only the accessory that dictates the closest spacing to the body must be tested.

Body-worn accessories may not always be supplied or available as options for some devices that are intended to be authorized for body-worn use. A separation distance of 1.5 cm between the back of the device and a flat phantom is recommended for testing body-worn SAR compliance under such circumstances. Other separation distances may be used, but they should not exceed 2.5 cm. In these cases, the device may use body-worn accessories that provide a separation distance greater than that tested for the device provided however that the accessory contains no metallic components.

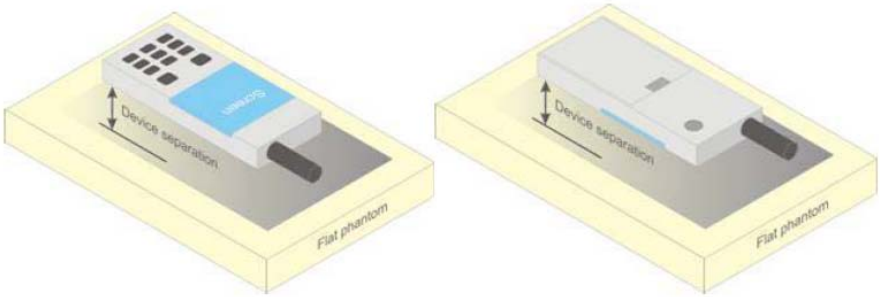

Figure 5 – Test positions for body-worn devices

Test Distance for SAR Evaluation

For this case the EUT(Equipment Under Test) is set 0mm away from the phantom, the test distance is 0mm.

SAR Evaluation Procedure

The evaluation was performed with the following procedure:

Step 1: Measurement of the SAR value at a fixed location above the ear point or central position was used as a reference value for assessing the power drop. The SAR at this point is measured at the start of the test and then again at the end of the testing.

Step 2: The SAR distribution at the exposed side of the head was measured at a distance of 4 mm from the inner surface of the shell. The area covered the entire dimension of the head or radiating structures of the EUT, the horizontal grid spacing was 15 mm x 15 mm, and the SAR distribution was determined by integrated grid of 1.5mm x 1.5mm. Based on these data, the area of the maximum absorption was determined by spline interpolation. The first Area Scan covers the entire dimension of the EUT to ensure that the hotspot was correctly identified.

Step 3: Around this point, a volume of 30 mm x 30 mm x 30 mm was assessed by measuring 7x 7 x 7 points. On the basis of this data set, the spatial peak SAR value was evaluated under the following procedure:

1) The data at the surface were extrapolated, since the center of the dipoles is 1.2 mm away from the tip of the probe and the distance between the surface and the lowest measuring point is 1.3 mm. The extrapolation was based on a least square algorithm. A polynomial of the fourth order was calculated through the points in z-axes. This polynomial was then used to evaluate the points between the surface and the probe tip.

2) The maximum interpolated value was searched with a straightforward algorithm. Around this maximum the SAR values averaged over the spatial volumes (1 g or 10 g) were computed by the 3D-Spline interpolation algorithm. The 3D-Spline is composed of three one dimensional splines with the “Not a knot"-condition (in x, y and z-directions). The volume was integrated with the trapezoidal-algorithm. One thousand points (10 x 10 x 10) were interpolated to calculate the averages.

All neighboring volumes were evaluated until no neighboring volume with a higher average value was found.

Step 4: Re-measurement of the SAR value at the same location as in Step 1. If the value changed by more than 5%, the evaluation was repeated.

CONDUCTED OUTPUT POWER MEASUREMENT

Test Procedure

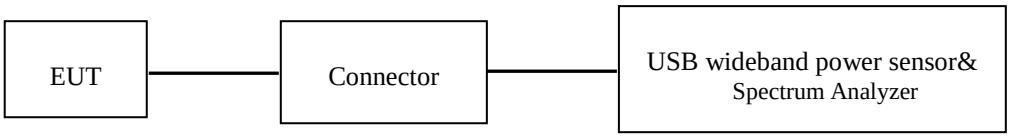

WLAN/ Bluetooth

Maximum Target Output Power

Max Target Power(dBm)			
Mode/Band	**Channel**		
	Low	**Middle**	**High**
WLAN 2.4G ANT1	15.0	15.0	15.0
WLAN 2.4G ANT2	15.0	15.0	15.0
WLAN 2.4G MIMO	18.0	18.0	18.0
WLAN 5.2G ANT1	14.0	14.0	14.0
WLAN 5.2G ANT2	13.0	13.0	13.0
WLAN 5.2G MIMO	16.5	16.5	16.5
WLAN 5.8G ANT1	15.5	15.5	15.5
WLAN 5.8G ANT2	15.5	15.5	15.5
WLAN 5.8G MIMO	18.5	18.5	18.5
Bluetooth	8.0	8.0	8.0
BLE	5.0	5.0	5.0

Test Results:

Bluetooth:

Mode	Channel frequency (MHz)	RF Output Power (dBm)
BDR(GFSK)	2402	5.83
	2441	5.55
	2480	5.21
EDR(π/4-DQPSK)	2402	7.69
	2441	7.47
	2480	7.07
EDR(8DPSK)	2402	7.71
	2441	7.50
	2480	7.05
BLE(1M)	2402	4.10
	2440	4.11
	2480	4.60
BLE(2M)	2402	4.11
	2440	4.18
	2480	4.58

Wi-Fi 2.4G:

Test Mode	Channel	Antenna	Average Power[dBm]
11b	2412	Ant1	14.17
		Ant2	14.37
		total	17.32
	2437	Ant1	14.54
		Ant2	14.76
		total	17.66
	2462	Ant1	14.16
		Ant2	14.55
		total	17.33
11g	2412	Ant1	14.05
		Ant2	14.11
		total	17.25
	2437	Ant1	13.85
		Ant2	14.17
		total	17.12
	2462	Ant1	13.84
		Ant2	14.21
		total	17.13
11n20	2412	Ant1	12.97
		Ant2	13.10
		total	16.24
	2437	Ant1	12.81
		Ant2	12.93
		total	16.18
	2462	Ant1	12.81
		Ant2	13.02
		total	16.04
11n40	2422	Ant1	12.79
		Ant2	12.85
		total	16.31
	2437	Ant1	12.74
		Ant2	12.97
		total	16.25
	2452	Ant1	12.81
		Ant2	12.97
		total	16.20

Wi-Fi 5.2G:

Test Mode	Channel	Antenna	Result[dBm]
11a	5180	Ant1	13.93
		Ant2	12.86
		Total	16.38
	5200	Ant1	13.42
		Ant2	12.48
		Total	15.95
	5240	Ant1	13.82
		Ant2	12.55
		Total	16.12
11n20	5180	Ant1	13.26
		Ant2	12.35
		Total	15.75
	5200	Ant1	12.79
		Ant2	12.12
		Total	15.43
	5240	Ant1	13.07
		Ant2	12.03
		Total	15.54
11n40	5190	Ant1	13.23
		Ant2	12.29
		Total	15.78
	5230	Ant1	13.38
		Ant2	12.28
		Total	15.92
11ac20	5180	Ant1	13.23
		Ant2	12.28
		Total	15.88
	5200	Ant1	12.73
		Ant2	12.01
		Total	15.51
	5240	Ant1	13.19
		Ant2	12.13

		Total	15.63
11ac40	5190	Ant1	13.24
		Ant2	12.10
		Total	15.86
	5230	Ant1	13.42
		Ant2	12.36
		Total	15.86
11ac80	5210	Ant1	13.21
		Ant2	12.40
		Total	15.89

Wi-Fi 5.8G:

Test Mode	Channel	Antenna	Result[dBm]
11a	5745	Ant1	15.19
		Ant2	15.03
		Total	18.04
	5785	Ant1	15.12
		Ant2	15.13
		Total	18.14
	5825	Ant1	15.07
		Ant2	14.77
		Total	17.83
11n20	5745	Ant1	14.43
		Ant2	14.82
		Total	17.58
	5785	Ant1	14.43
		Ant2	14.67
		Total	17.50
	5825	Ant1	14.27
		Ant2	14.36
		Total	17.28
11n40	5755	Ant1	14.83
		Ant2	14.70
		Total	17.81

	5795	Ant1	14.69
		Ant2	14.67
		Total	17.70
11ac20	5745	Ant1	14.44
		Ant2	14.73
		Total	17.58
	5785	Ant1	14.45
		Ant2	14.74
		Total	17.55
	5825	Ant1	14.35
		Ant2	14.34
		Total	17.32
11ac40	5755	Ant1	14.69
		Ant2	14.80
		Total	17.76
	5795	Ant1	14.81
		Ant2	14.74
		Total	17.72
11ac80	5775	Ant1	14.56
		Ant2	14.57
		Total	17.66

Duty Cycle:

2.4G WLAN:

Test Mode	Channel	Antenna	Duty Cycle [%]
11b	2412	Ant1	99.41
		Ant2	99.41
	2437	Ant1	99.41
		Ant2	99.41
	2462	Ant1	99.52
		Ant2	99.41
11g	2412	Ant1	95.86
		Ant2	96.53
	2437	Ant1	95.86
		Ant2	96.55
	2462	Ant1	95.86
		Ant2	96.53
11n20	2412	Ant1	95.56
		Ant2	96.30
	2437	Ant1	95.56
		Ant2	96.30
	2462	Ant1	95.56
		Ant2	96.30
11n40	2422	Ant1	91.55
		Ant2	92.86
	2437	Ant1	91.43
		Ant2	92.86
	2452	Ant1	92.86
		Ant2	91.43

BLE:

Test Mode	Antenna	Channel	Duty Cycle [%]
BLE_1M	Ant 0	2402	61.29
		2440	61.29
		2480	61.29
BLE_2M	Ant 0	2402	9.52
		2440	9.52
		2480	9.52

5.2G WLAN:

Test Mode	Channel	Antenna	Duty Cycle [%]
11a	5180	Ant1	95.86
		Ant2	96.53
	5200	Ant1	95.86
		Ant2	96.55
	5240	Ant1	95.86
		Ant2	96.53
11n20	5180	Ant1	96.30
		Ant2	95.59
	5200	Ant1	95.59
		Ant2	95.59
	5240	Ant1	96.30
		Ant2	95.59
11n40	5190	Ant1	92.86
		Ant2	92.86
	5230	Ant1	92.86
		Ant2	92.86
11ac20	5180	Ant1	96.35
		Ant2	96.35
	5200	Ant1	96.32
		Ant2	96.32
	5240	Ant1	96.35
		Ant2	96.32
11ac40	5190	Ant1	91.55
		Ant2	92.86
	5230	Ant1	92.86
		Ant2	91.55
11ac80	5210	Ant1	86.84
		Ant2	84.21

5.8G WLAN:

Test Mode	Channel	Antenna	Duty Cycle [%]
11a	5745	Ant1	95.86
		Ant2	96.53
	5785	Ant1	96.53
		Ant2	95.86
	5825	Ant1	96.53
		Ant2	96.53
11n20	5745	Ant1	96.30
		Ant2	95.59
	5785	Ant1	96.30
		Ant2	96.30
	5825	Ant1	96.30
		Ant2	95.59
11n40	5755	Ant1	92.86
		Ant2	92.86
	5795	Ant1	92.86
		Ant2	92.86
11ac20	5745	Ant1	95.62
		Ant2	96.32
	5785	Ant1	96.32
		Ant2	95.62
	5825	Ant1	95.62
		Ant2	96.32
11ac40	5755	Ant1	92.86
		Ant2	92.86
	5795	Ant1	91.55
		Ant2	91.55
11ac80	5775	Ant1	86.84
		Ant2	86.49

Standalone SAR test exclusion considerations

Antennas Location:

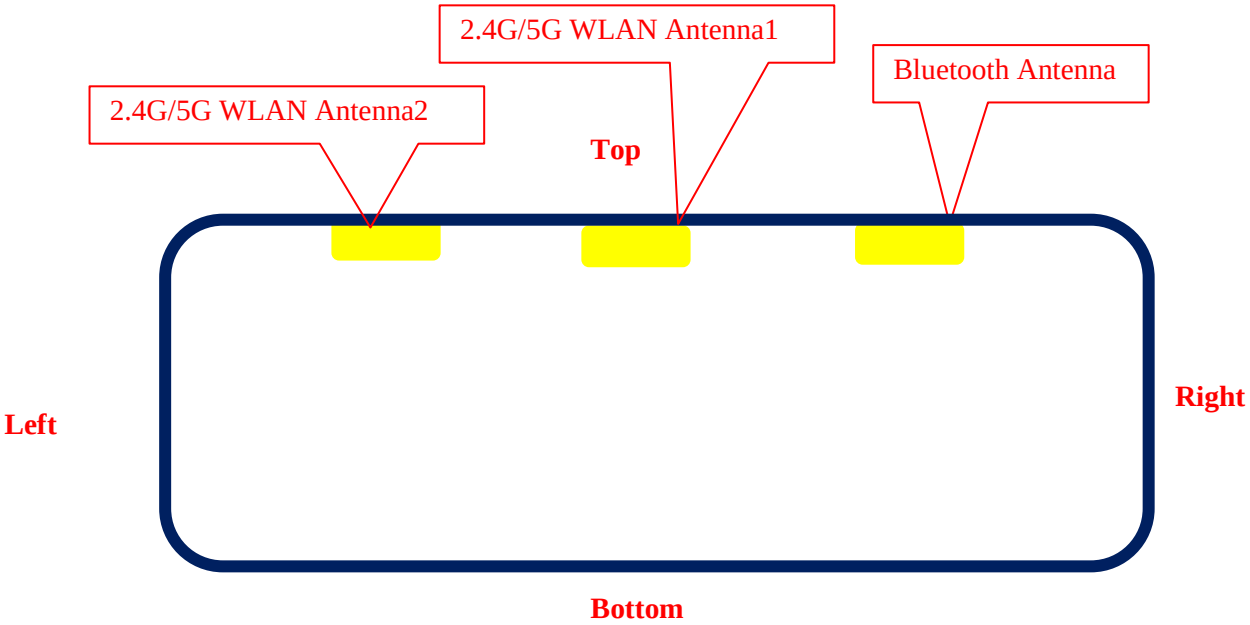

EUT Front View

Antenna Distance To Edge:

Antenna Distance To Edge(mm)						
Antenna	**Front**	**Back**	**Left**	**Right**	**Top**	**Bottom**
2.4G/5G WLAN Antenna1	< 5	< 5	109	117	< 5	93
2.4G/5G WLAN Antenna2	< 5	< 5	54	175	< 5	93
Bluetooth Antenna	< 5	< 5	175	54	< 5	93

Standalone SAR test exclusion considerations

Mode	Frequency (MHz)	Output Power (dBm)	Output Power (mW)	Distance (mm)	Calculated value	Threshold (1-g)	SAR Test Exclusion
2.4G WLAN1	2462	15.0	31.62	0	9.9	3	No
2.4G WLAN2	2462	15.0	31.62	0	9.9	3	No
5.2G WLAN1	5240	14.0	25.12	0	11.5	3	No
5.2G WLAN2	5240	13.0	19.95	0	9.1	3	No
5.8G WLAN1	5825	15.5	35.48	0	17.1	3	No
5.8G WLAN2	5825	15.5	35.48	0	17.1	3	No
Bluetooth	2480	8.0	6.31	0	2.0	3	Yes

NOTE:

The 1-g and 10-g SAR test exclusion thresholds for 100 MHz to 6 GHz at test separation distances ≤ 50 mm are determined by:

[(max. power of channel, including tune-up tolerance, mW)/(min. test separation distance, mm)] ·
[√f(GHz)] ≤ 3.0 for 1-g SAR and ≤7.5 for 10-g extremity SAR, where

1. f(GHz) is the RF channel transmit frequency in GHz.
2. Power and distance are rounded to the nearest mW and mm before calculation.
3. The result is rounded to one decimal place for comparison.
4. When the minimum test separation distance is < 5 mm, a distance of 5 mm is applied to determine SAR test Exclusion.

Standalone SAR estimation:

Mode	Frequency (MHz)	Output Power (dBm)	Output Power (mW)	Distance (mm)	Estimated 1-g (W/kg)
BT Body	2480	8.0	6.31	0	0.26

When standalone SAR test exclusion applies to an antenna that transmits simultaneously with other antennas, the standalone SAR must be estimated according to following to determine simultaneous transmission SAR test exclusion:

[(max. power of channel, including tune-up tolerance , mW)/(min. test separation distance,mm)] ·
[√f(GHz)/x]
W/kg for test separation distances ≤50 mm;
where x = 7.5 for 1-g SAR.
When the minimum test separation distance is < 5 mm, a distance of 5 mm is applied to determine SAR test Exclusion

Standalone SAR test exclusion distance considerations:

Mode	Frequency (MHz)	Max Target Power (dBm)	P_{Max} (mW)	Exclusion distance (mm)
2.4G WLAN ANT1	2462	15.0	31.62	16
2.4G WLAN ANT2	2462	15.0	31.62	16
5.2G WLAN ANT1	5240	14.0	25.12	19
5.2G WLAN ANT2	5240	13.0	19.95	15
5.8G WLAN ANT1	5825	15.5	35.48	29
5.8G WLAN ANT2	5825	15.5	35.48	29

SAR test exclusion for the EUT edge considerations Result

Antenna Distance To Edge(mm)						
Mode	**Front**	**Back**	**Left**	**Right**	**Top**	**Bottom**
2.4G Wi-Fi ANT1	**Required**	**Required**	Exclusion	Exclusion	**Required**	Exclusion
2.4G Wi-Fi ANT2	**Required**	**Required**	Exclusion	Exclusion	**Required**	Exclusion
5.2G Wi-Fi ANT1	**Required**	**Required**	Exclusion	Exclusion	**Required**	Exclusion
5.2G Wi-Fi ANT2	**Required**	**Required**	Exclusion	Exclusion	**Required**	Exclusion
5.8G Wi-Fi ANT1	**Required**	**Required**	Exclusion	Exclusion	**Required**	Exclusion
5.8G Wi-Fi ANT2	**Required**	**Required**	Exclusion	Exclusion	**Required**	Exclusion

Note:

Required: The distance to Edge is less than exclusion distance, testing is required.
Exclusion: The distance to Edge is more than exclusion distance, testing is not required.

SAR MEASUREMENT RESULTS

This page summarizes the results of the performed dosimetric evaluation.

SAR Test Data

Environmental Conditions

Temperature:	23.1-23.9 ℃
Relative Humidity:	45-59 %
ATM Pressure:	101 kPa
Test Date:	2023/06/07

Testing was performed by Jacky Yang, Ryse Chai.

2.4G WLAN ANT1:

EUT Position	Frequency (MHz)	Test Mode	Max. Meas. Power (dBm)	Max. Rated Power (dBm)	Scaled Factor	1g SAR (W/kg)			
						Duty Cycle (%)	Meas. SAR	Scaled SAR	Plot
Body Front (0mm)	2412	802.11b	/	/	/	/	/	/	/
	2437	802.11b	14.54	15.0	1.112	99.41	0.092	0.10	1#
	2462	802.11b	/	/	/	/	/	/	/
Body Back (0mm)	2412	802.11b	/	/	/	/	/	/	/
	2437	802.11b	14.54	15.0	1.112	99.41	0.117	0.13	2#
	2462	802.11b	/	/	/	/	/	/	/
Body Top (0mm)	2412	802.11b	/	/	/	/	/	/	/
	2437	802.11b	14.54	15.0	1.112	99.41	0.330	0.37	3#
	2462	802.11b	/	/	/	/	/	/	/

2.4G WLAN ANT2:

EUT Position	Frequency (MHz)	Test Mode	Max. Meas. Power (dBm)	Max. Rated Power (dBm)	Scaled Factor	1g SAR (W/kg)			
						Duty Cycle (%)	Meas. SAR	Scaled SAR	Plot
Body Front (0mm)	2412	802.11b	/	/	/	/	/	/	/
	2437	802.11b	14.76	15.0	1.057	99.41	0.177	0.19	4#
	2462	802.11b	/	/	/	/	/	/	/
Body Back (0mm)	2412	802.11b	/	/	/	/	/	/	/
	2437	802.11b	14.76	15.0	1.057	99.41	0.288	0.31	5#
	2462	802.11b	/	/	/	/	/	/	/
Body Top (0mm)	2412	802.11b	/	/	/	/	/	/	/
	2437	802.11b	14.76	15.0	1.057	99.41	0.698	0.74	6#
	2462	802.11b	/	/	/	/	/	/	/

Note:
1. When the highest *reported* SAR for DSSS is adjusted by the ratio of OFDM to DSSS specified maximum output power and the adjusted SAR is≤ 1.2 W/kg, OFDM SAR is not required.
2. When SAR or MPE is not measured at the maximum power level allowed for production units, the results must be scaled to the maximum tune-up tolerance limit according to the power applied to the individual channels tested to determine compliance.
3. When the same maximum power is specified for multiple transmission modes in a frequency band, the largest channel bandwidth, lowest order modulation, lowest data rate and lowest order 80211b/g/n mode is use for SAR measurement, on the highest measured output power channel in the initial test configuration, for each frequency band.
4. According 2016 Oct. TCB, for SAR testing of 2.4G WIFI 802.11b signal with non-100% duty cycle, the measured SAR is scaled-up by the duty cycle scaling factor which is equal to “1/(duty cycle)”.

5.2G WLAN ANT1:

EUT Position	Frequency (MHz)	Test Mode	Max. Meas. Power (dBm)	Max. Rated Power (dBm)	Scaled Factor	1g SAR (W/kg)			
						Duty Cycle (%)	Meas. SAR	Scaled SAR	Plot
Body Front (0mm)	5180	802.11a	/	/	/	/	/	/	/
	5200	802.11a	13.42	14.0	1.143	95.86	0.252	0.30	7#
	5240	802.11a	/	/	/	/	/	/	/
Body Back (0mm)	5180	802.11a	/	/	/	/	/	/	/
	5200	802.11a	13.42	14.0	1.143	95.86	0.325	0.39	8#
	5240	802.11a	/	/	/	/	/	/	/
Body Top (0mm)	5180	802.11a	/	/	/	/	/	/	/
	5200	802.11a	13.42	14.0	1.143	95.86	0.584	0.70	9#
	5240	802.11a	/	/	/	/	/	/	/

5.2G WLAN ANT2:

EUT Position	Frequency (MHz)	Test Mode	Max. Meas. Power (dBm)	Max. Rated Power (dBm)	Scaled Factor	1g SAR (W/kg)			
						Duty Cycle (%)	Meas. SAR	Scaled SAR	Plot
Body Front (0mm)	5180	802.11a	/	/	/	/	/	/	/
	5200	802.11a	12.48	13.0	1.127	96.55	0.066	0.08	10#
	5240	802.11a	/	/	/	/	/	/	/
Body Back (0mm)	5180	802.11a	/	/	/	/	/	/	/
	5200	802.11a	12.48	13.0	1.127	96.55	0.161	0.19	11#
	5240	802.11a	/	/	/	/	/	/	/
Body Top (0mm)	5180	802.11a	/	/	/	/	/	/	/
	5200	802.11a	12.48	13.0	1.127	96.55	0.216	0.25	12#
	5240	802.11a	/	/	/	/	/	/	/

5.8G WLAN ANT1:

EUT Position	Frequency (MHz)	Test Mode	Max. Meas. Power (dBm)	Max. Rated Power (dBm)	Scaled Factor	1g SAR (W/kg)			
						Duty Cycle (%)	Meas. SAR	Scaled SAR	Plot
Body Front (0mm)	5745	802.11a	/	/	/	/	/	/	/
	5785	802.11a	15.12	15.5	1.091	96.53	0.115	0.13	13#
	5825	802.11a	/	/	/	/	/	/	/
Body Back (0mm)	5745	802.11a	/	/	/	/	/	/	/
	5785	802.11a	15.12	15.5	1.091	96.53	0.319	0.36	14#
	5825	802.11a	/	/	/	/	/	/	/
Body Top (0mm)	5745	802.11a	/	/	/	/	/	/	/
	5785	802.11a	15.12	15.5	1.091	96.53	0.392	0.44	15#
	5825	802.11a	/	/	/	/	/	/	/

5.8G WLAN ANT2:

EUT Position	Frequency (MHz)	Test Mode	Max. Meas. Power (dBm)	Max. Rated Power (dBm)	Scaled Factor	1g SAR (W/kg)			
						Duty Cycle (%)	Meas. SAR	Scaled SAR	Plot
Body Front (0mm)	5745	802.11a	/	/	/	/	/	/	/
	5785	802.11a	15.13	15.5	1.089	95.86	0.058	0.07	16#
	5825	802.11a	/	/	/	/	/	/	/
Body Back (0mm)	5745	802.11a	/	/	/	/	/	/	/
	5785	802.11a	15.13	15.5	1.089	95.86	0.071	0.08	17#
	5825	802.11a	/	/	/	/	/	/	/
Body Top (0mm)	5745	802.11a	/	/	/	/	/	/	/
	5785	802.11a	15.13	15.5	1.089	95.86	0.090	0.10	18#
	5825	802.11a	/	/	/	/	/	/	/

Note:

1. When SAR or MPE is not measured at the maximum power level allowed for production units, the results must be scaled to the maximum tune-up tolerance limit according to the power applied to the individual channels tested to determine compliance
2. According 2016 Oct. TCB, for SAR testing of 5G WIFI 802.11a signal with non-100% duty cycle, the measured SAR is scaled-up by the duty cycle scaling factor which is equal to “1/(duty cycle)”.

SAR Measurement Variability

In accordance with published RF Exposure KDB procedure 865664 D01 SAR measurement 100 MHz to 6 GHz v01. These additional measurements are repeated after the completion of all measurements requiring the same head or body tissue-equivalent medium in a frequency band. The test device should be returned to ambient conditions (normal room temperature) with the battery fully charged before it is re-mounted on the device holder for the repeated measurement(s) to minimize any unexpected variations in the repeated results

1) Repeated measurement is not required when the original highest measured SAR is < 0.80 W/kg; steps 2) through 4) do not apply.
2) When the original highest measured SAR is≥ 0.80 W/kg, repeat that measurement once.
3) Perform a second repeated measurement only if the ratio of largest to smallest SAR for the original and first repeated measurements is > 1.20 or when the original or repeated measurement is ≥ 1.45 W/kg (~ 10% from the 1-g SAR limit).
4) Perform a third repeated measurement only if the original, first or second repeated measurement is ≥1.5 W/kg and the ratio of largest to smallest SAR for the original, first and second repeated measurements is > 1.20.

The Highest Measured SAR Configuration in Each Frequency Band

Body

SAR probe calibration point	Frequency Band	Freq.(MHz)	EUT Position	Meas. SAR (W/kg)		Largest to Smallest SAR Ratio
				Original	Repeated	
/	/	/	/	/	/	/

Note:

1. Second Repeated Measurement is not required since the ratio of the largest to smallest SAR for the original and first repeated measurement is not > 1.20.
2. The measured SAR results **do not** have to be scaled to the maximum tune-up tolerance to determine if repeated measurements are required.
3. SAR measurement variability must be assessed for each frequency band, which is determined by the **SAR probe calibration point and tissue-equivalent medium** used for the device measurements..

SAR SIMULTANEOUS TRANSMISSION DESCRIPTION

Simultaneous Transmission:

Description of Simultaneous Transmit Capabilities		
Transmitter Combination	**Simultaneous?**	**Hotspot?**
2.4G WLAN ANT1 + 2.4G WLAN ANT2	√	×
5G WLAN ANT1 + 5G WLAN ANT2	√	×
2.4G WLAN + 5G WLAN	×	×
WLAN ANT2 + WLAN ANT2 + Bluetooth	√	×

Simultaneous SAR test exclusion considerations:

Mode(SAR1+SAR2)	Position	Reported SAR(W/kg)			ΣSAR < 1.6W/kg
		SAR1	SAR2	SAR3	
2.4G WLAN(ANT1)+2.4G WLAN(ANT2) + Bluetooth	Body	0.37	0.74	0.26	**1.37**
5.2G WLAN(ANT1)+5.2G WLAN(ANT2) + Bluetooth	Body	0.70	0.25	0.26	1.21
5.8G WLAN(ANT1)+5.8G WLAN(ANT2) + Bluetooth	Body	0.44	0.10	0.26	0.80

Conclusion:

Sum of SAR: **ΣSAR ≤ 1.6 W/kg** therefore simultaneous transmission SAR with SPLSR is **not required**.

SAR Plots

Please Refer to the Attachment.

APPENDIX A MEASUREMENT UNCERTAINTY

The uncertainty budget has been determined for the measurement system and is given in the following Table.

Measurement uncertainty evaluation for IEEE1528-2013 SAR test

Source of uncertainty	Tolerance/ uncertainty ± %	Probability distribution	Divisor	ci (1 g)	ci (10 g)	Standard uncertainty ± %, (1 g)	Standard uncertainty ± %, (10 g)
Measurement system							
Probe calibration	6.55	N	1	1	1	6.6	6.6
Axial Isotropy	4.7	R	√3	1	1	2.7	2.7
Hemispherical Isotropy	9.6	R	√3	0	0	0.0	0.0
Boundary effect	1.0	R	√3	1	1	0.6	0.6
Linearity	4.7	R	√3	1	1	2.7	2.7
Detection limits	1.0	R	√3	1	1	0.6	0.6
Readout electronics	0.3	N	1	1	1	0.3	0.3
Response time	0.0	R	√3	1	1	0.0	0.0
Integration time	0.0	R	√3	1	1	0.0	0.0
RF ambient conditions – noise	1.0	R	√3	1	1	0.6	0.6
RF ambient conditions–reflections	1.0	R	√3	1	1	0.6	0.6
Probe positioner mech. Restrictions	0.8	R	√3	1	1	0.5	0.5
Probe positioning with respect to phantom shell	6.7	R	√3	1	1	3.9	3.9
Post-processing	2.0	R	√3	1	1	1.2	1.2
Test sample related							
Test sample positioning	2.8	N	1	1	1	2.8	2.8
Device holder uncertainty	6.3	N	1	1	1	6.3	6.3
Drift of output power	5.0	R	√3	1	1	2.9	2.9
Phantom and set-up							
Phantom uncertainty (shape and thickness tolerances)	4.0	R	√3	1	1	2.3	2.3
Liquid conductivity target)	5.0	R	√3	0.64	0.43	1.8	1.2
Liquid conductivity meas.)	2.5	N	1	0.64	0.43	1.6	1.1
Liquid permittivity target)	5.0	R	√3	0.6	0.49	1.7	1.4
Liquid permittivity meas.)	2.5	N	1	0.6	0.49	1.5	1.2
Combined standard uncertainty		RSS				12.2	12.0
Expanded uncertainty 95 % confidence interval)						24.3	23.9

APPENDIX B EUT TEST POSITION PHOTOS

Please Refer to the Attachment.

APPENDIX C PROBE CALIBRATION CERTIFICATES

Please Refer to the Attachment.

APPENDIX D DIPOLE CALIBRATION CERTIFICATES

Please Refer to the Attachment.

******* END OF REPORT *******