Window Cleaning Robot

User Manual

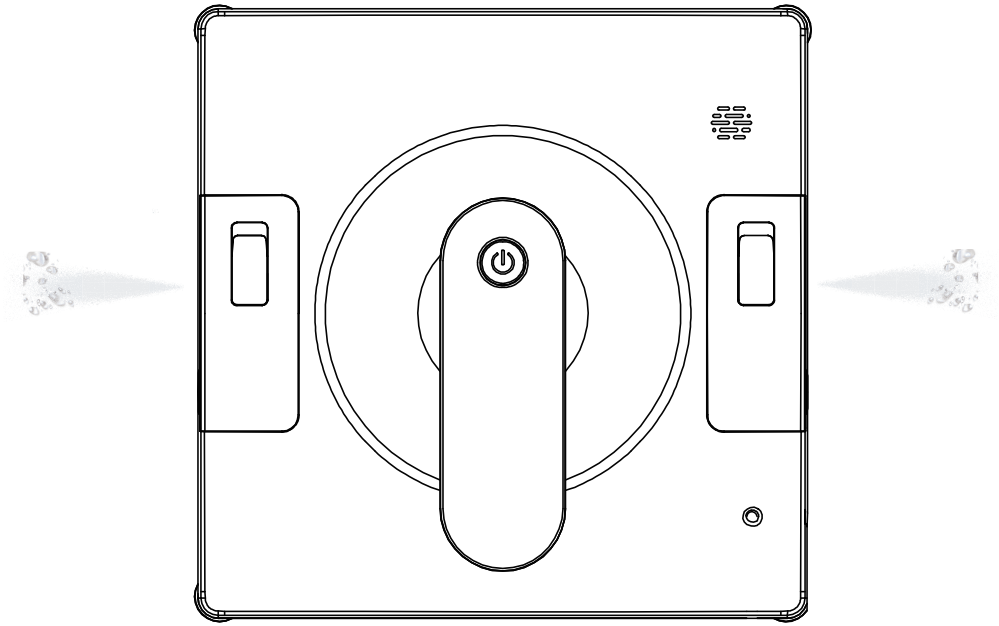

Model:YW500

Read this booklet thoroughly before using and save it for future reference

Content

1.Safety Regulations.....2-3

2.Product Components.....4

Product and Accessories.....4

Technical Parameter.....4

Product Parts.....5

Remote Control.....6

3.Product Usage.....7

Note Before Use.....7

Installation of Cleaning Cloth.....8

Connecting with Power Adapter.....8

Assembly of Safety Rope.....8

Installation of Safety Rope Buckle.....9

Spray Cleaning Solution.....9

How to Use.....10

Complete Cleaning.....11

4.Maintenance.....12

Clean Cleaning Cloth.....12

Clean Wheels.....12

5.Indicator Light and Prompt Sound.....13

6.Trouble Shooting.....14

1. Safety Regulations

During using this product, please read and follow the following safety instructions !
Read this instruction manual thoroughly and carefully before using the product !
Keep this user manual for future reference !

1.The product cannot be used by children under the age of 8, or persons with physical or mental disabilities. If needed, please use it under the supervision and guidance of the guardian. Please keep children away from the product when the product is working or play with the product as a toy.
2. Do not use this product in extreme environments (temperature below 0° C and tem perature above 40° C).
3. When the product is working, please keep the product in the status of power-on. The built-in safety backup battery of the product is only used to maintain the product in the case of a sudden power failure, to keep the product adsorbed on the glass within a limited time and not fall off. It should not be used as a power supply for normal work to avoid risks.
4. During the use of this product, please ensure that someone is watching over it, and can provide help for the product if necessary. When the machine is working, remove those valuables under the machine and make sure that no animals are under the working machine.
5. Only use in home environment and indoor environment, do not use in commercial and industrial places.
6. Do not use this product on glass with cracks, advertising paper and bumping to avoid the risk of glass breaking and product falling-off.
7. Please use this product according to the instructions in the manual, and only use the accessories recommended or sold by the manufacturer; only the original rechargeable batteries and adapters specially designed by the manufacturer are applicable.
8. Make sure the power supply voltage matches with the voltage marked on the adapter.
9. Make sure to use this product on the glass that thickness is more than 5mm.
10. It is forbidden to use it on a large area of wet or oily glass to avoid the risk of falling-off due to the slippage of the product.
11. The product should be kept away from heat sources or flammable substances.
12. It is forbidden to use this product when the product is not completely absorbed on the glass or the product has obvious damage.
13. Do not place this product in water or other liquids to reduce the risk of electric shock; Do not store this product where it may be dropped or pulled into a tub or sink.
14. Do not touch the plug or product with wet hands.
15. Battery charging cannot be carried out in an environment that is too hot or too cold, which may affect the service life of the battery.

16. The product cannot be used when the adapter has no power supply.
17. It is forbidden to charge the machine on household appliances, damp place or the place with fire source, so as to avoid unnecessary losses.
18. Please use the power cord carefully to avoid damage. It is forbidden to use the power cord to drag, lift the product or use the power cord as a handle; It is forbidden to close the window and clamp the power cord or place items on the power cord during use. The power cord should be kept away from heat sources.
19. Do not use this product with a damaged power cord or power outlet. Do not use the product when it fails to work properly due to the falling-off, damage or water ingress. To avoid injury, the product should be repaired by the manufacturer or its after-sales service department.
20. If the flexible cord of the power cord is damaged, it must be replaced by a professional from the manufacturer, its maintenance department or similar department in order to avoid danger.
21. The plug must be unplugged from the power socket before maintaining or cleaning the product, but do not unplug the power plug from the socket by pulling the power cord.
22. The battery must be replaced by the professionals from the manufacturer, its maintenance department or similar.
23. Before the product is scrapped, the battery must be removed and scrapped in accordance with local laws and regulations and environmental regulations.
24. If you need to scrap this product, please cut off the power supply of the product first, and then remove the battery from the product.
25. Please dispose of used batteries in accordance with local laws and regulations and environmental regulations.
26. Incineration of the product is prohibited even if the product has been severely damaged, as the battery of the product may explode. 。
27. Please use the product according to the instructions in this manual. The company is not responsible for any loss or injury caused by improper use.
28. It is strictly forbidden for children, mentally handicapped persons or people who lack of common sense and experience to use this product without the guidance of a special person.
29. When the machine is working, supervise the behavior of children to ensure that this product is not being played with.
30. Children are strictly prohibited from playing with this product.
31. Children are strictly prohibited from cleaning and maintaining the product without supervision.

2. Product Components

2.1 Product and Accessories

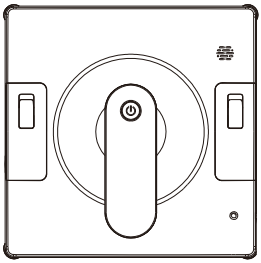

The Robot

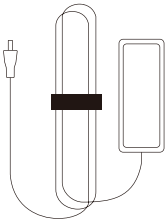

Power Adapter

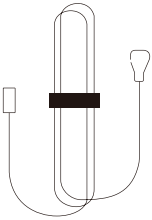

Safety Rope

Remote Control

User Manual

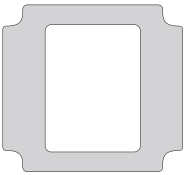

Cleaning Pad

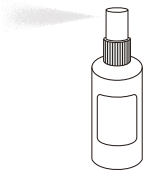

Water Spraying Bottle

Water Injection Bottle

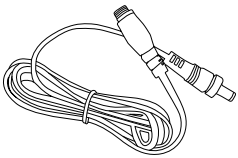

Extension cable

2.2 Technical Parameter

Voltage	24V ⎓	Rated Power	72W
Remote Control			
Rated Input Voltage		3V ⎓	
Power Adapter			
Input: 100-240V~50/60Hz		Output: 24V == 3.0A	

2.3 Product Parts

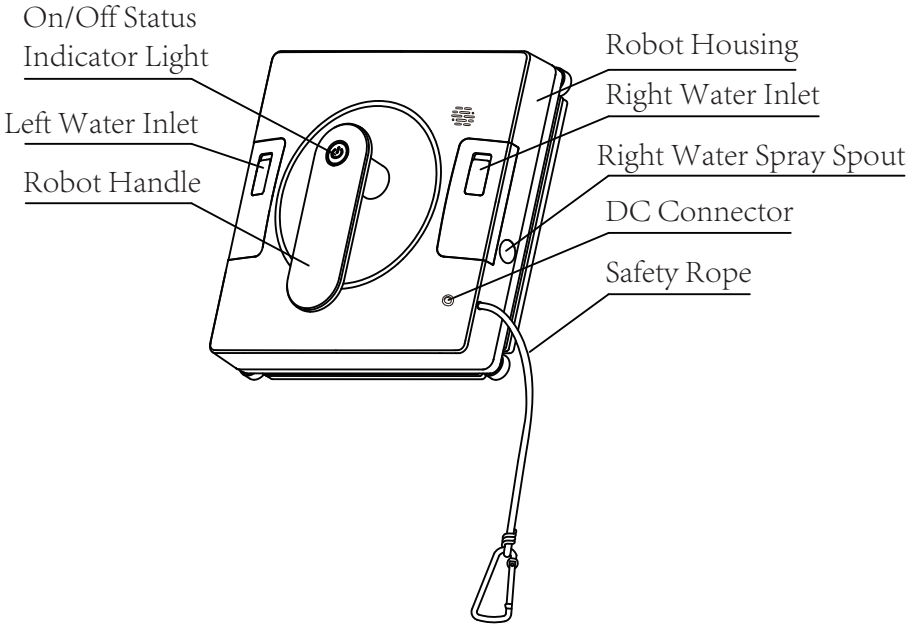

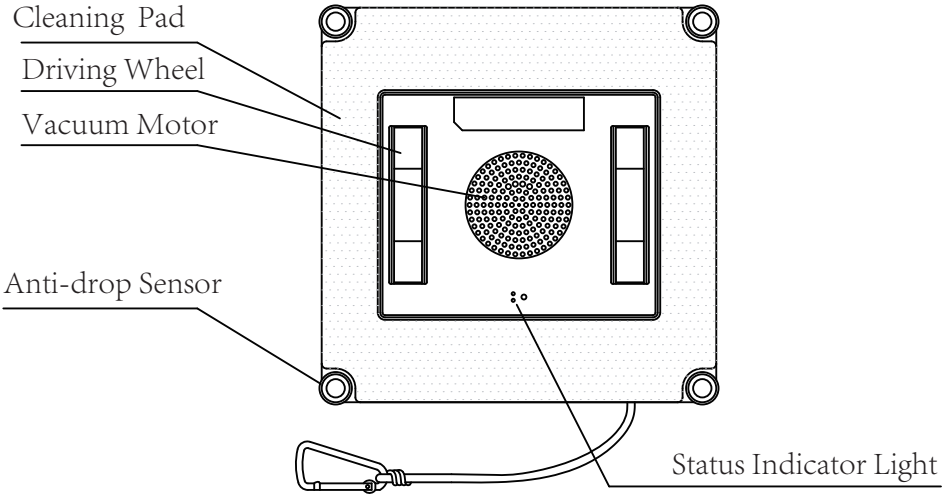

2.4 Remote Control

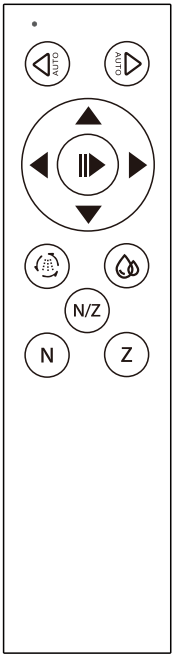

AUTO	Auto Left： auto clean from left with N path
AUTO	Auto Right: auto clean from right with N path
	Arrow Key: move up/down/left/right manually
	Start/Stop: start automatic cleaning/ stop cleaning
	Auto Water Spray: when the robot is cleaning, it will spray water automatically. Press this button to turn off the automatic water spraying mode
	Manual Water Spray: spray water once for each short press
N/Z	N +Z： start with N path first , and then with Z path
N	N path cleaning mode
Z	Z path cleaning mode

Start/Stop Cleaning

After the robot adsorbs successfully, press"On/Off " button on the robot or "▶"on the remote control to start automatic cleaning.

Default cleaning mode is N+Z path.

Press " ▶ "to start /stop cleaning

In the status of " Stop", press" ✥ "button to control the direction of the robot, and to switch cleaning path.

" N " for vertical glass.
Clean with "N" path

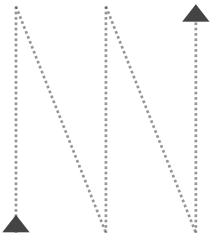

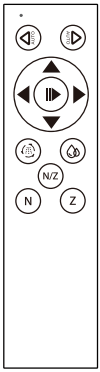

" Z " for horizontal glass
Clean with "Z" path

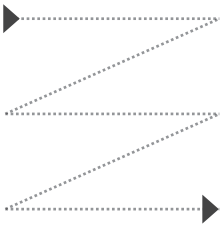

3. Product Usage

3.1 Note before use

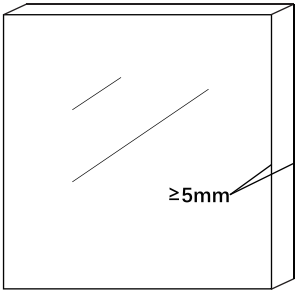

Use the robot on framed glass which frame thickness (from the glass surface to the frame surface) is more than 5mm.

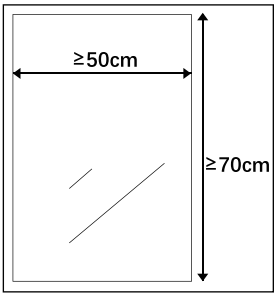

Note:
Use this product on framed glass with the measure of area larger than 50*70cm.

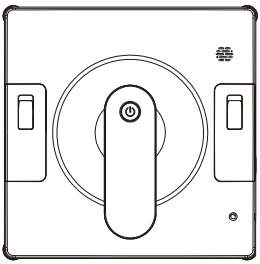

Connect with power adapter, if red and blue light flash alternately, it indicates that the robot is charging. Keep charging until the blue light remains on (about 1 hour). Robot will not be ready for work when red light flashes.

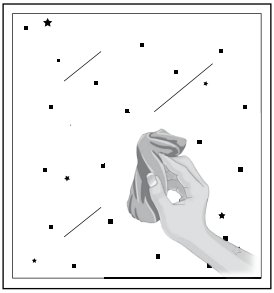

If there is heavy dust on glass surface, please clean a small area which size is similar with the product for adsorption before use.

* If there are unmovable obstacles (such as protective fence, furniture, etc.) in front of the window, only when the distance between the window and the obstacle is more than 11cm can this product be used.
* When the product is working on a horizontal glass surface, the remote control should be used to control the operation of the product.
* If you use this product on a window that is not completely vertical, the product may not work properly, please make sure that someone is watching over the product and can provide help if necessary.
* This product cannot be used upside down.
* Please use with the cleaning solution specially formulated by the company. Using other cleaning solution may result in poor cleaning effect or damage to the product.

3.2 Installation of cleaning pad

Align the clean pad with the product and stick it flatly inside the adsorption plate at the bottom of the product

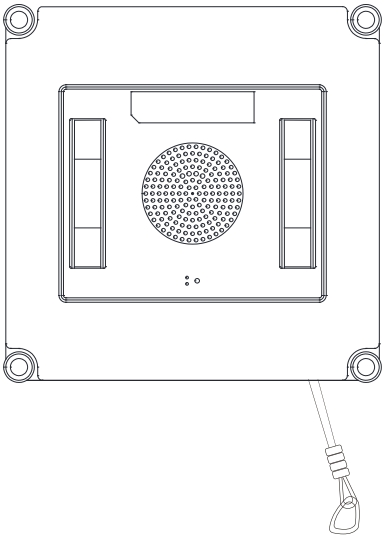

3.3 Connecting with power adapter

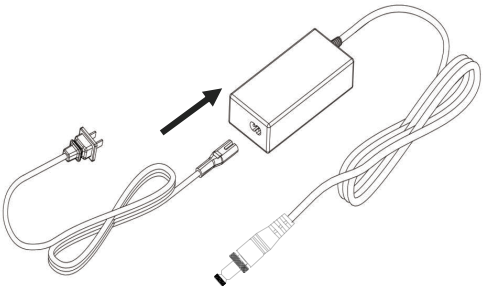

3.4 Assembly of safety rope

Before using the product, please fix the product with a safety rope assembly to improve product safety performance

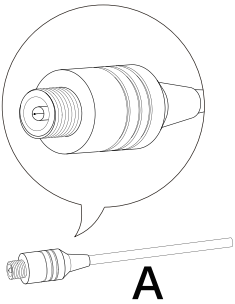

Power cord of the robot

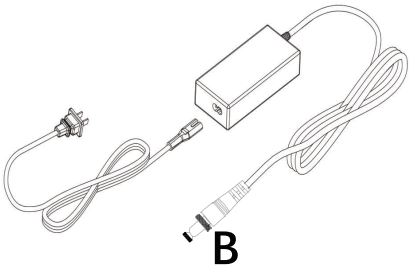

Power cord of adapter

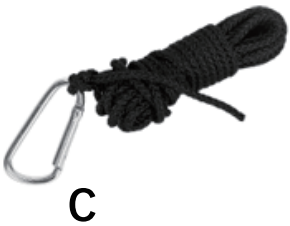

Safety rope

Use extension cords if needed

Depending on the actual distance or glass size, an extension cord can be used to increase the length. Each extension cord is 2 meters.
Note: when the product is used outdoors, 1 extension cord can be used at most.

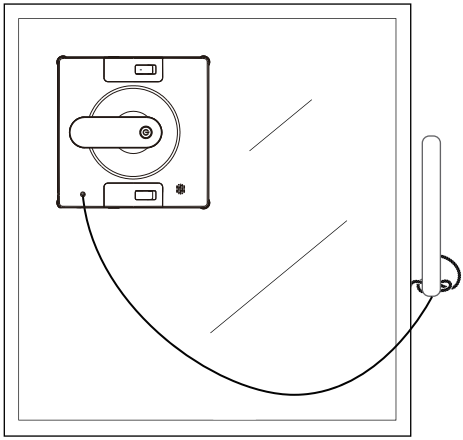

3.5 Installation of safety rope buckle

When using the product, the safety rope needs to be fixed with a certain position indoors.

When cleaning the glass outdoors, please close the window, the gap of the window is slightly larger than the diameter of safety rope. (Do not exceed the diameter of safety rope buckle)

3.6 Spray cleaning solution

* Spray cleaning solution evenly on the cleaning pad, the amount can be determined according to the contaminations of glass. It is recommended to spray 8 times evenly on the wide side of cleaning pad.
* After spraying, wipe off extra cleaning solution on the wheels with dry cloth to avoid slipping .
* Please use cleaning solution provided by the manufacturer. Using other solution may result in less-effective cleaning results or cause damage to the product.

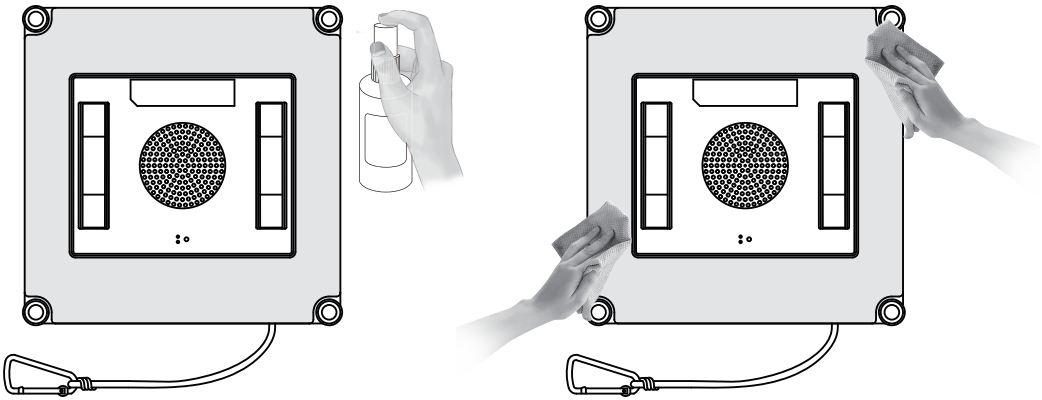

3.7 How to use

1. Connect with power adapter

Connect the DC connector of the adapter to the robot and connect the plug of the adapter to a socket. Turn on the power supply, blue light of the robot is on.

* Do not cut off the power supply while the product is cleaning. If the power is cut off, the product will be at risk of falling down.

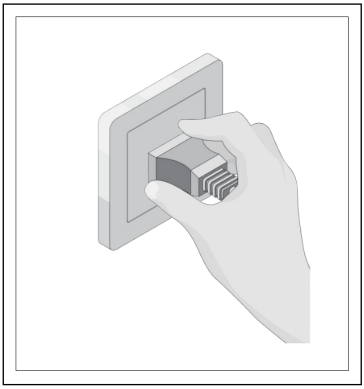

2. Short press “On/Off” button

Short press “ ⏻ ” button, blue light flashes, the vacuum motor starts working.

* Keep vacuum motor away from small items to prevent from blockage.

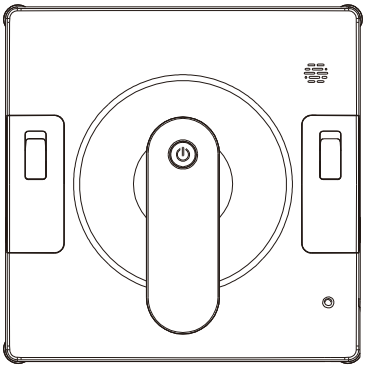

3. Attach to the glass

Put the robot on the glass with distance no less than 10cm to the frame of glass, after successful adsorption, blue light remains on.

* When there are ummovable obstacles (such as protective fence, furniture, etc.) in front of window, only when the gap between window and the obstacle is more than 11cm can this product be used.

3.8 Complete cleaning

Robot returns to the position near to its starting place when cleaning is completed, and with beep sound.

1. Remove the product

Hold on the handle and press "⏻" button about 3-5 seconds to switch off the robot. Take down the robot when motor stop working. Use a dry cloth to gently wipe off the product imprint on the glass.

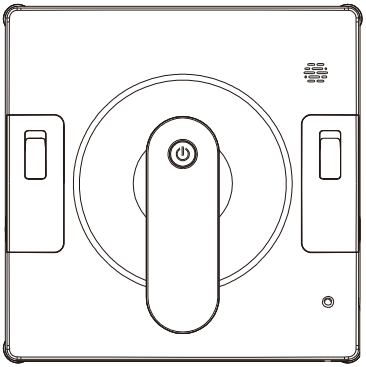

2. Cut off the power supply

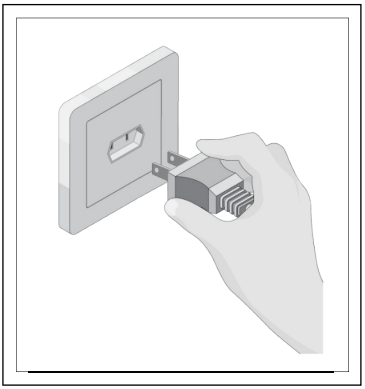

Note: If red light alarm occurs during cleaning, please check whether or not the power adapter is connected and powered normally. After the connection is normal, blue light of the product remains on, and the robot will automatically resume working;

If the power adapter is connected to the product normally, and red light alarm still occurs, please press the arrow key on remote control to remove the product. When blue ight remains on, press "On/Off" button on remote control to resume working.

4.Maintenance

4.1 Clean cleaning pad

Take off the cleaning pad,
soak in water (about 20℃) for 2 minutes,
then gently wash by hands and
dry in the air before use

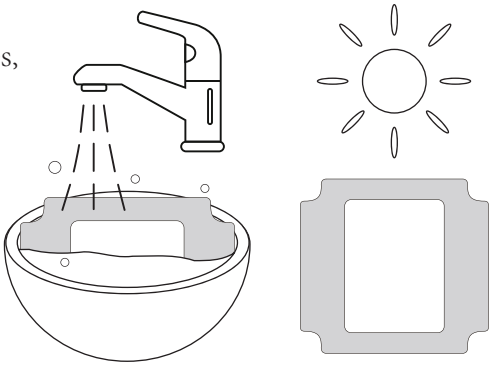

* To avoid slipping during use, please do not use the cleaning pad directly after washing.
Good maintenance is conducive to prolonging the service life of the pad.
After the product has been used for a period of time, if the pad cannot stick tightly to the velcro, replace it in time to achieve the best cleaning effect.

4.2 Clean wheels

1. Connect to power adapter,
blue led light remains on, press "" on remote control, wheels start to work.
Use clean cloth with some cleaning solution to clean the wheels.
Press "" button to stop wheels.

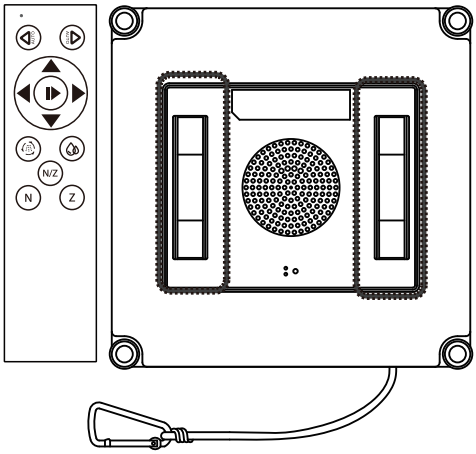

* To avoid slippage, please clean the dusty wheels or wet wheels timely.

5. Indicator Light & Prompt Sound

Red and blue light flash alternately	The safe backup battery is low battery, the robot is charging
Blue light remains on	1. The robot is powered on normally
	2. The robot adsorbed successfully and entered into standby state
Blue light flashes	Works normally, continue to operate the robot, attach the robot to the glass
Red light flashes	The power adapter is powered off
Red light remains on	1. If red light remains on during cleaning, it indicates that wheels is overloaded
	2. The robot enters into standy mode

6. Trouble Shooting

1	Red light remains on	Wheels overloaded	Press “N” path on remote control first then press “Z” path, it will turn to blue light Short press “On/Off” button on the robot, it will turn to blue light
2	Red light flashes with prompt sound	Power adapter disconnect with power supply	a. Connect with power supply, press On/Off button to resume cleaning b. In the case of power failure of the robot, press arrow keys on remote control, move the robot to an easily accessible place and remove the product * There are certain risks associated with using the remote control in the case of power failure of the robot, please make sure there is someone to provide help
3	Wheels-slippage, cleaning path is abnormal	Glass surface is too dirty	a. Clean the wheels b. Change cleaning cloth * This product is not suitable for cleaning those heavily dirty glass
4	Remote control non-working	When the robot is cleaning normally, only “Start/Stop” button on remote control works	Stop cleaning first, then press other buttons on remote control

FCC Statement

This device complies with part 15 of the FCC Rules. Operation is subject to the following two conditions: (1) This device may not cause harmful interference, and (2) this device must accept any interference received, including interference that may cause undesired operation.

Note: This equipment has been tested and found to comply with the limits for a Class B digital device, pursuant to part 15 of the FCC Rules. These limits are designed to provide reasonable protection against harmful interference in a residential installation. This equipment generates,uses and can radiate radio frequency energy and, if not installed and used in accordance with the instructions, may cause harmful interference to radio communications. However, there is no f this equipment does guarantee that interference will not occur in a particular installation. Icause harmful interference to radio or television reception, which can be determined by turning the equipment off and on, the user is encouraged to try to correct the interference by one or more of the following measures:

—Reorient or relocate the receiving antenna.

—Increase the separation between the equipment and receiver.

—Connect the equipment into an outlet on a circuit different from that to which the receiver is connected.

—Consult the dealer or an experienced radio/TV technician for help.

Note: The Grantee is not responsible for any changes or modifications not expressly approved by the party responsible for compliance. such modifications could void the user's authority to operate the equipment.

The device has been evaluated to meet general RF exposure requirement.
To maintain compliance with FCC's RF exposure guidelines, the distance must be at least 20 cm between the radiator and your body, and fully supported by the operating and installation configurations of the transmitter and its antenna(s).