TITLE

WIFI 6E FLEX CABLED 2X2 MIMO ANTENNA

TABLE OF CONTENTS

1.0 SCOPE

2.0 PRODUCT DESCRIPTION

3.0 APPLICABLE DOCUMENTS

4.0 ANTENNA PERFORMANCE

5.0 ASSEMBLY GUIDELINE

6.0 RF PERFORMANCE AS A FUNCTION OF IMPLEMENTATION

7.0 THE ANTENNA PERFORMANCE VARIATION WITH CABLE LENGTH

8.0 CHANGE HISTORY

WIFI 6E FLEX CABLED 2X2 MIMO ANTENNA

1.0 SCOPE

This specification describes the antenna application and surrounding. The information in this document is for reference and benchmark purposes only. The user is responsible for validating antenna RF performance based on the user's actual implementation.

Antenna illustrations in this document are generic representations. They are not intended to be an image of any antenna listed in the scope.

2.0 PRODUCT DESCRIPTION

2.1 PRODUCT NAME AND SERIES NUMBER (S)

Product name: WiFi 6E Flex Cabled 2x2 MIMO Antenna

Series Number: 208482

2.2 DESCRIPTION

Series 208482 is one monopole(Port 1) and one dipole(Port 2) type, and low profile flexible antenna for 2.4/5/6Hz band applications, including WiFi 6E, Bluetooth and Zigbee.It's made from Poly-flexible material, has a size form 55.20mm x 19.20mm x 0.16mm and has double-sided TESA adhesive for "peel and stick" easy mounting.

2.3 PRODUCT STRUCTURE INFORMATION

Please refer to PS-2084820100 for full information.

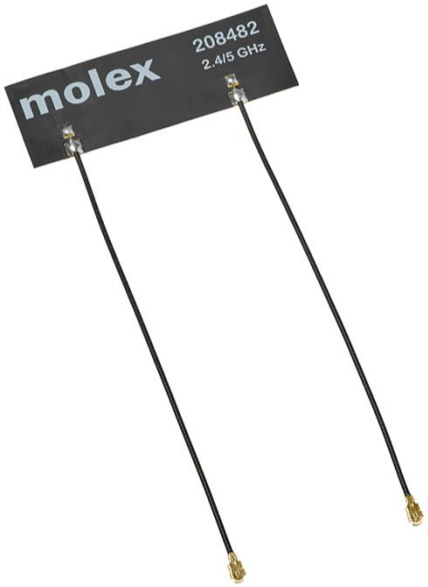

PRODUCT PHOTOGRAPH

3.0 APPLICABLE DOCUMENTS

DOCUMENT	NUMBER	DESCRIPTION
Sale Drawing (SD)	SD-2084820100	Mechanical Dimension of the product
Product Specification (PS)	PS-2084820100	Product Specification
Packing Drawing (PK)	PK-2084820100	Product packaging specifications

4.0 ANTENNA PERFORMANCE

4.1 RF TEST CONDITIONS

All measurements are done of the antenna mounted on a PC/ABS material block of 1.5mm thickness with VNA Agilent E5071C and Over-The-Air (OTA) chamber. All measurements in this document are done with the part No. 2084820100 with a cable length of 100mm.

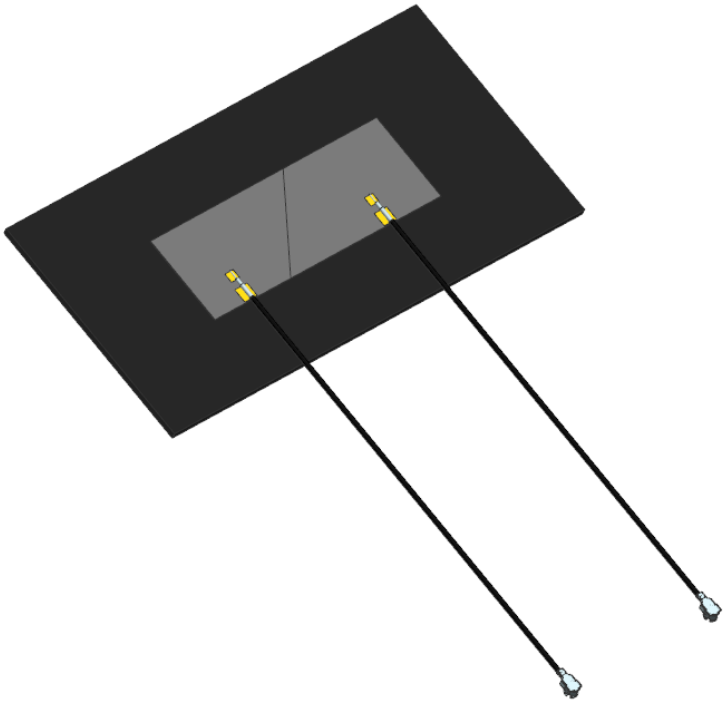

FIGURE4.1.1 ANTENNA LOADED WITH PC/ABS BLOCK OF 1.5MM THICKNESS

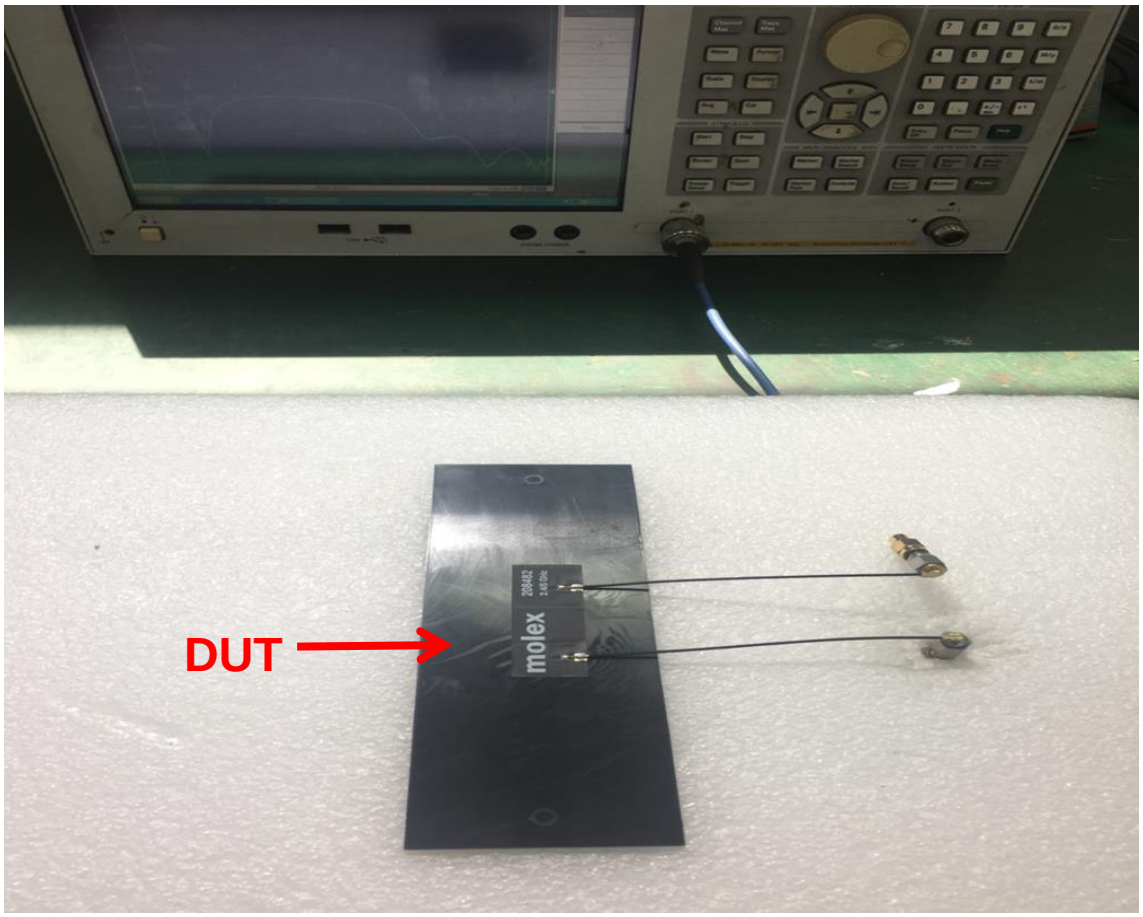

FIGURE4.1.2 ANTENNA LOADED WITH PC/ABS BLOCK OF 1.5MM THICKNESS TESTED WITH VNA E5071C

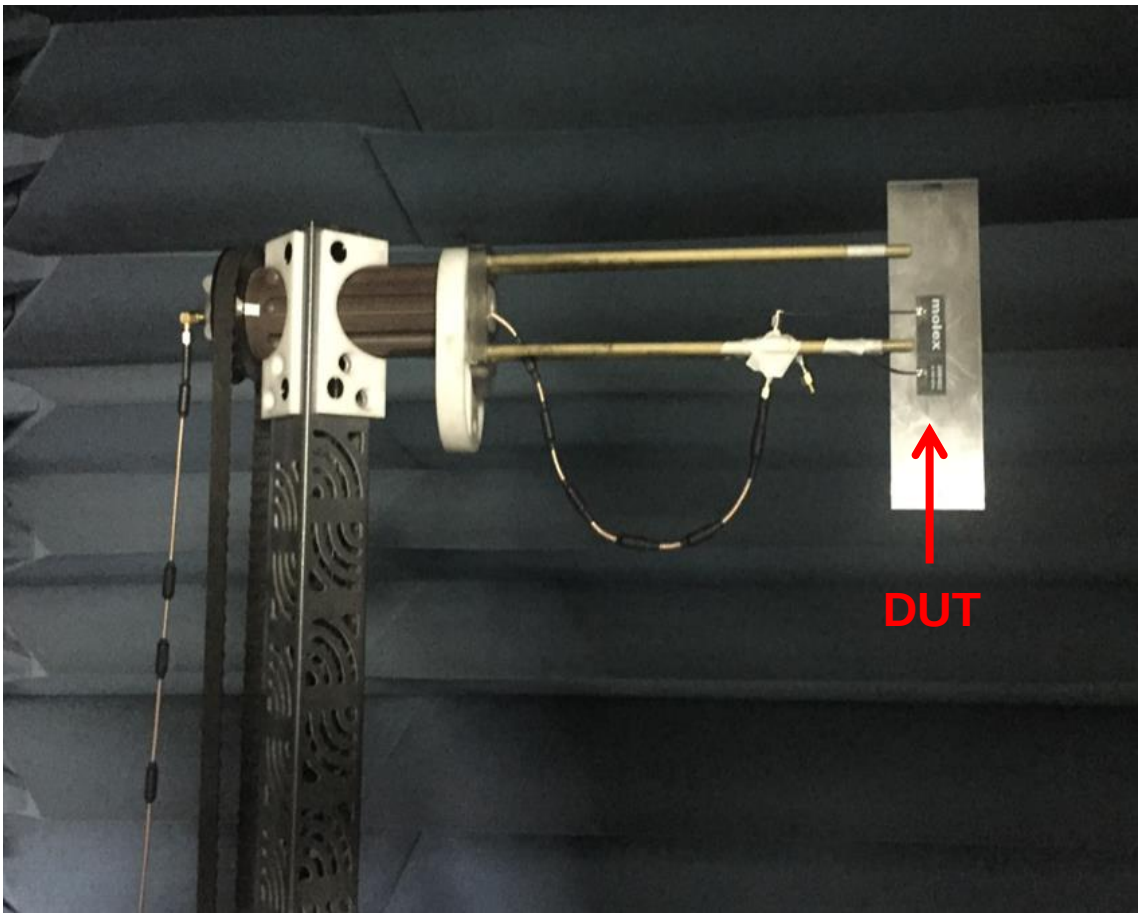

FIGURE4.1.3 ANTENNA LOADED WITH PC/ABS BLOCK OF 1.5MM THICKNESS TESTED IN OTA CHAMBER

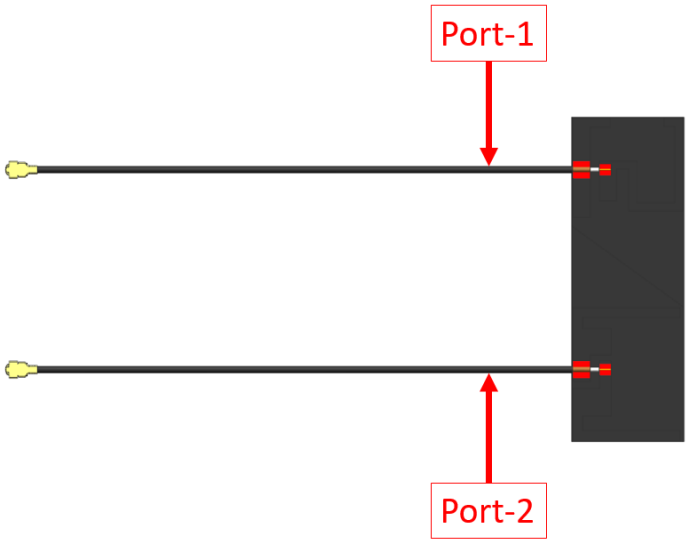

FIGURE4.1.4 ANTENNA TESTED EQUIPMENT

4.2 ANTENNA PERFORMANCE

Description	Equipment	Requirement Port 1		
Frequency Range	VNA E5071C	2.4-2.5GHz	5.15-5.85GHz	5.925-7.125GHz
Return Loss	VNA E5071C	<-8dB	<-13dB	<-8dB
Peak Gain (Max)	OTA Chamber	2.9 dBi	5.0 dBi	4.4 dBi
Average Total Efficiency	OTA Chamber	>65%	>75%	>65%
Polarization	OTA Chamber	Linear		
Input Impedance	VNA E5071C	50 ohms		

Description	Equipment	Requirement Port 2		
Frequency Range	VNA E5071C	2.4-2.5GHz	5.15-5.85GHz	5.925-7.125GHz
Return Loss	VNA E5071C	<-9dB	<-13dB	<-10dB
Peak Gain (Max)	OTA Chamber	3.4 dBi	5.9 dBi	5.1 dBi
Average Total Efficiency	OTA Chamber	>75%	>70%	>65%
Polarization	OTA Chamber	Linear		
Input Impedance	VNA E5071C	50 ohms		

Note that the above antenna performance is measured with just the antenna mounted on a PC/ABS block to similar a free-space condition. When implement into the system, the frequency resonant might be off-tune due to the loading of surrounding components especially metal plane. This off-tune can be compensated through matching. Although module manufacturers specify a peak gain limit, it is based on free-space conditions. The peak gain will be degraded by 1 to 2dBi in the actual implementation as the radiation pattern will change due to the surround components. As such, during selection of antenna, you can select one with high peak gain to compensate for the loss. Molex can offer assistant to choose the best location and best tuning in-order to meet this peak gain requirement.

4.3 RETURN LOSS PLOT

All measurements in this document are done with cable length of 100mm.

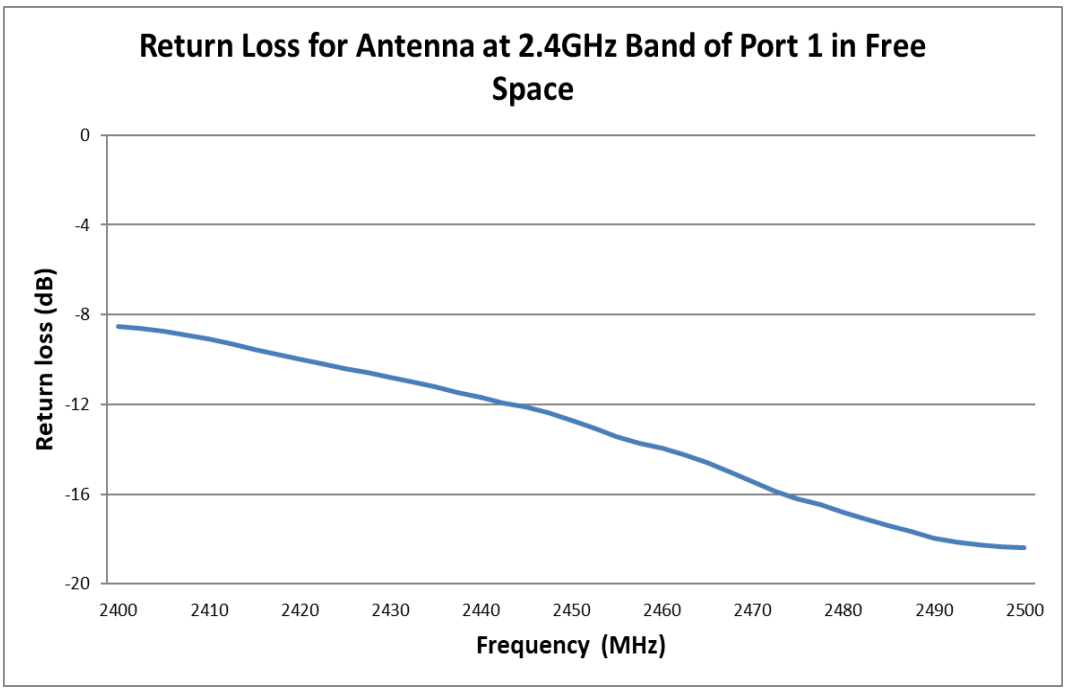

FIGURE 4.3.1 RETURN LOSS OF ANTENNA AT 2.4GHZ BAND OF PORT1 IN FREE SPACE

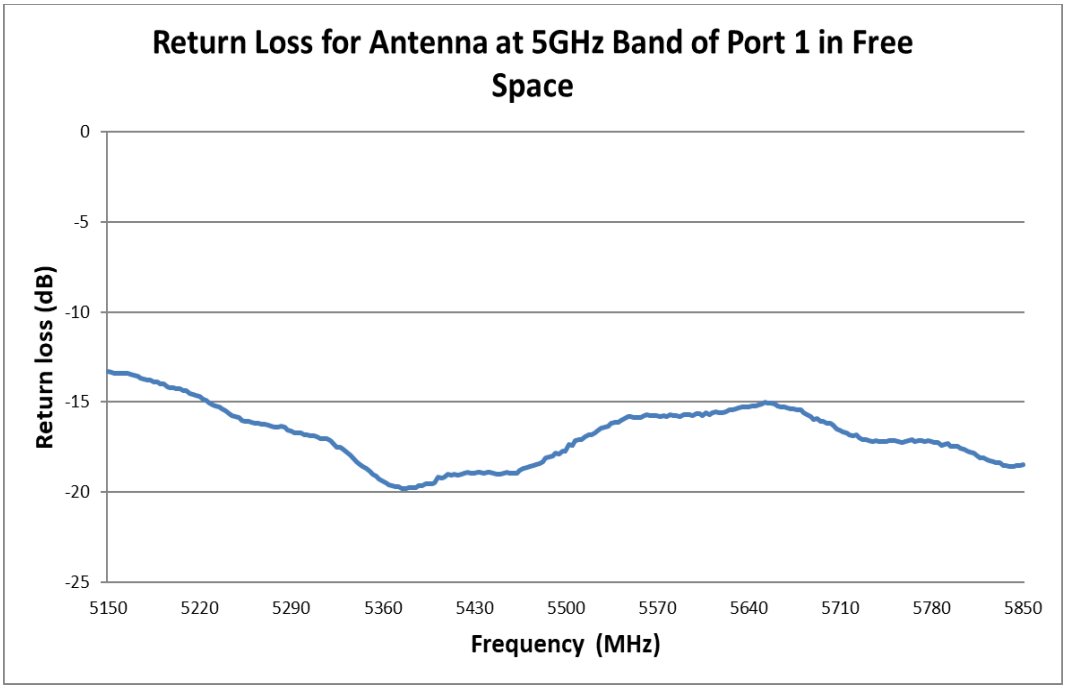

FIGURE 4.3.2 RETURN LOSS OF ANTENNA AT 5GHZ BAND OF PORT1 IN FREE SPACE

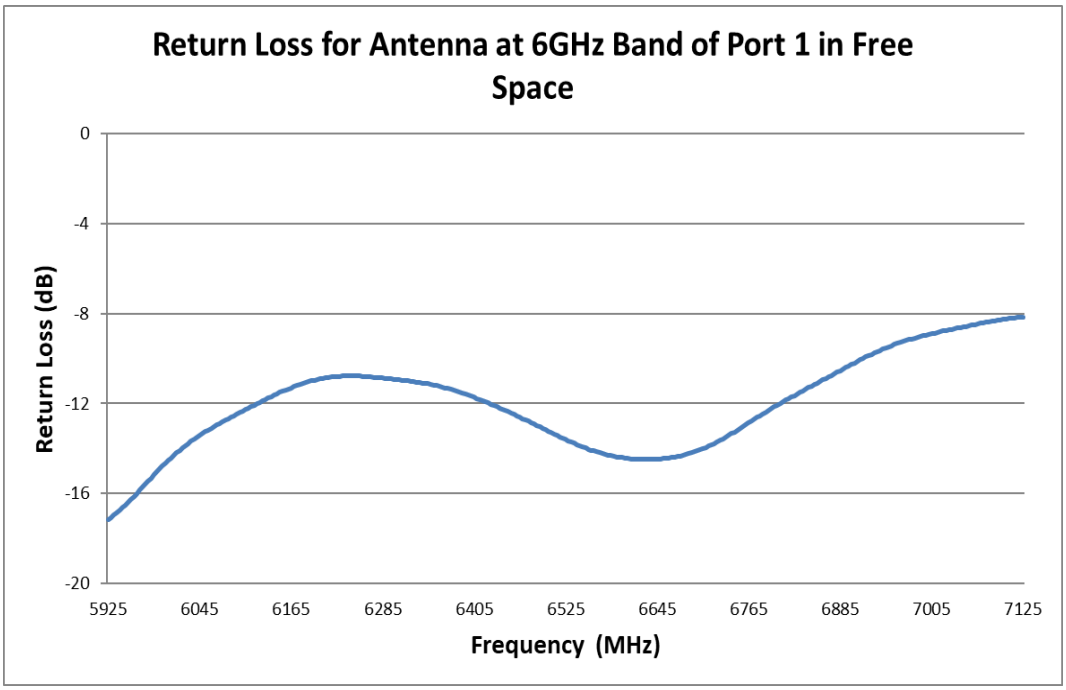

FIGURE 4.3.3 RETURN LOSS OF ANTENNA AT 6GHZ BAND OF PORT1 IN FREE SPACE

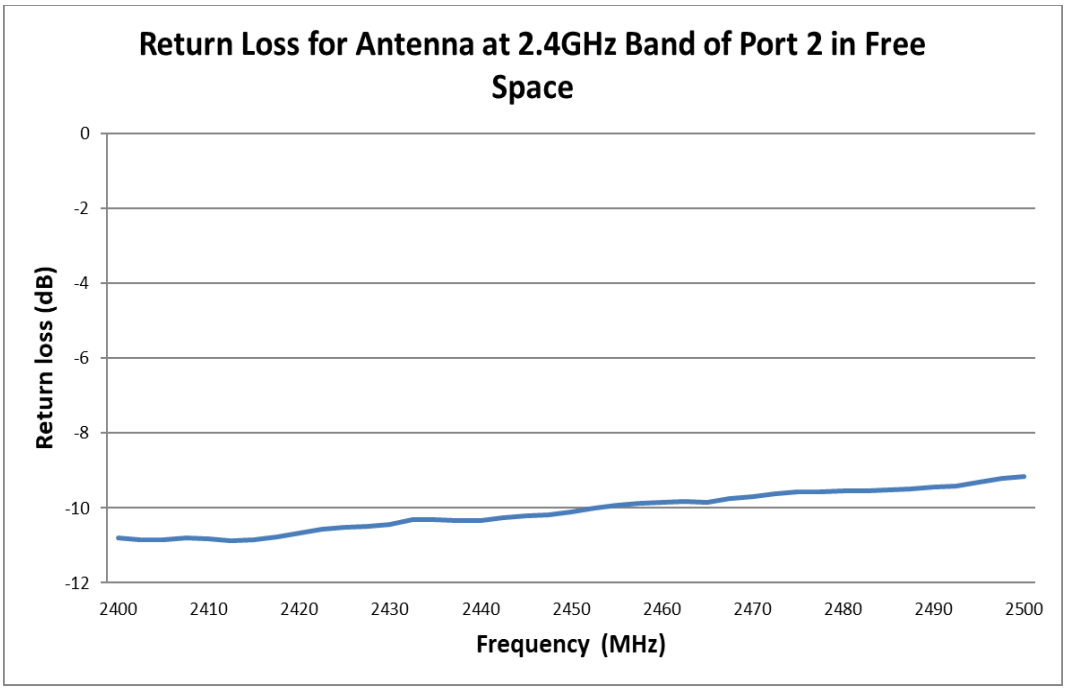

FIGURE 4.3.4 RETURN LOSS OF ANTENNA AT 2.4GHZ BAND OF PORT 2 IN FREE SPACE

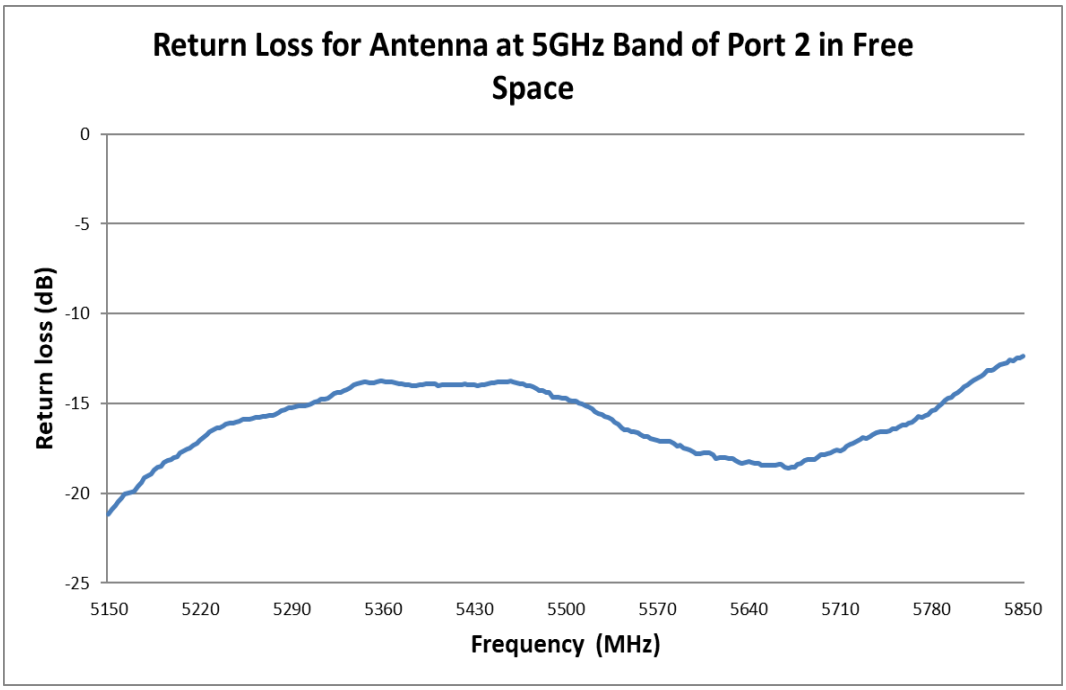

FIGURE 4.3.5 RETURN LOSS OF ANTENNA AT 5GHZ BAND OF PORT 2 IN FREE SPACE

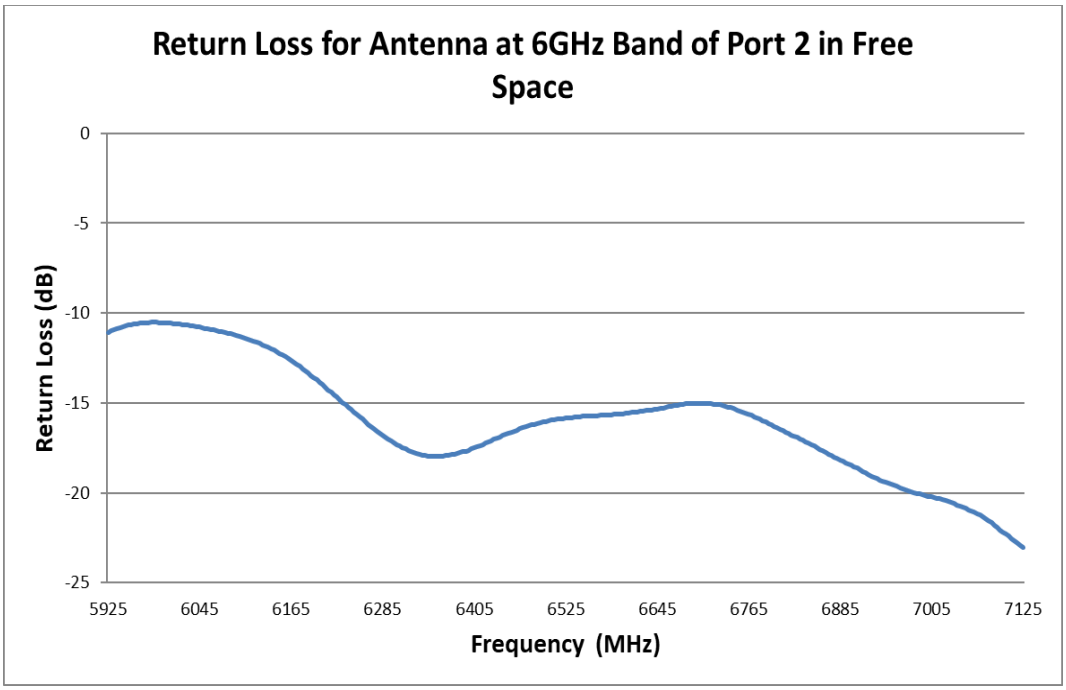

FIGURE 4.3.6 RETURN LOSS OF ANTENNA AT 6GHZ BAND OF PORT 2 IN FREE SPACE

4.4 EFFICIENCY PLOT

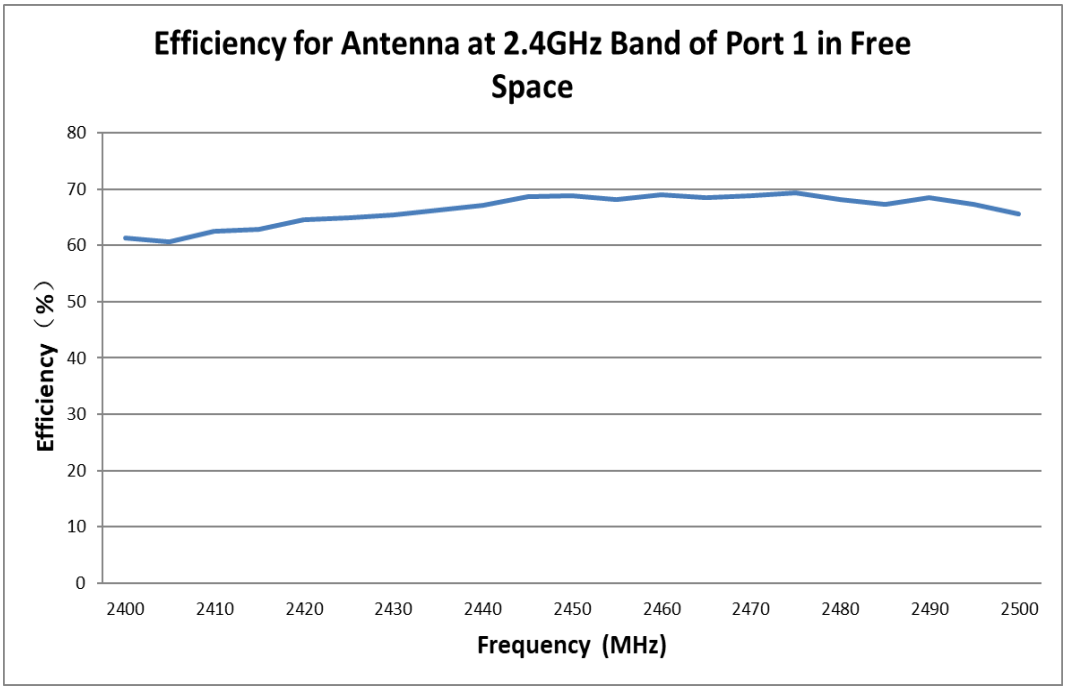

FIGURE 4.4.1 EFFICIENCY OF ANTENNA AT 2.4GHZ BAND OF PORT 1 IN FREE SPACE

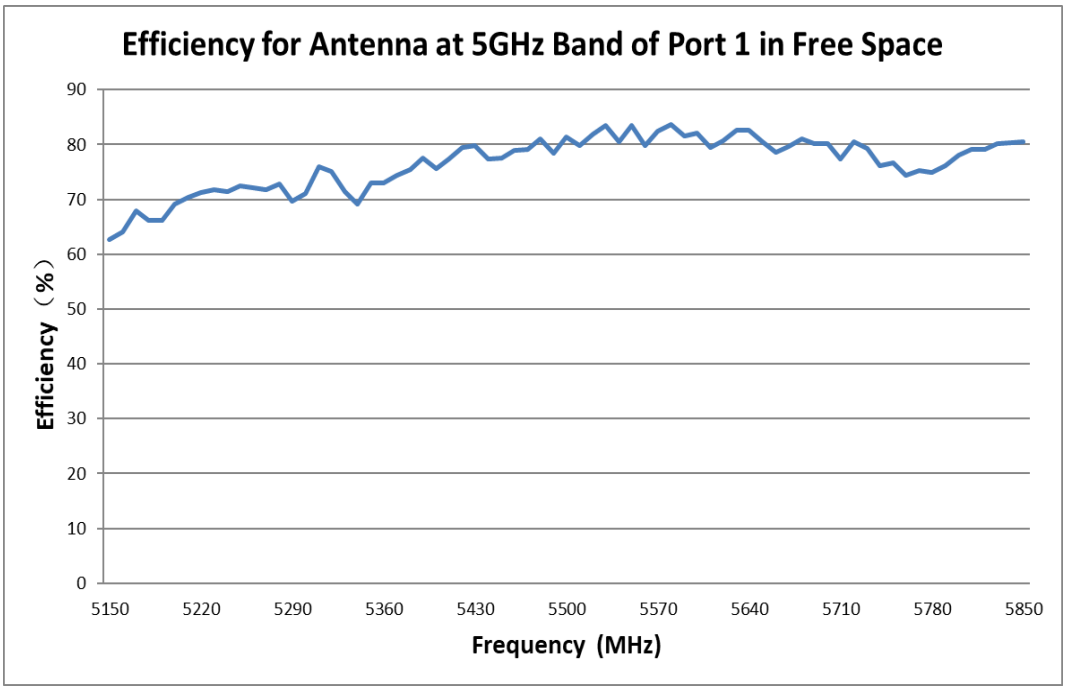

FIGURE 4.4.2 EFFICIENCY OF ANTENNA AT 5GHZ BAND OF PORT 1 IN FREE SPACE

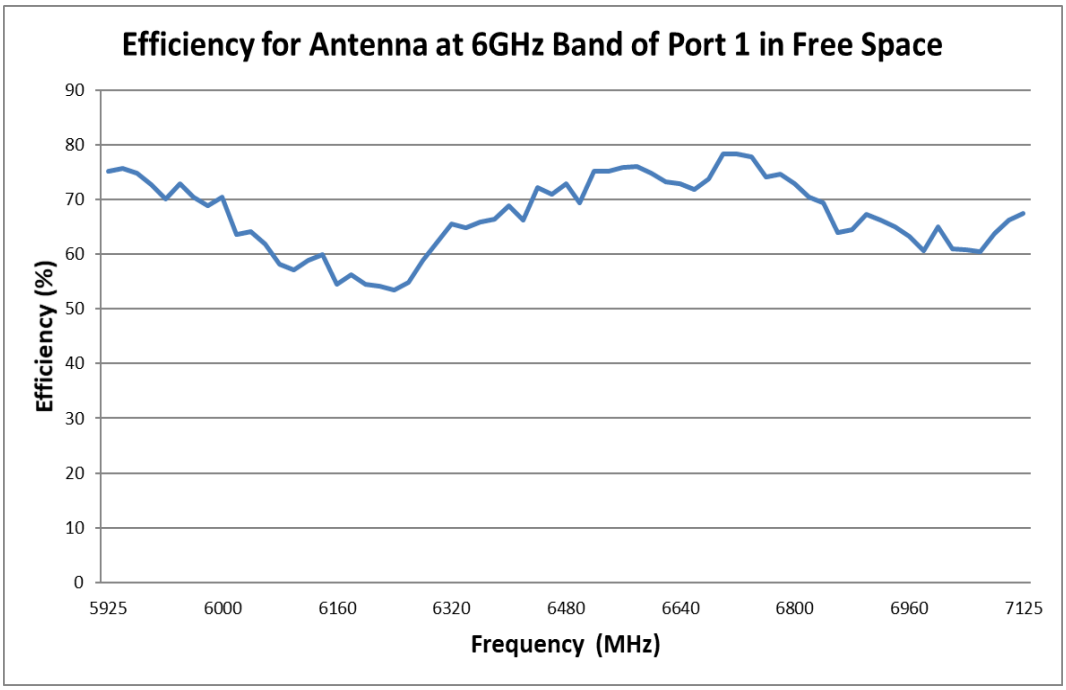

FIGURE 4.4.3 EFFICIENCY OF ANTENNA AT 6GHZ BAND OF PORT 1 IN FREE SPACE

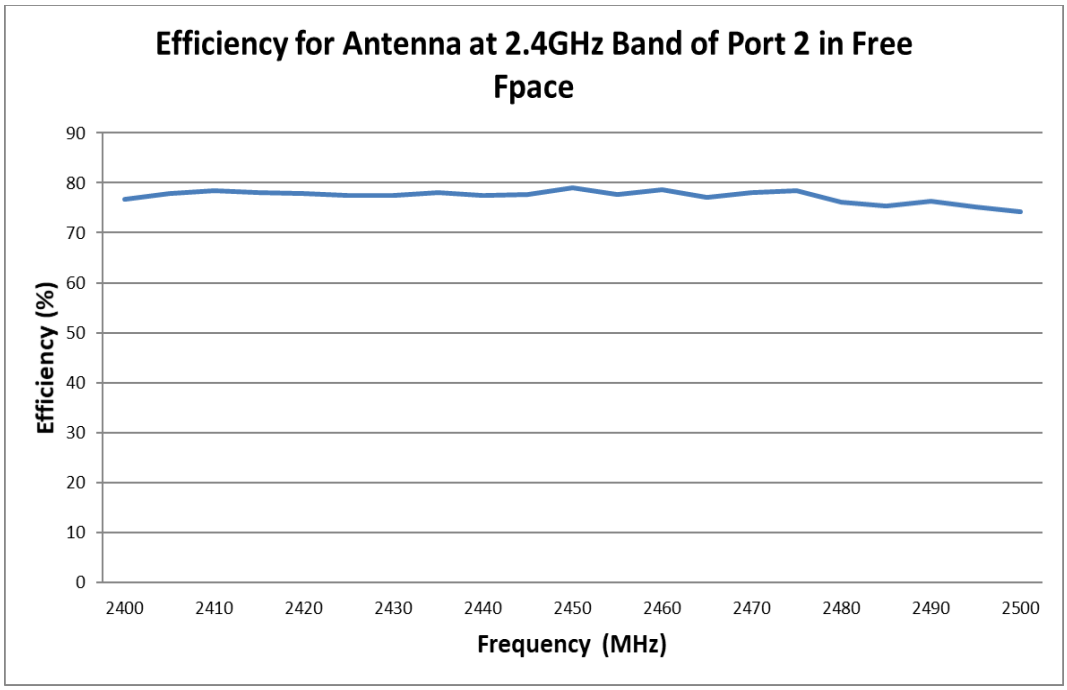

FIGURE 4.4.4 EFFICIENCY OF ANTENNA AT 2.4GHZ BAND OF PORT 2 IN FREE SPACE

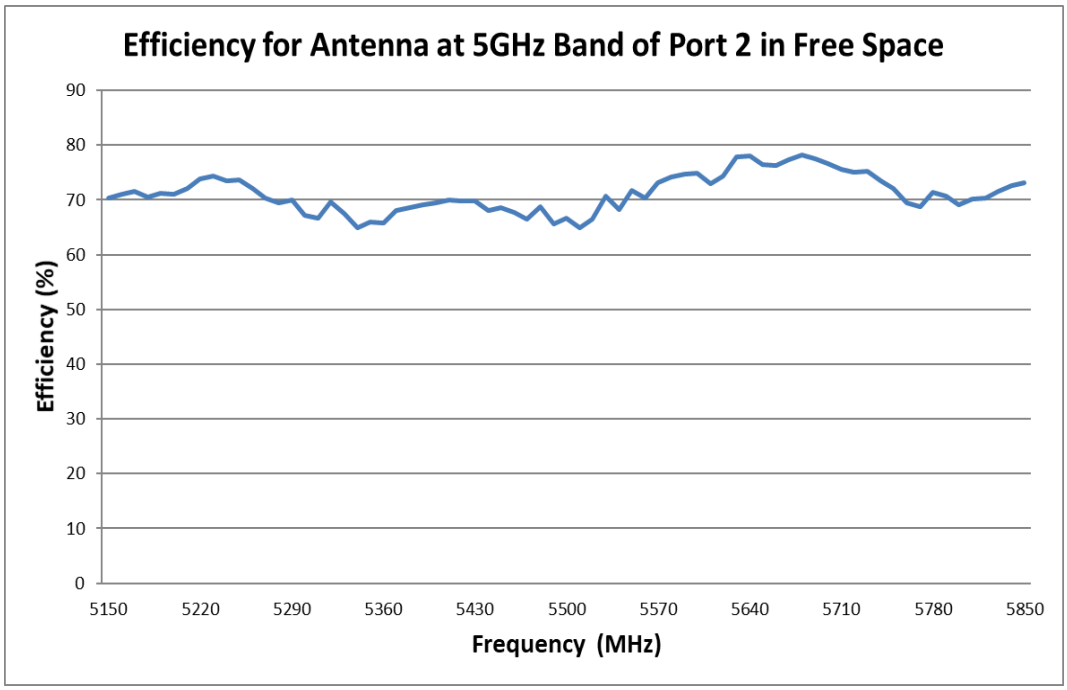

FIGURE 4.4.5 EFFICIENCY OF ANTENNA AT 5GHZ BAND OF PORT 2 IN FREE SPACE

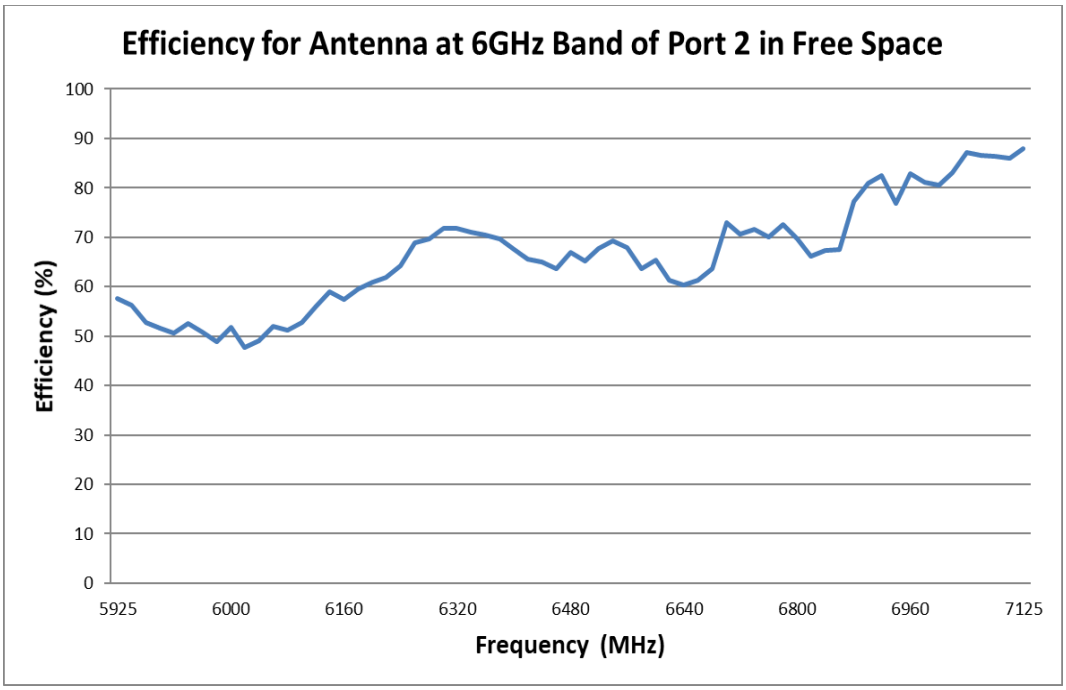

FIGURE 4.4.6 EFFICIENCY OF ANTENNA AT 6GHZ BAND OF PORT 2 IN FREE SPACE

4.5 2D RADIATION PATTERN

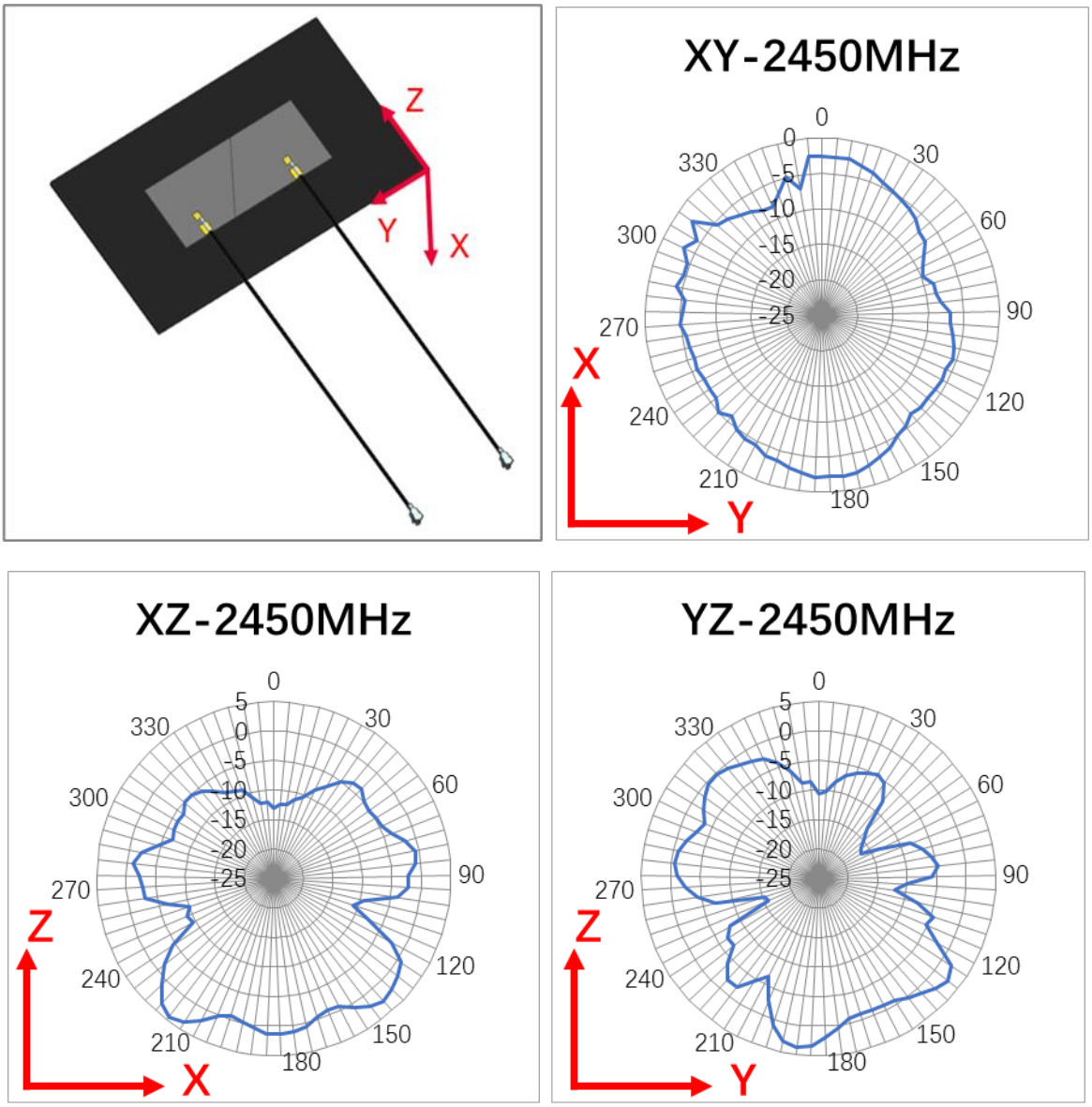

FIGURE 4.5.1 2D RADIATION PATTERN OF ANTENNA AT 2450MHZ BANDOF PORT 1 IN FREE SPACE

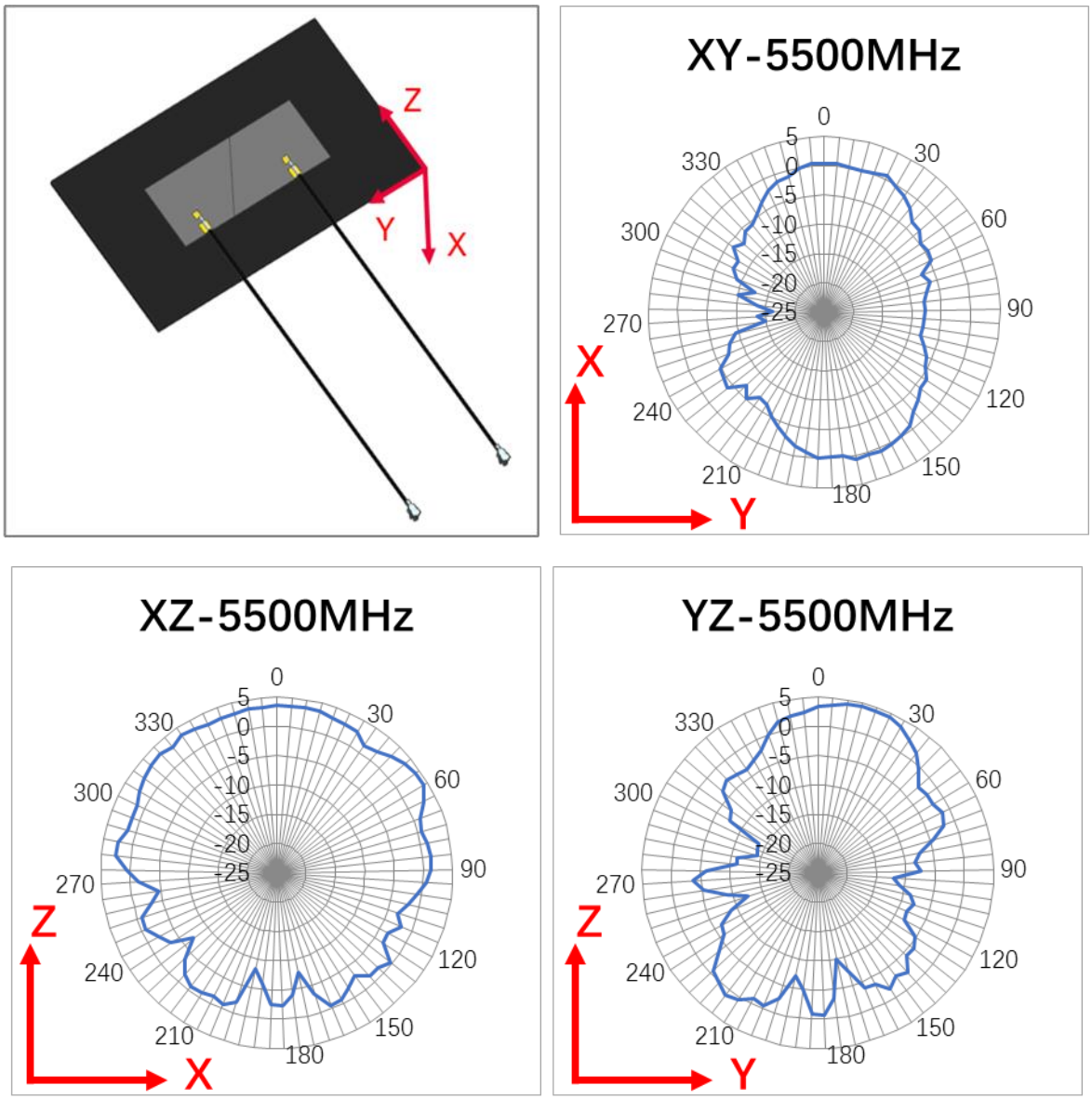

FIGURE 4.5.2 2D RADIATION PATTERN OF ANTENNA AT 5500MHZ BAND OF PORT 1 IN FREE SPACE

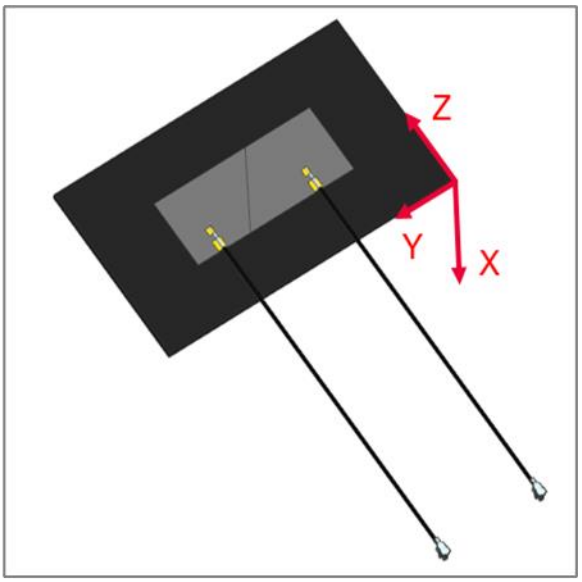

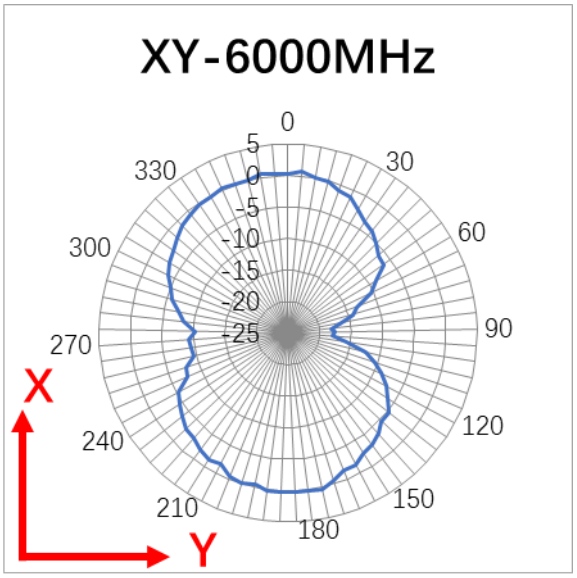

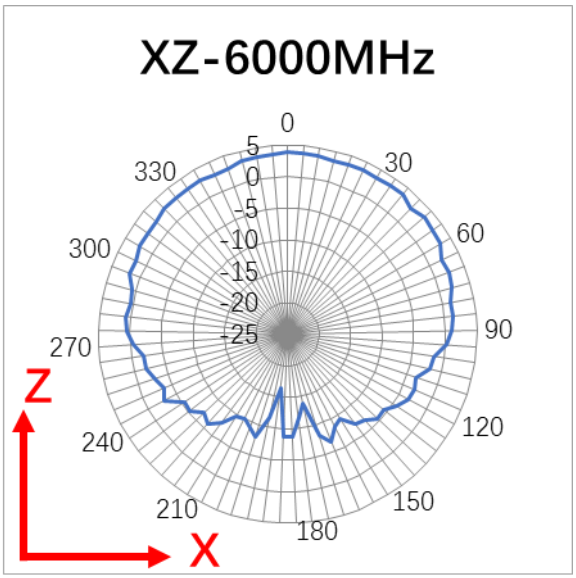

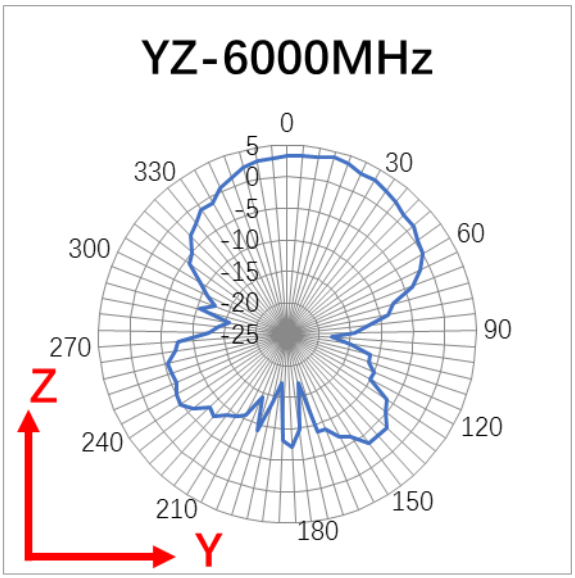

FIGURE 4.5.3 2D RADIATION PATTERN OF ANTENNA AT 6000MHZ BAND OF PORT 1 IN FREE SPACE

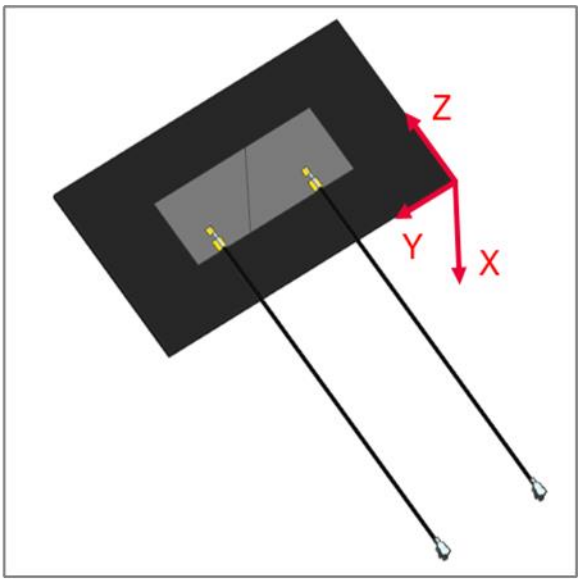

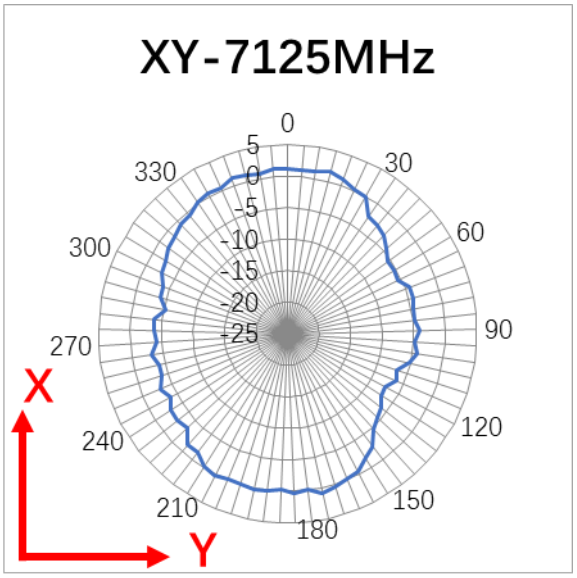

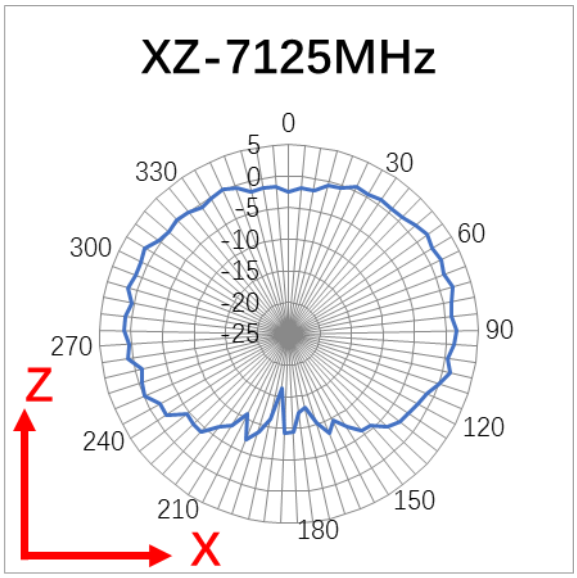

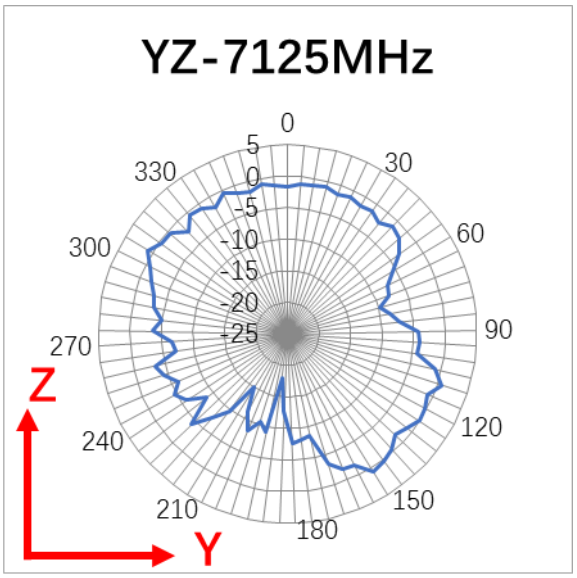

FIGURE 4.5.4 2D RADIATION PATTERN OF ANTENNA AT 7125MHZ BAND OF PORT 1 IN FREE SPACE

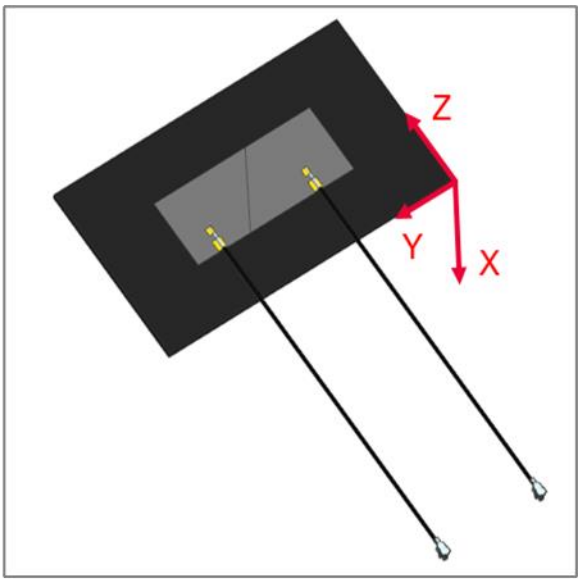

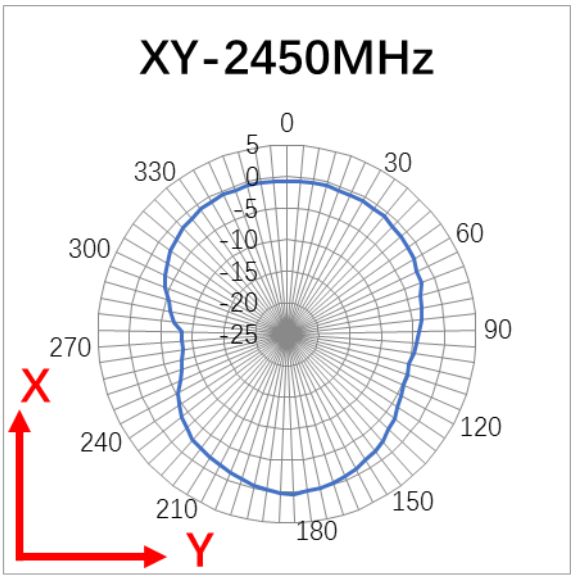

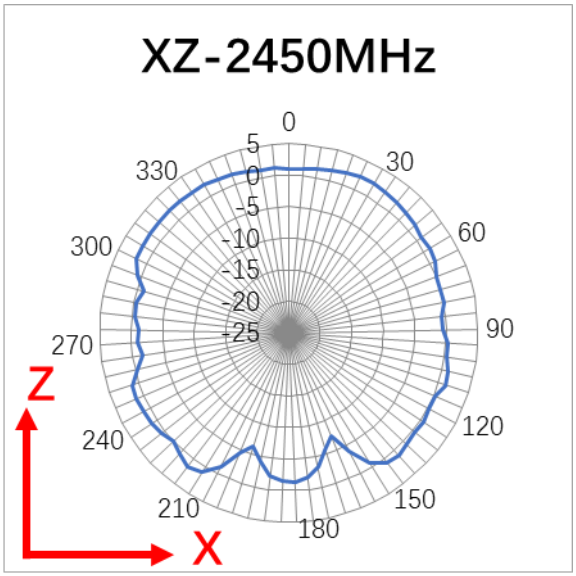

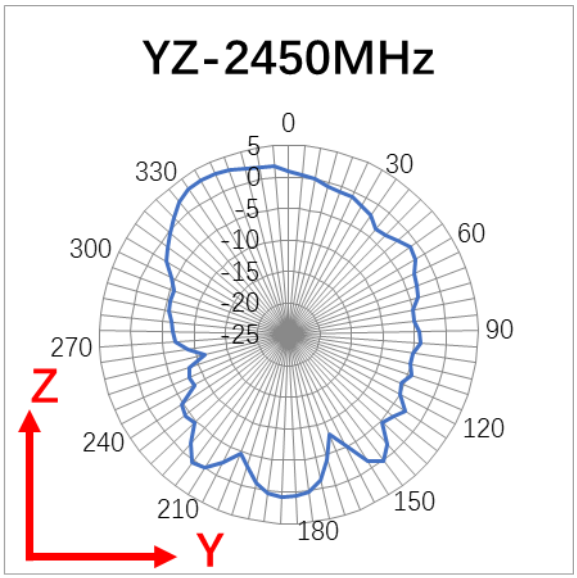

FIGURE 4.5.5 2D RADIATION PATTERN OF ANTENNA AT 2450MHZ BAND OF PORT 2 IN FREE SPACE

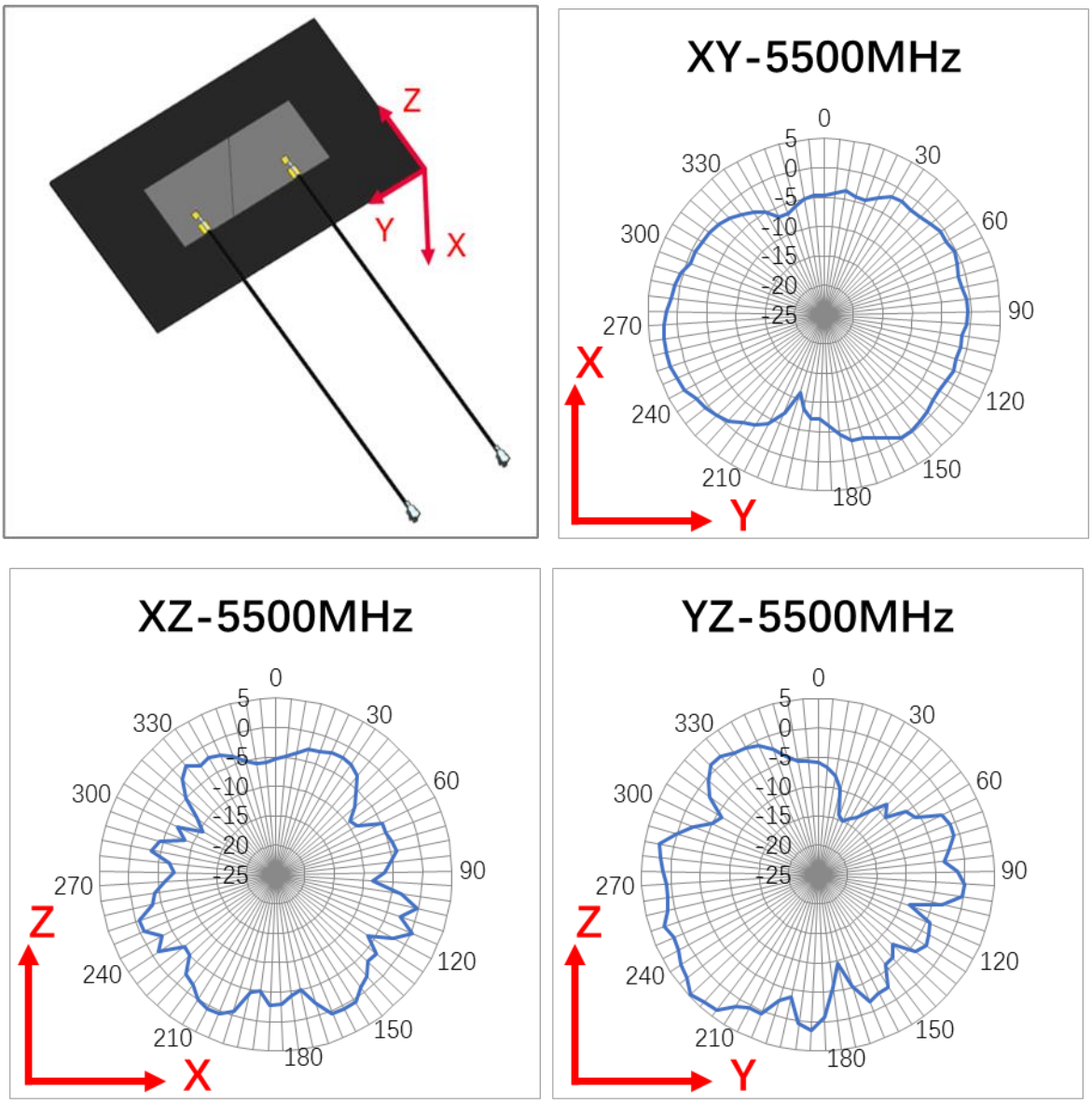

FIGURE 4.5.6 2D RADIATION PATTERN OF ANTENNA AT 5500MHZ BAND OF PORT 2 IN FREE SPACE

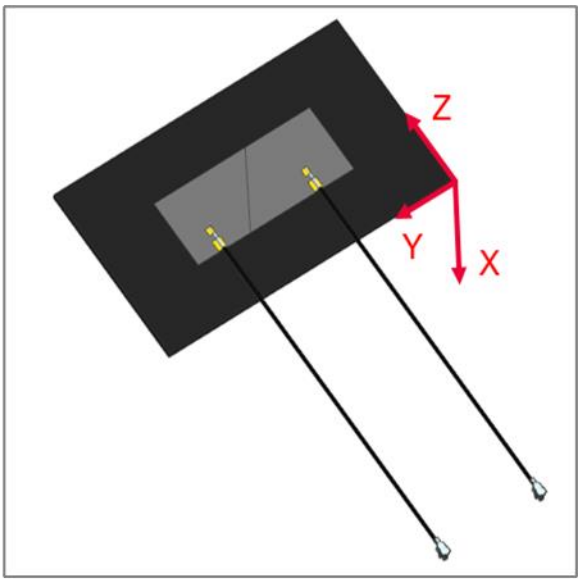

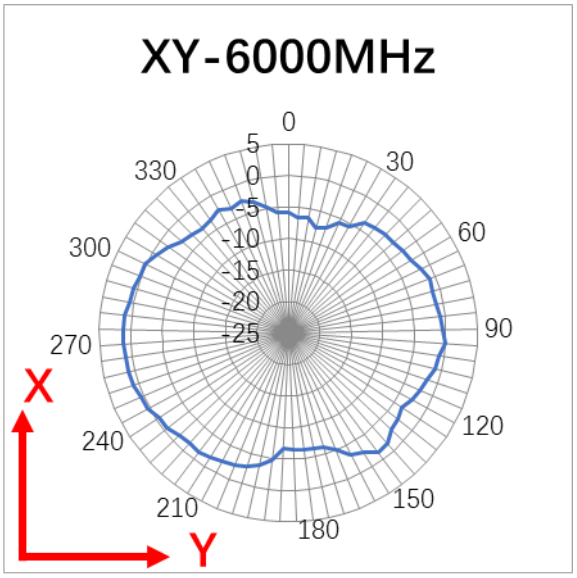

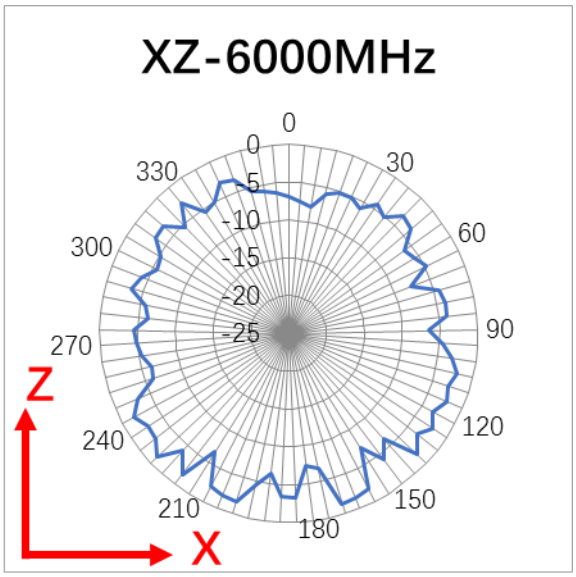

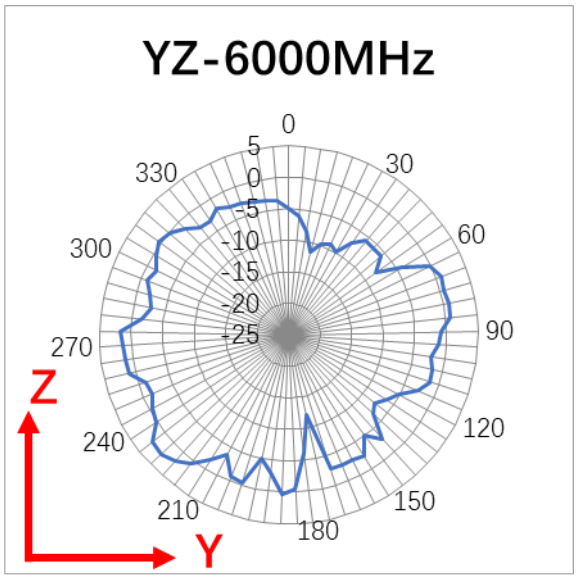

FIGURE 4.5.7 2D RADIATION PATTERN OF ANTENNA AT 6000MHZ BAND OF PORT 2 IN FREE SPACE

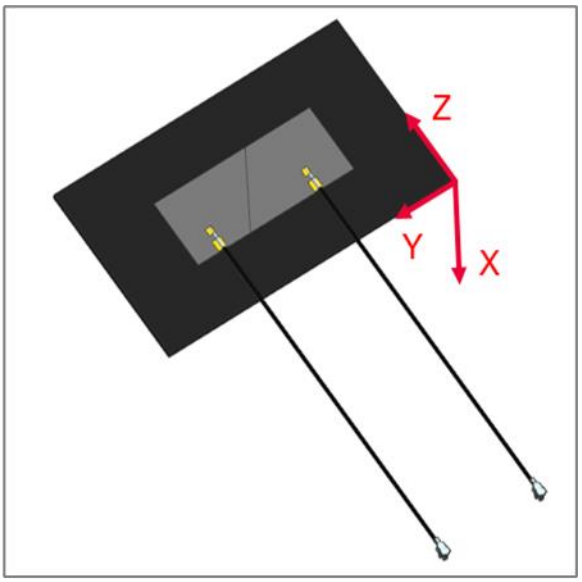

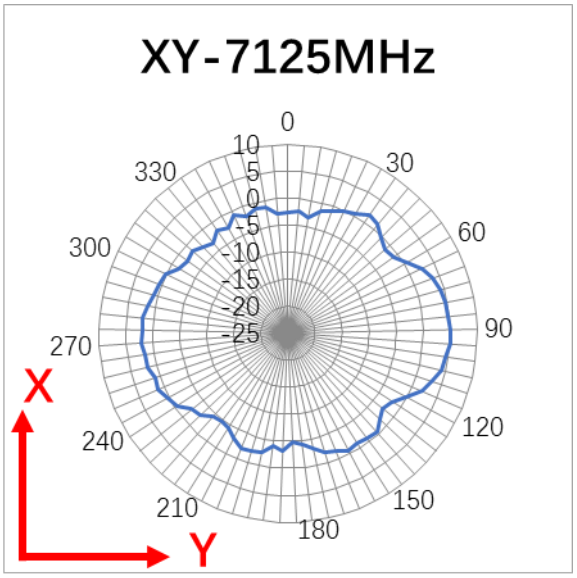

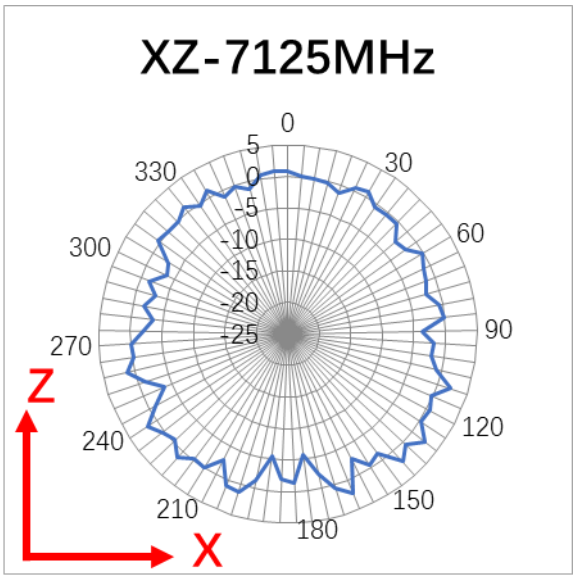

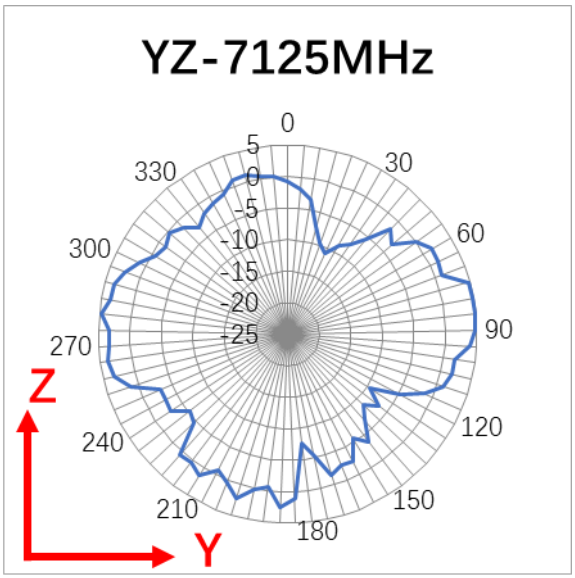

FIGURE 4.5.8 2D RADIATION PATTERN OF ANTENNA AT 7125MHZ BAND OF PORT 2 IN FREE SPACE

4.6 3D RADIATION PATTERN

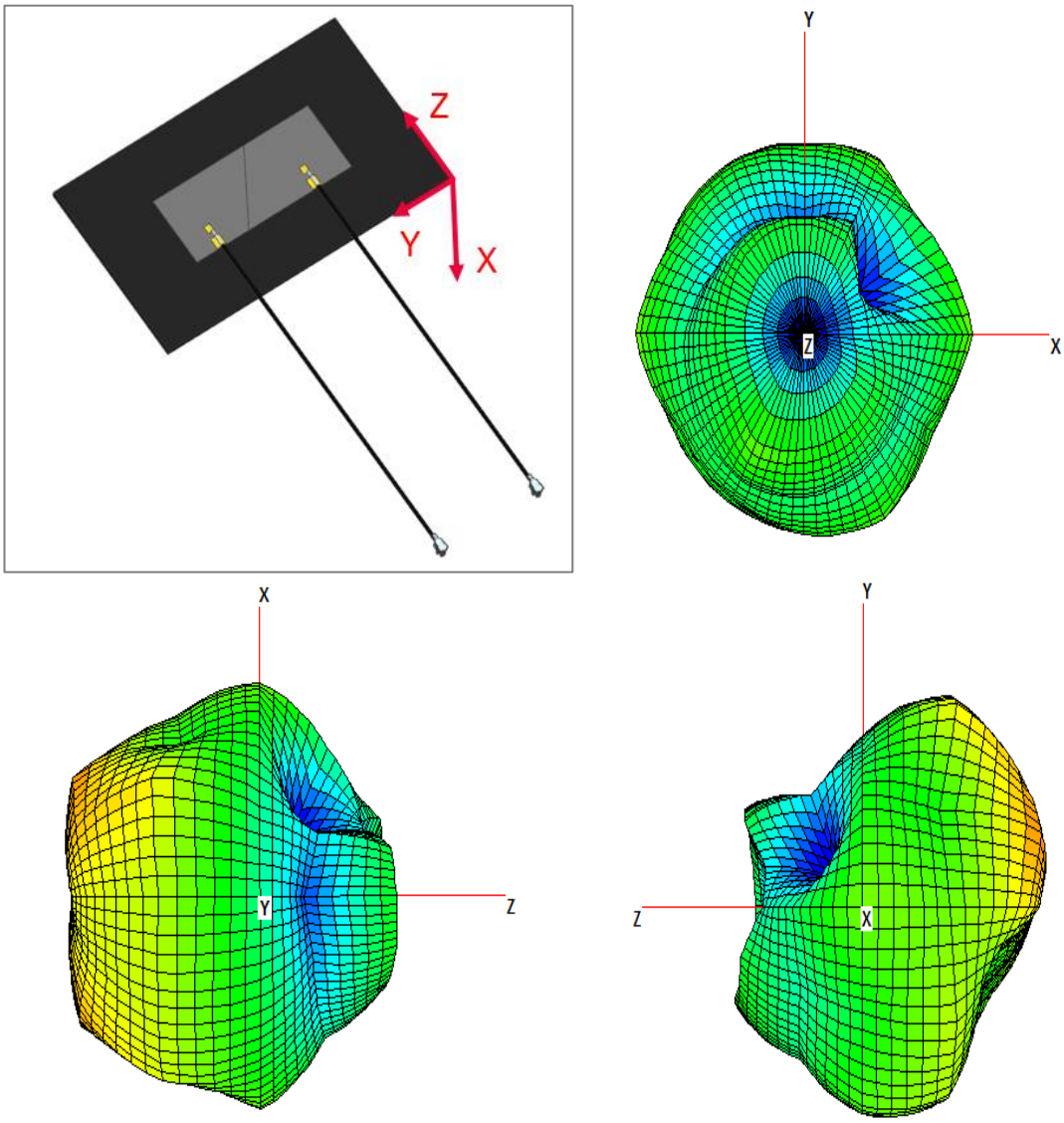

FIGURE 4.6.1 3D RADIATION PATTERN OF ANTENNA AT 2450MHZ BAND OF PORT 1 IN FREE SPACE

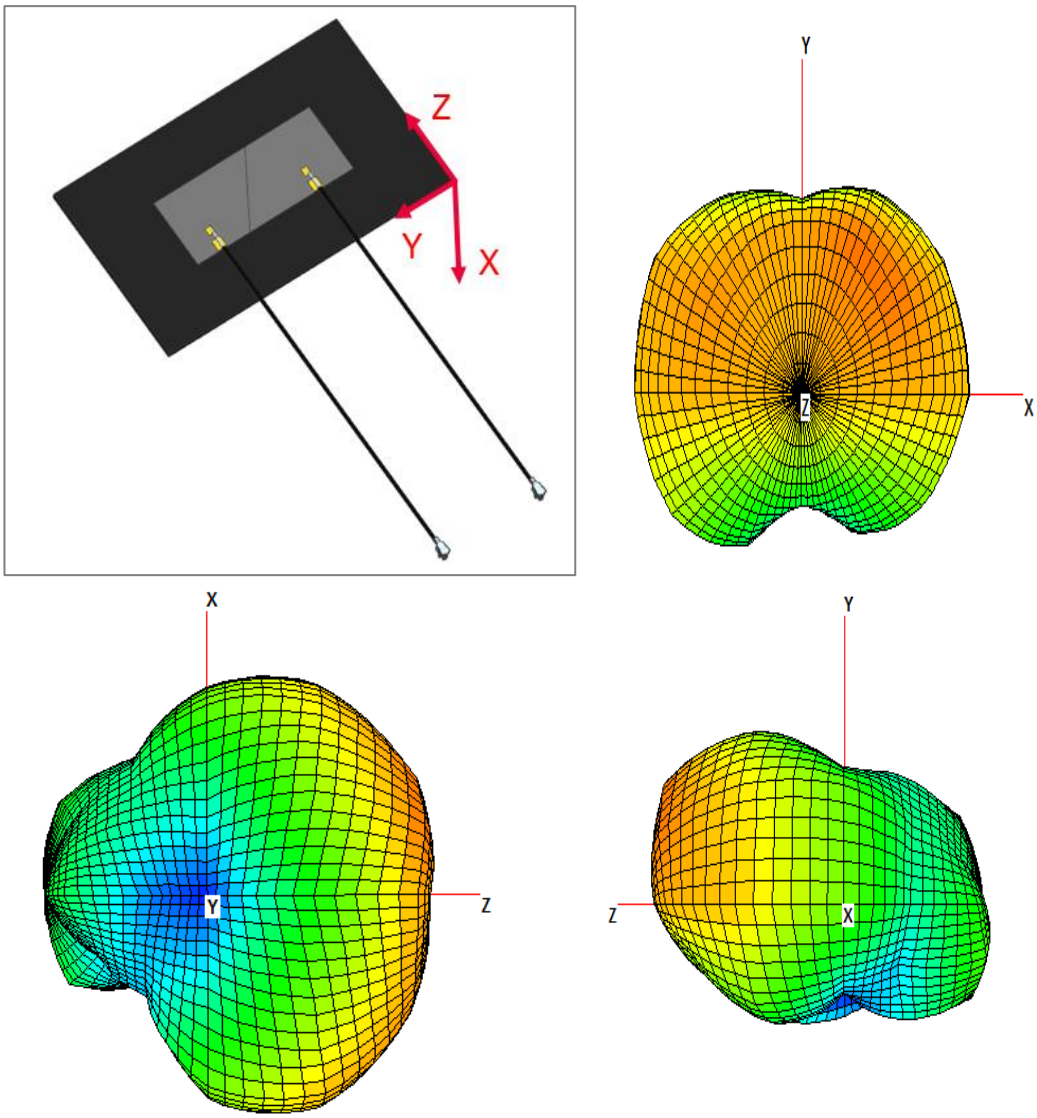

FIGURE 4.6.2 3D RADIATION PATTERN OF ANTENNA AT 5500MHZ BAND OF PORT 1 IN FREE SPACE

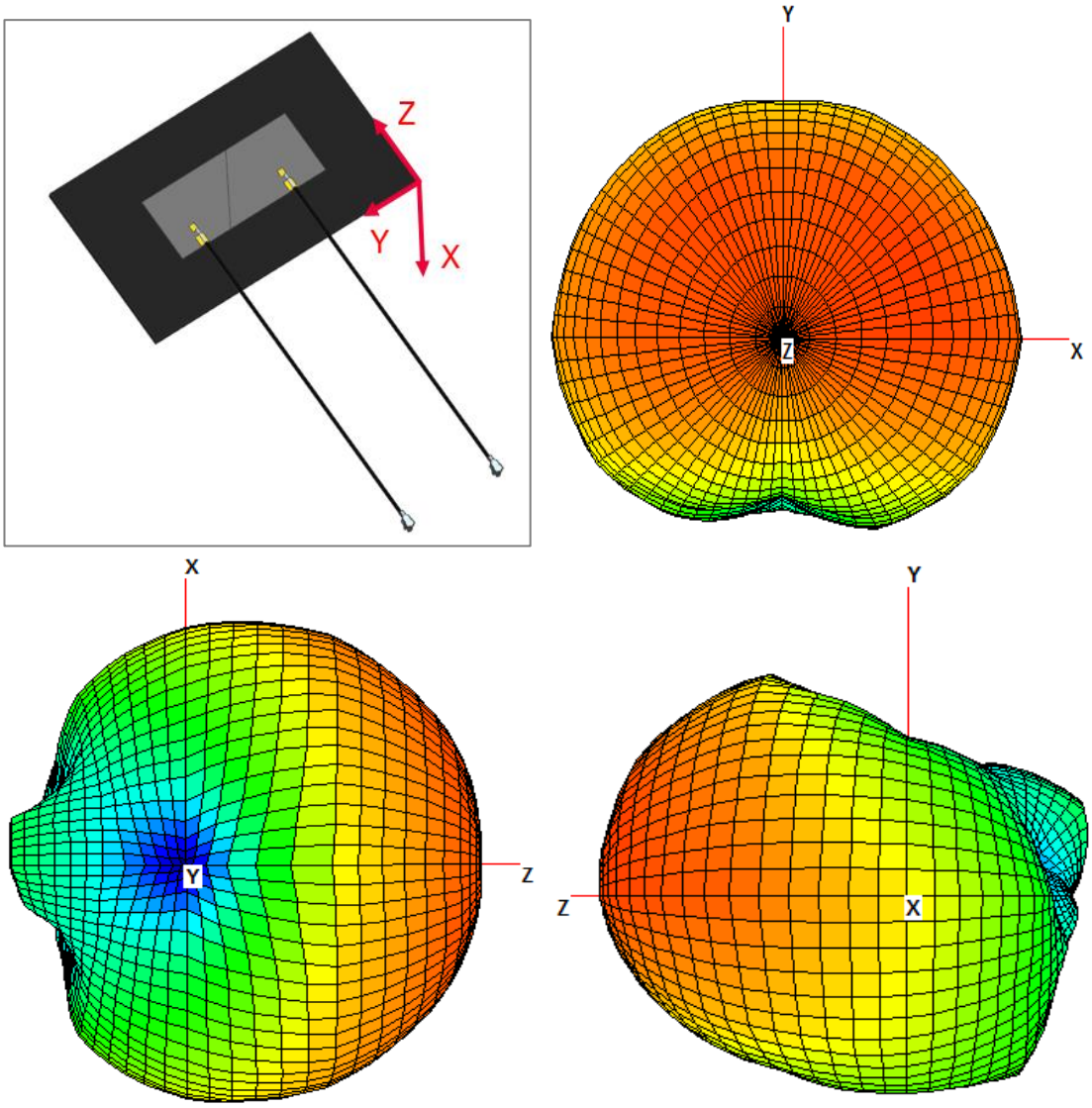

FIGURE 4.6.3 3D RADIATION PATTERN OF ANTENNA AT 6000MHZ BAND OF PORT 1 IN FREE SPACE

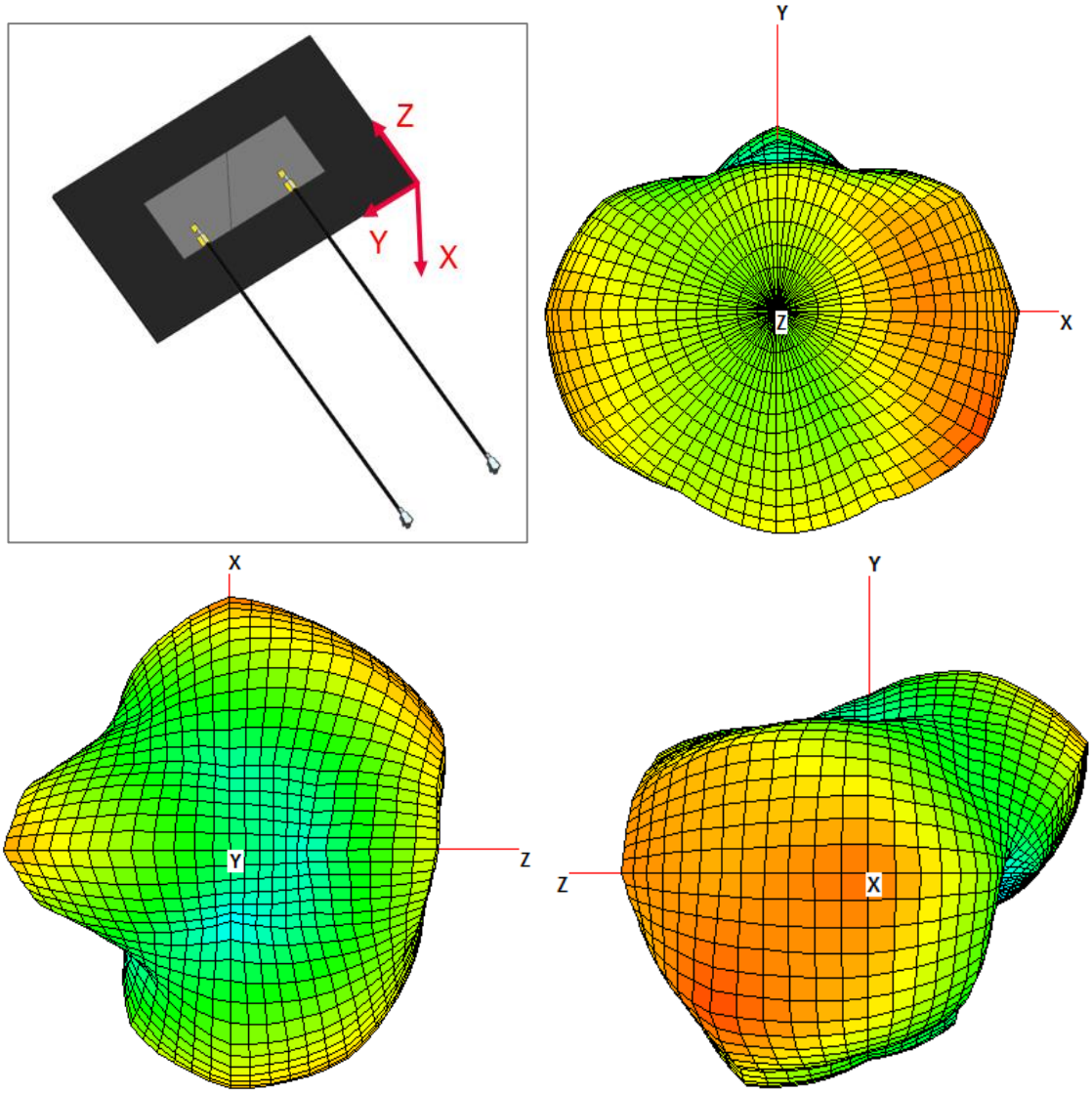

FIGURE 4.6.4 3D RADIATION PATTERN OF ANTENNA AT 7125MHZ BAND OF PORT 1 IN FREE SPACE

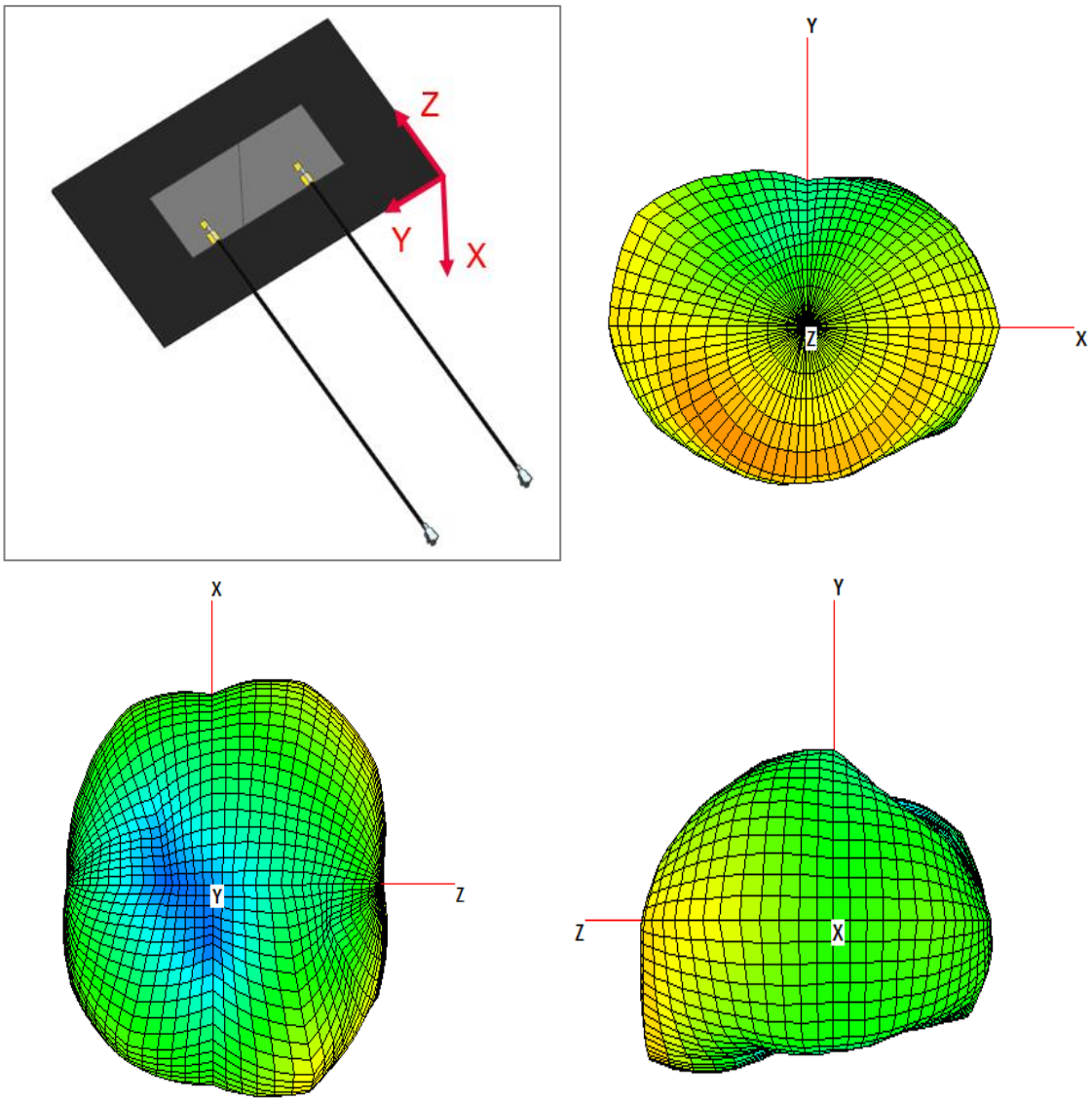

FIGURE 4.6.5 3D RADIATION PATTERN OF ANTENNA AT 2450MHZ BAND OF PORT 2 IN FREE SPACE

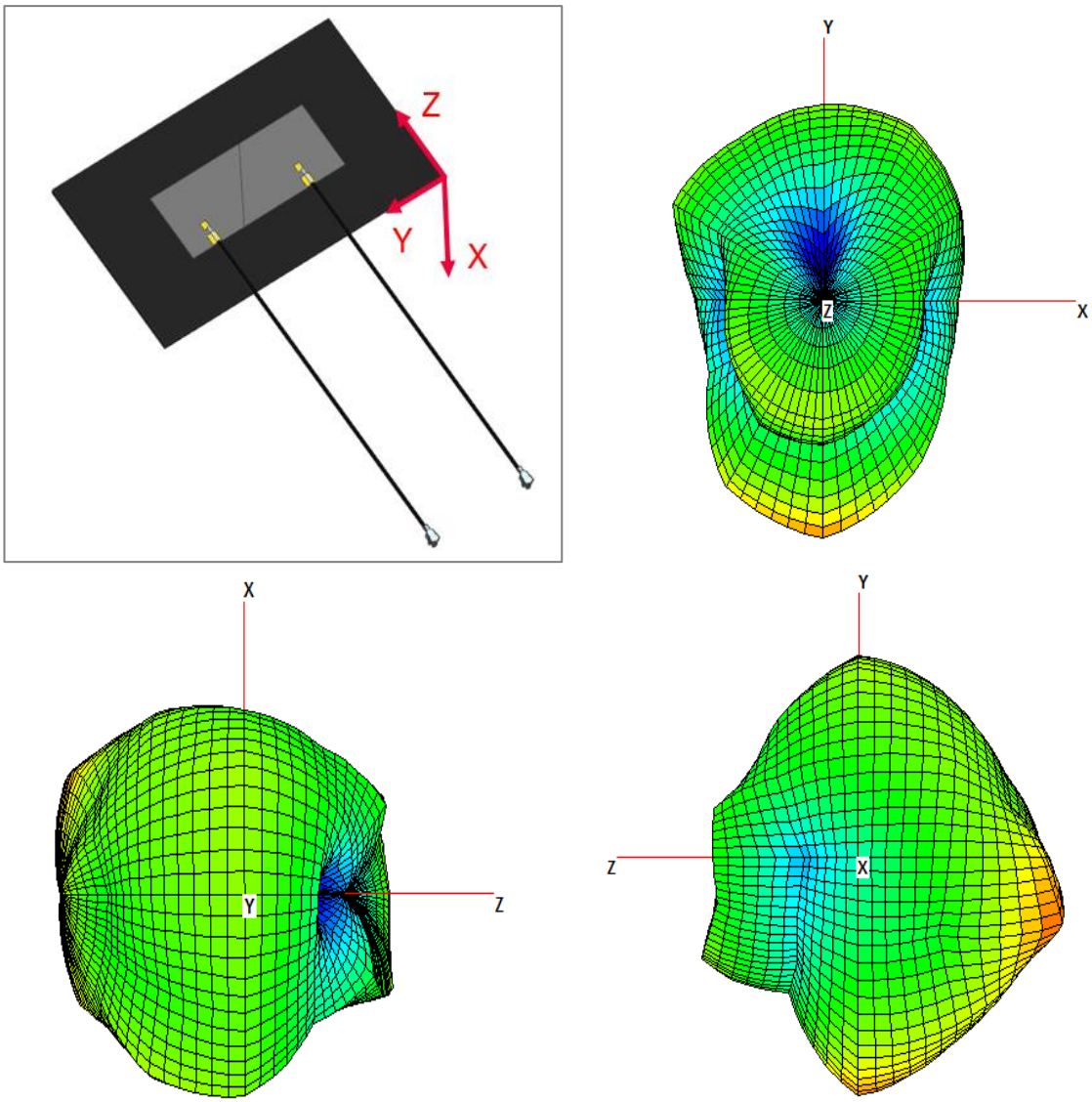

FIGURE 4.6.6 3D RADIATION PATTERN OF ANTENNA AT 5500MHZ BAND OF PORT 2 IN FREE SPACE

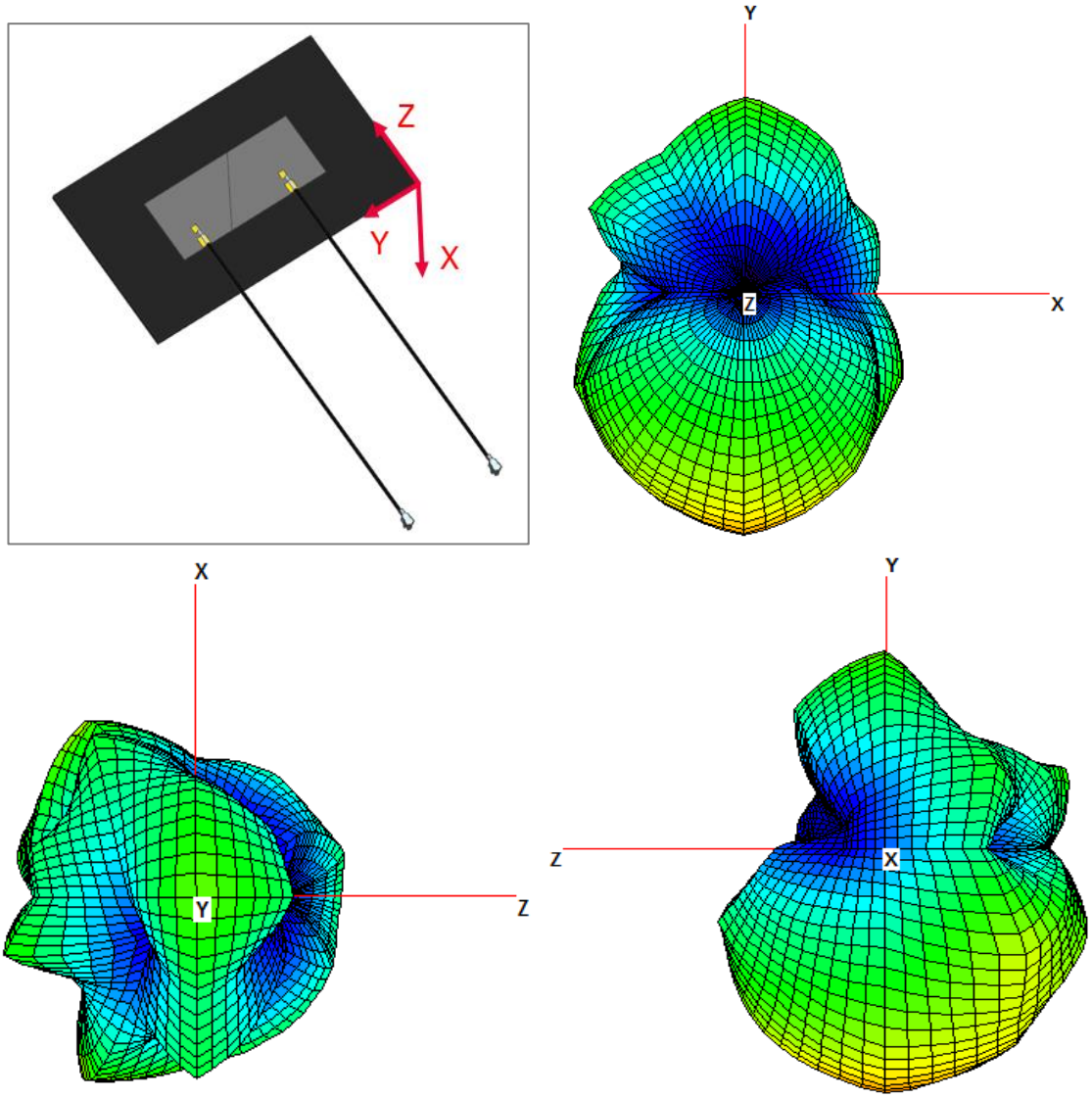

FIGURE 4.6.7 3D RADIATION PATTERN OF ANTENNA AT 6000MHZ BAND OF PORT 2 IN FREE SPACE

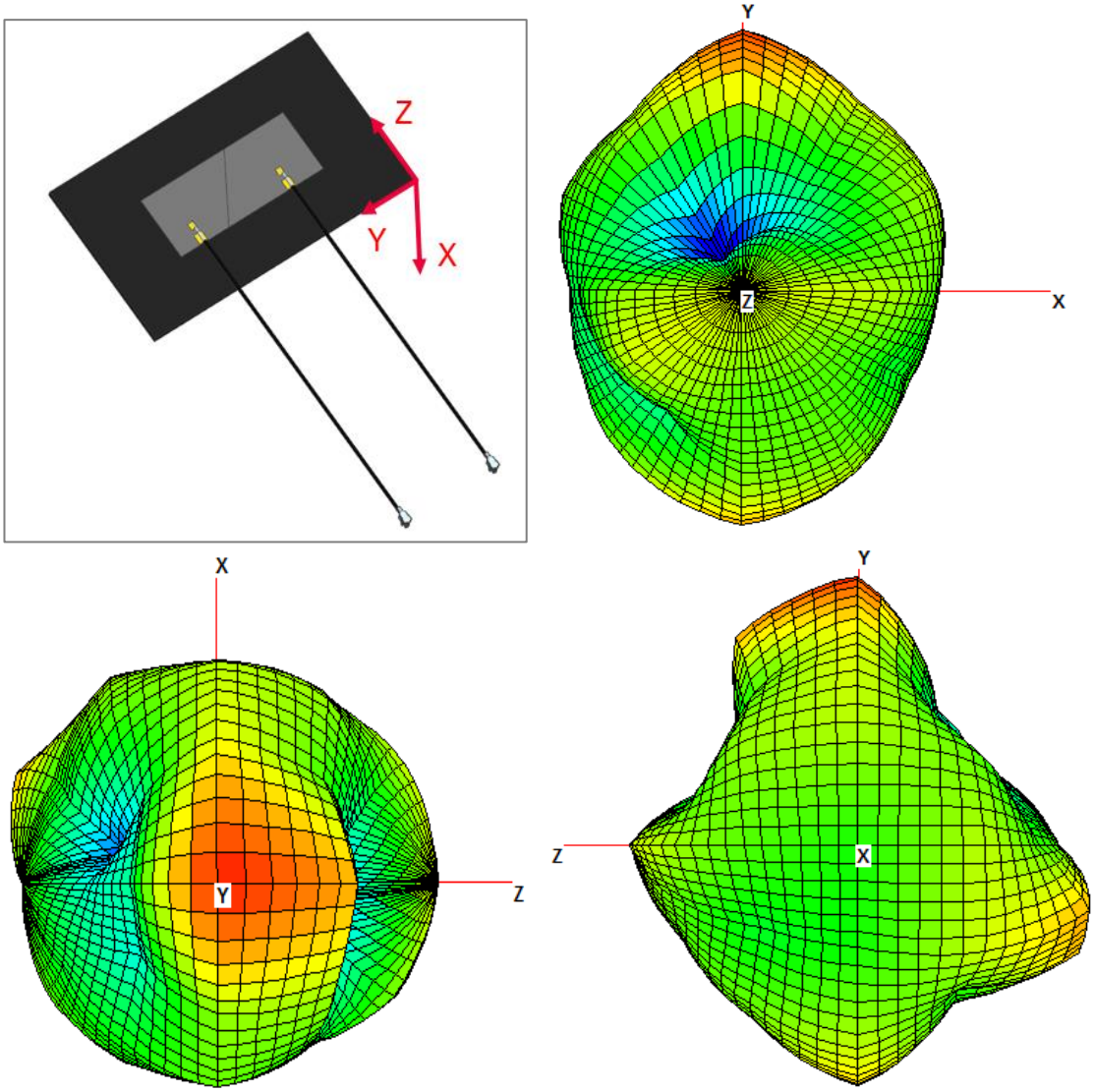

FIGURE 4.6.8 3D RADIATION PATTERN OF ANTENNA AT 7125MHZ BAND OF PORT 2 IN FREE SPACE

5.0 ASSEMBLY GUIDELINE

The flex antenna comes with an adhesive TESA for assemble onto the plastic wall of the system. The surface should be smooth with Ra<1.6um, and need to clean the surface before sticking this product. The antenna cannot be placed on a metallic surface.

5.1 HOW TO TEAR FLEX RELEASE PAPER

1. Find cut line on flex back side

2. Bend flex slight along cut line

3. Tear release paper

5.2 CABLE BENDING

During the assembly of the antenna in a device, the cable needs to be positioned away from the antenna flex to achieve best performance. The cable must be away from the pattern at least 5mm as shown in figure 5.2.1. If the cable crosses into the antenna flex, the antenna performance will be degraded.

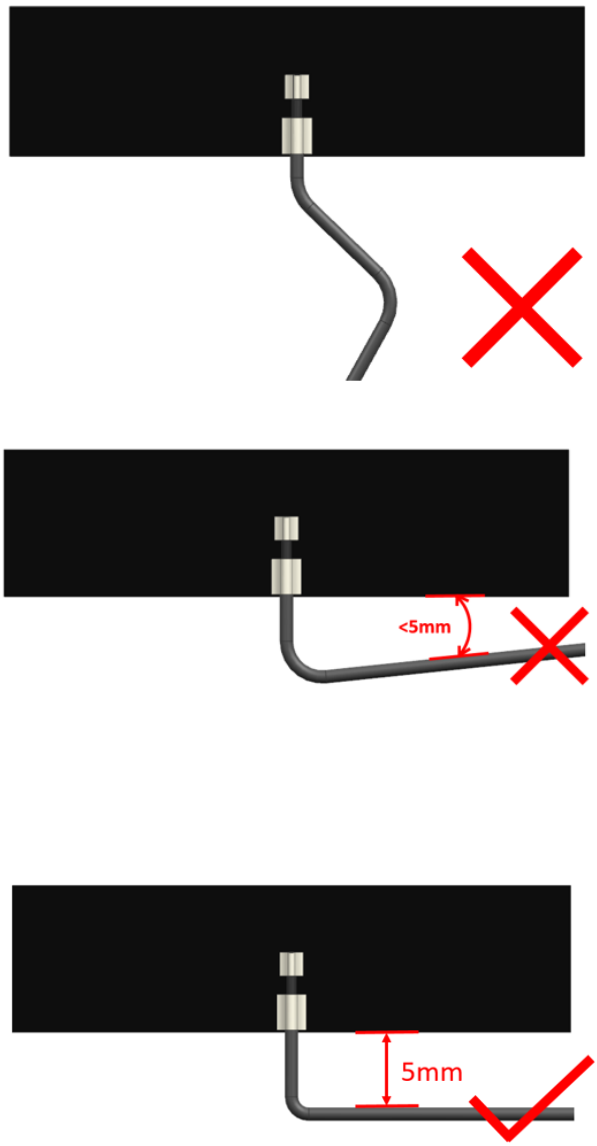

FIGURE 5.2.1 CABLE BENDING

6.0 PERFORMANCE AS A FUNCTION OF IMPLEMENTATION

6.1 ANTENNA RF PERFORMANCE AS A FUNCTION OF DIFFERENT LOCATIONS WITH PARALLEL PLANE GROUND

Four locations with parallel plane ground have been evaluated and these locations are shown in figure 6.1.0. The plane ground size is 90mm*90mm and we move the plane ground to four locations for each test. The antenna performance is better with larger distance between antenna and parallel plane ground at high band. The minimum distance between antenna and plane ground is recommended to be 15mm to achieve acceptable RF performance.

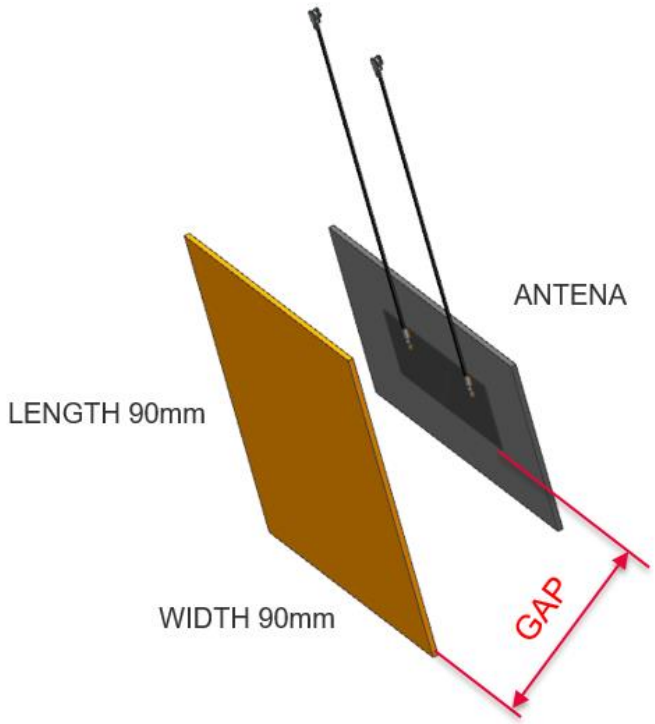

FIGURE 6.1.0 FOUR LOCATIONS WITH PARALLEL PLANE GROUND

Ground Size: 90mm*90mm;
Location 1: Distance between antenna and plane (GAP) ground is about 5mm;
Location 2: Distance between antenna and plane (GAP) ground is about 10mm;
Location 3: Distance between antenna and plane (GAP) ground is about 15mm;
Location 4: Distance between antenna and plane (GAP) ground is about 20mm.

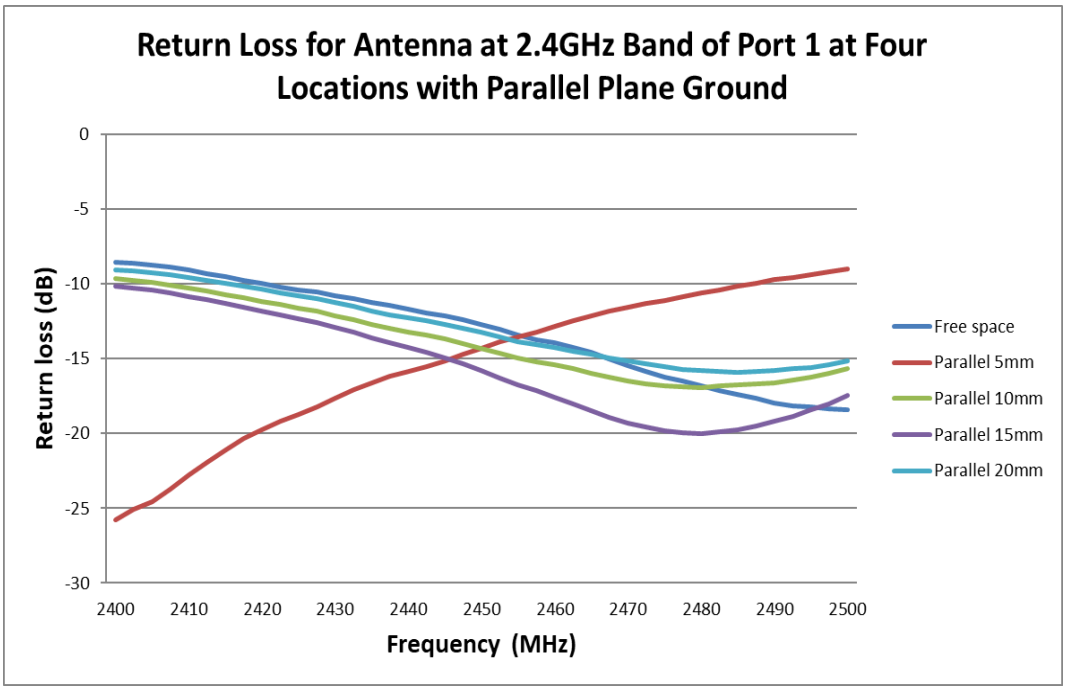

FIGURE 6.1.1 RETURN LOSS OF ANTENNA AT 2.4GHZ BAND OF PORT1 AT FOUR LOCATIONS WITH PARALLEL PLANE GROUND

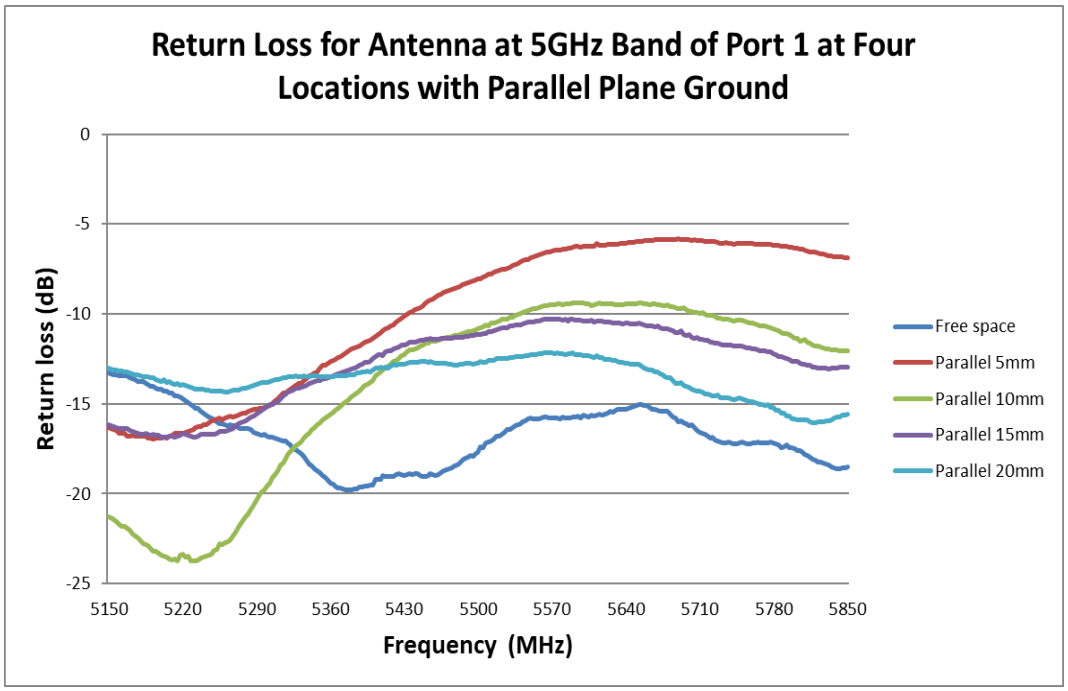

FIGURE 6.1.2 RETURN LOSS OF ANTENNA AT 5GHZ BAND OF PORT1 AT FOUR LOCATIONS WITH PARALLEL PLANE GROUND

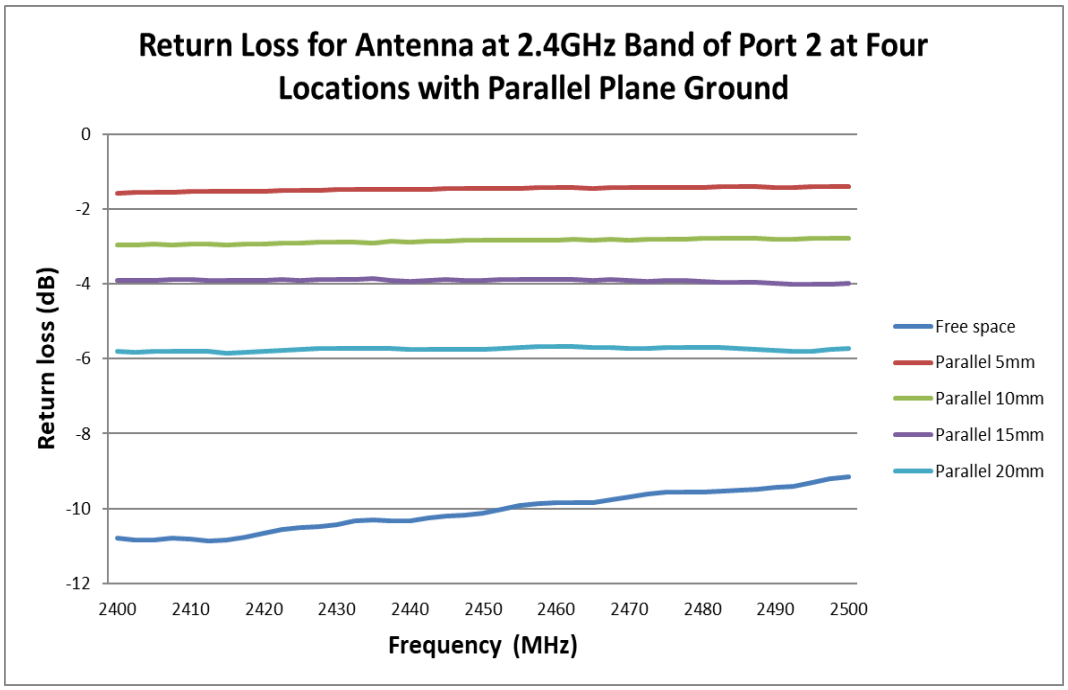

FIGURE 6.1.3 RETURN LOSS OF ANTENNA AT 2.4GHZ BAND OF PORT2 AT FOUR LOCATIONS WITH PARALLEL PLANE GROUND

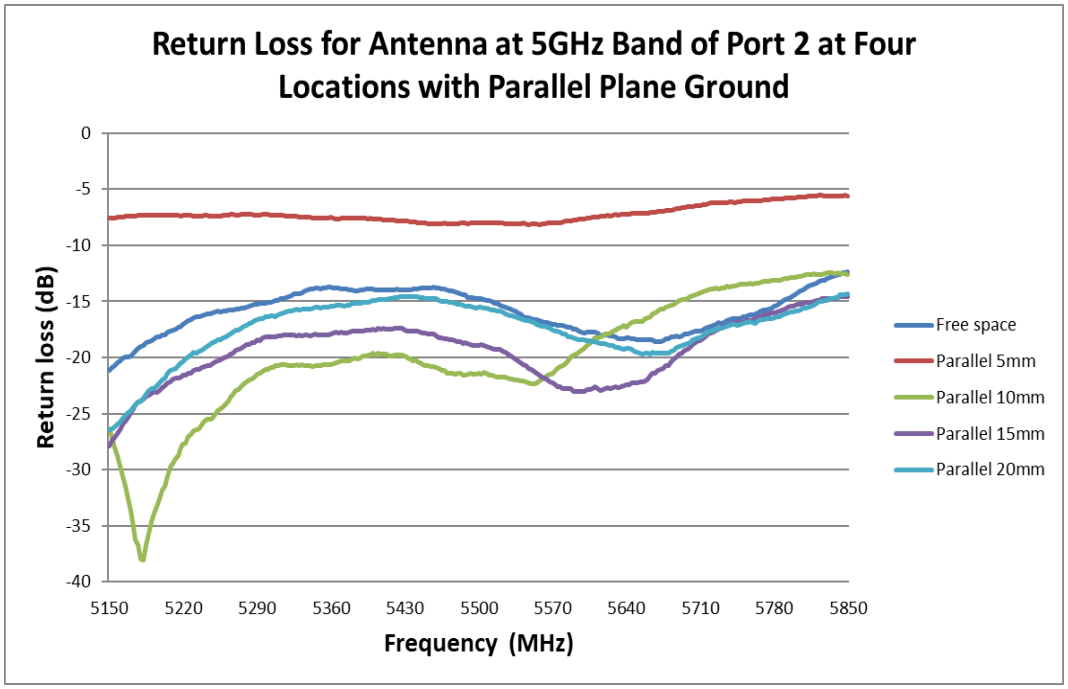

FIGURE 6.1.4 RETURN LOSS OF ANTENNA AT 5GHZ BAND OF PORT2 AT FOUR LOCATIONS WITH PARALLEL PLANE GROUND

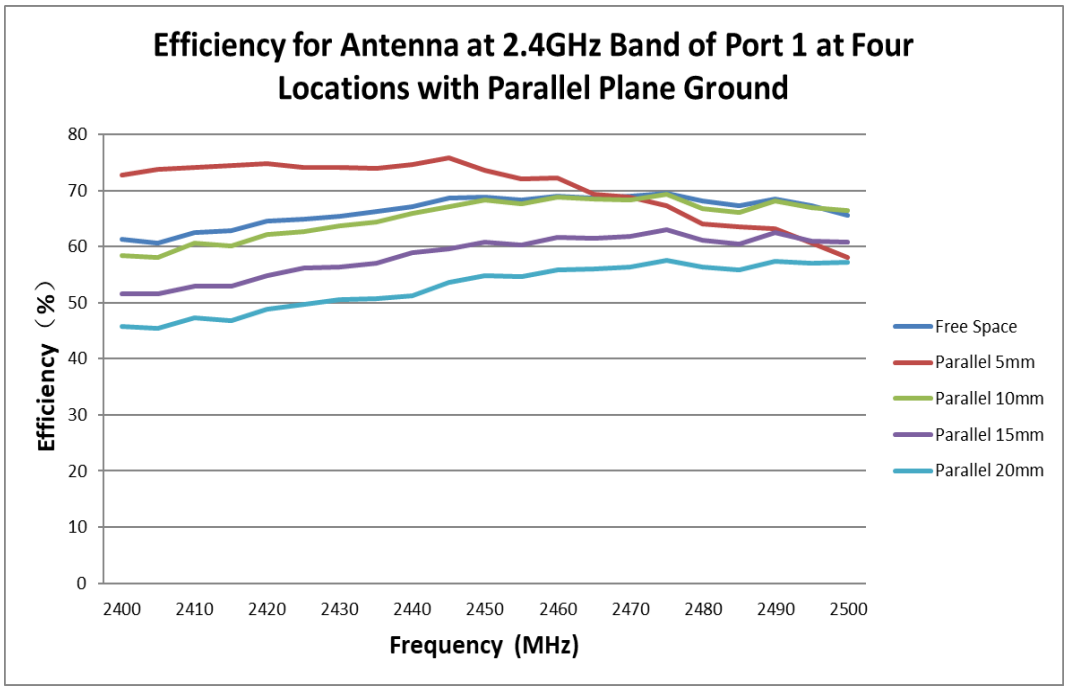

FIGURE 6.1.5 EFFICIENCY OF ANTENNA AT 2.4GHZ BAND OF PORT1 AT FOUR LOCATIONS WITH PARALLEL PLANE GROUND

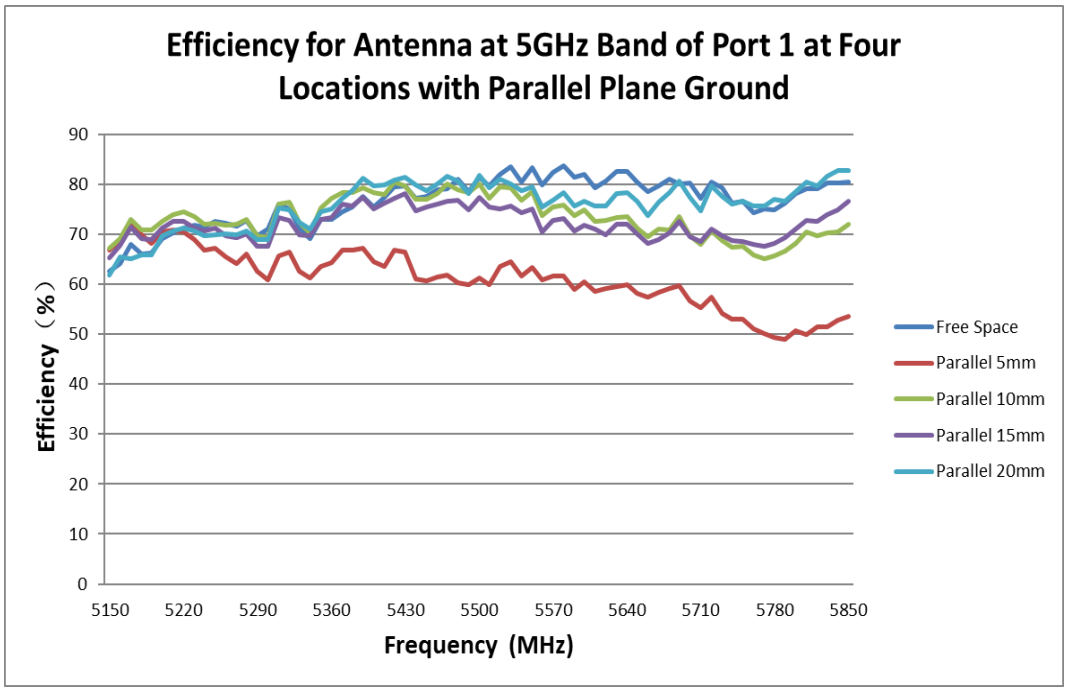

FIGURE 6.1.6 EFFICIENCY OF ANTENNA AT 5GHZ BAND OF PORT1 AT FOUR LOCATIONS WITH PARALLEL PLANE GROUND

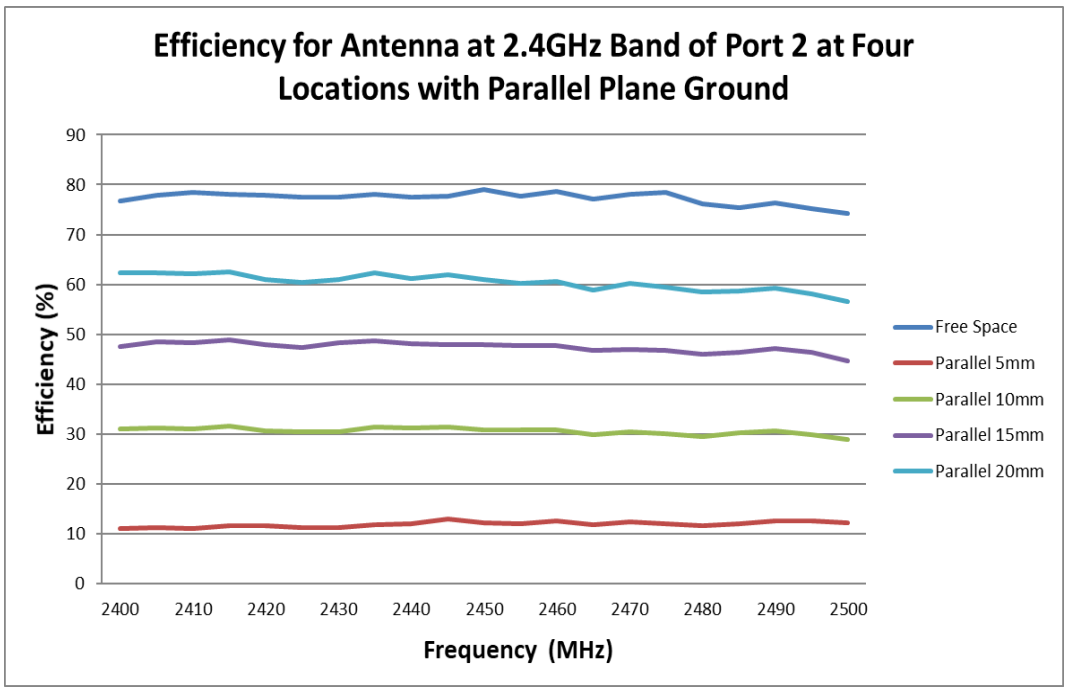

FIGURE 6.1.7 EFFICIENCY OF ANTENNA AT 2.4GHZ BAND OF PORT2 AT FOUR LOCATIONS WITH PARALLEL PLANE GROUND

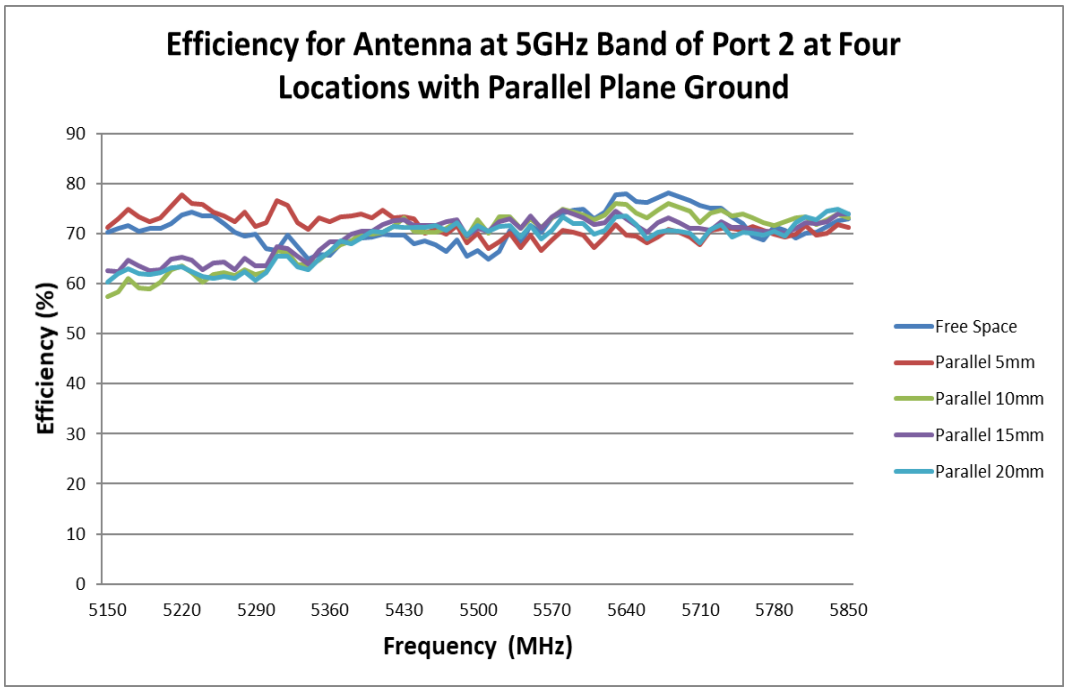

FIGURE 6.1.8 EFFICIENCY OF ANTENNA AT 5GHZ BAND OF PORT2 AT FOUR LOCATIONS WITH PARALLEL PLANE GROUND

6.2 ANTENNA RF PERFORMANCE AS A FUNCTION OF DIFFERENT LOCATIONS WITH VERTICAL PLANE GROUND

Four locations with vertical plane ground have been evaluated and these locations are shown in figure 6.2.0. The plane ground size is 90mm*90mm and we move the plane ground to four locations for each test. The distance between antenna and vertical plane ground affect the antenna performance slightly. We still suggest the minimum distance between antenna and plane ground is recommended to be 5mm.

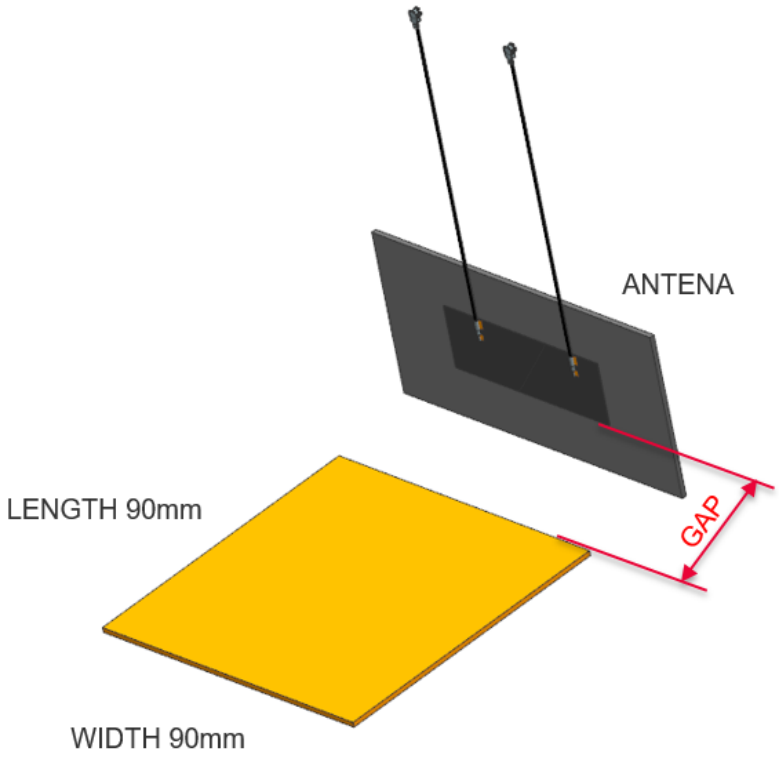

FIGURE 6.2.0 FOUR LOCATIONS WITH VERTICAL PLANE GROUND

Ground Size: 90mm*90mm;
Location 1: Distance between antenna and plane (GAP) ground is about 5mm;
Location 2: Distance between antenna and plane (GAP) ground is about 10mm;
Location 3: Distance between antenna and plane (GAP) ground is about 15mm;
Location 4: Distance between antenna and plane (GAP) ground is about 20mm.

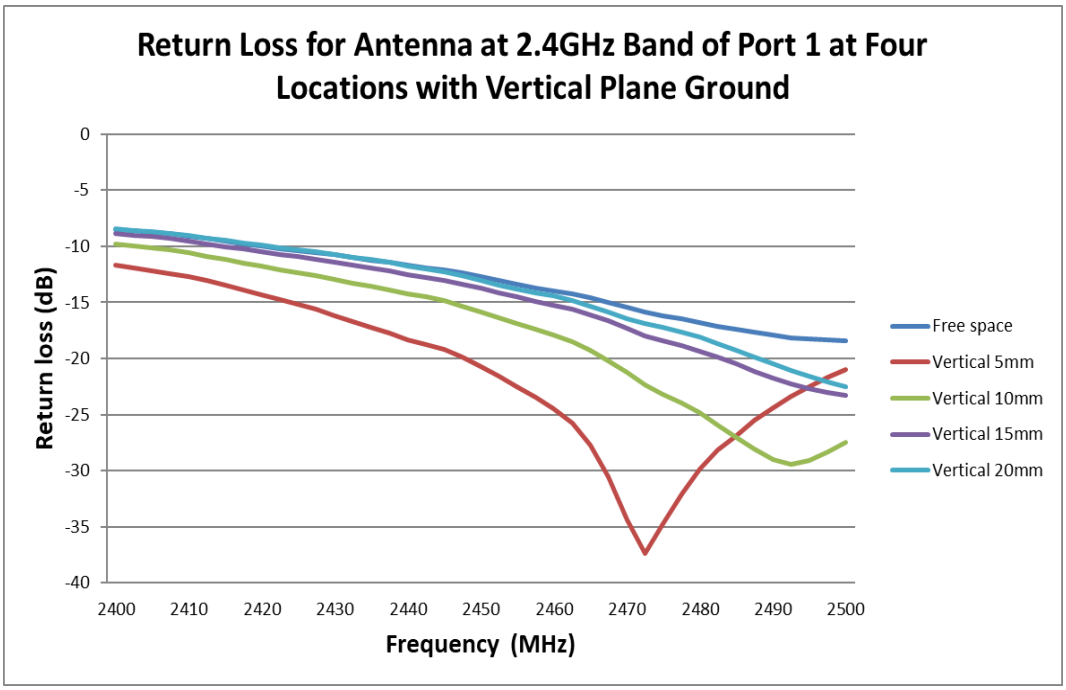

FIGURE 6.2.1 RETURN LOSS OF ANTENNA AT 2.4GHZ BAND OF PORT1 AT FOUR LOCATIONS WITH VERTICAL PLANE GROUND

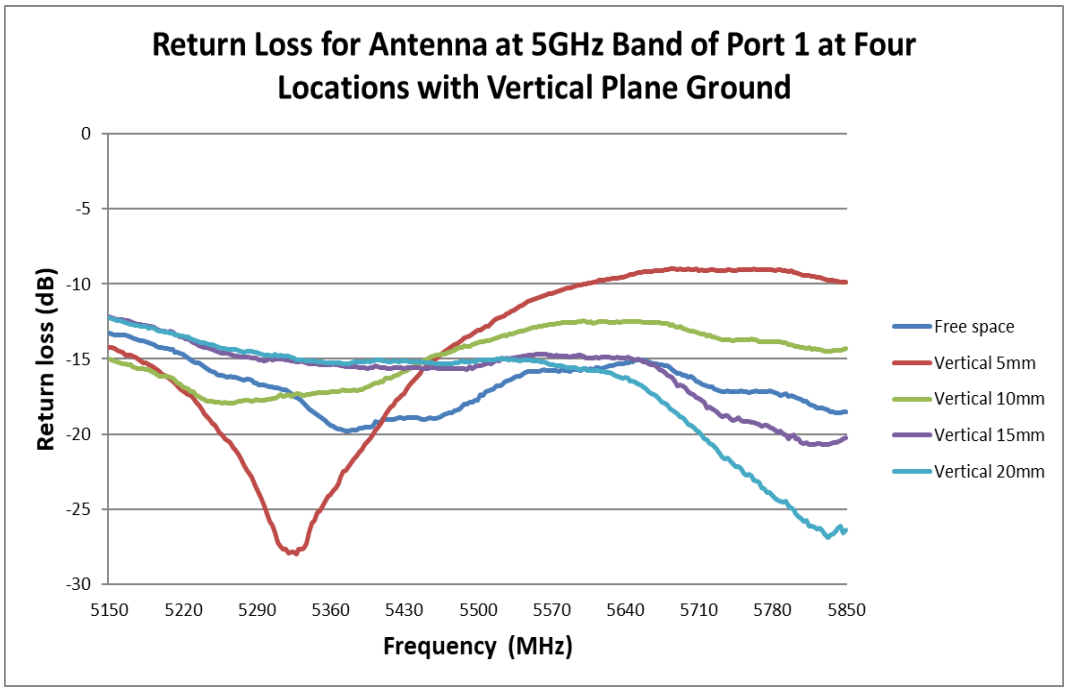

FIGURE 6.2.2 RETURN LOSS OF ANTENNA AT 5GHZ BAND OF PORT1 AT FOUR LOCATIONS WITH VERTICAL PLANE GROUND

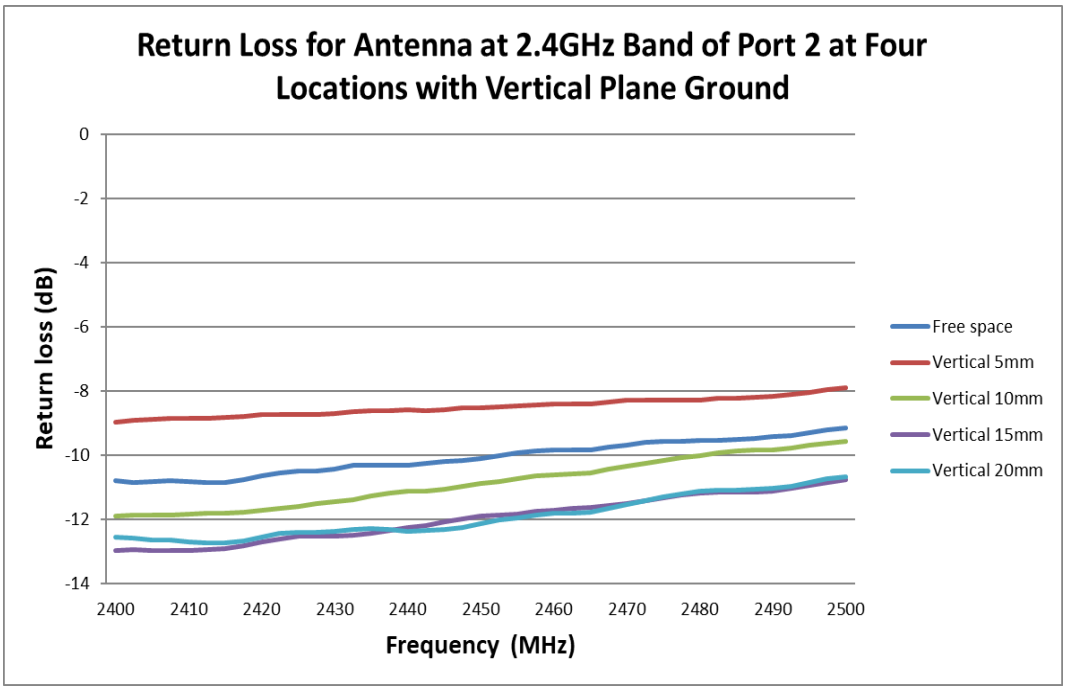

FIGURE 6.2.3 RETURN LOSS OF ANTENNA AT 2.4GHZ BAND OF PORT2 AT FOUR LOCATIONS WITH VERTICAL PLANE GROUND

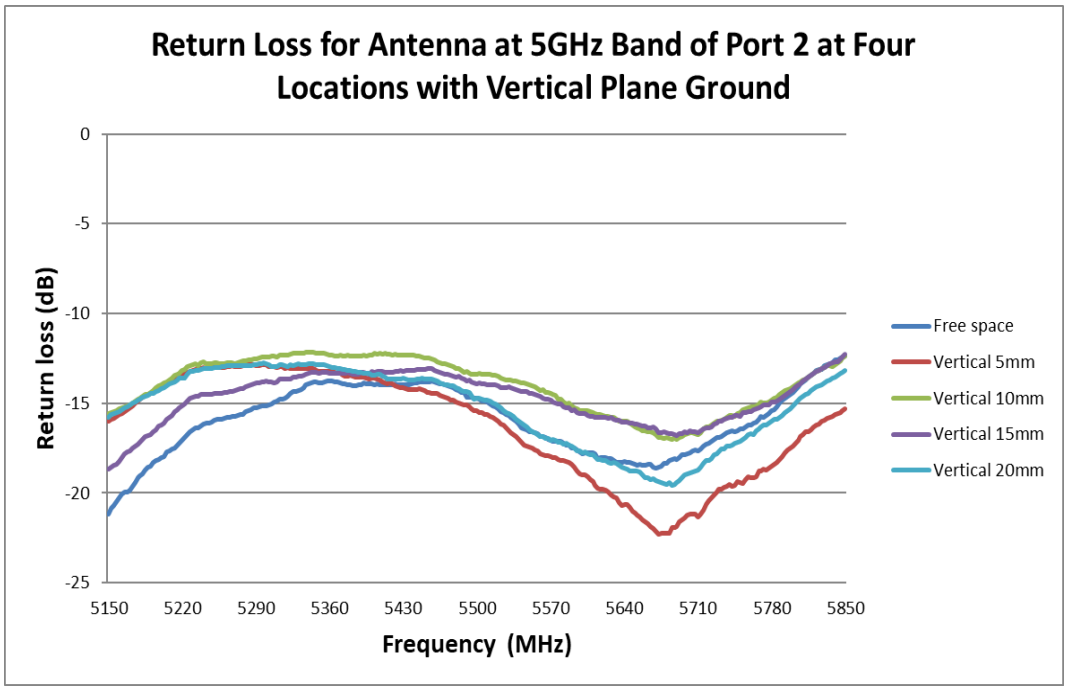

FIGURE 6.2.4 RETURN LOSS OF ANTENNA AT 5GHZ BAND OF PORT2 AT FOUR LOCATIONS WITH VERTICAL PLANE GROUND

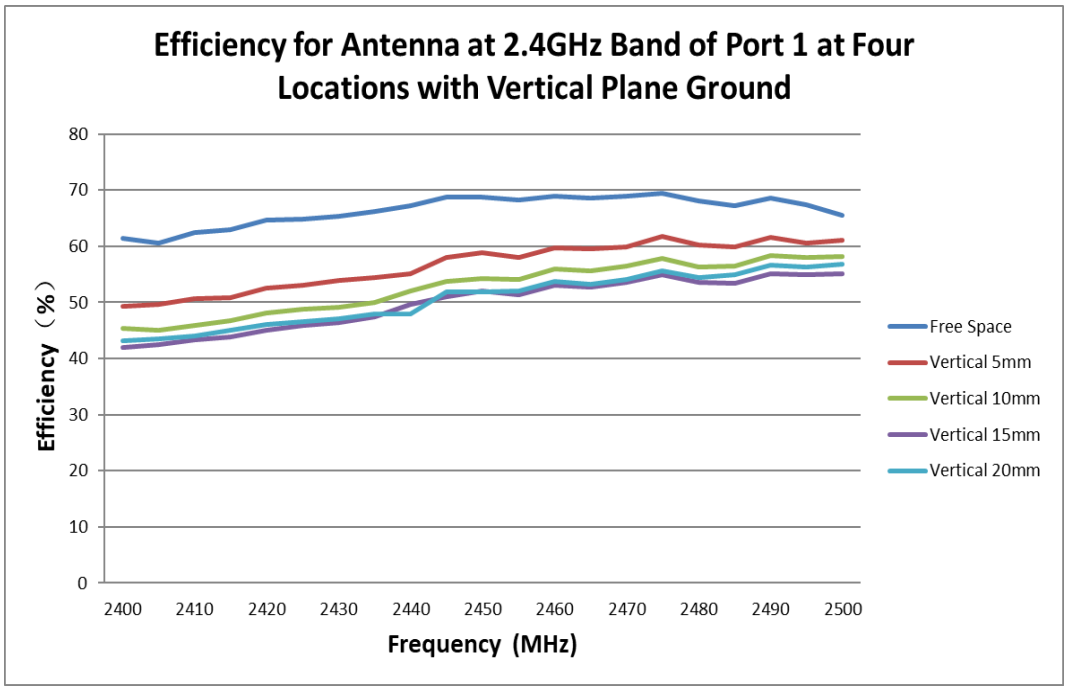

FIGURE 6.2.5 EFFICIENCY OF ANTENNA AT 2.4GHZ BAND OF PORT1 AT FOUR LOCATIONS WITH VERTICAL PLANE GROUND

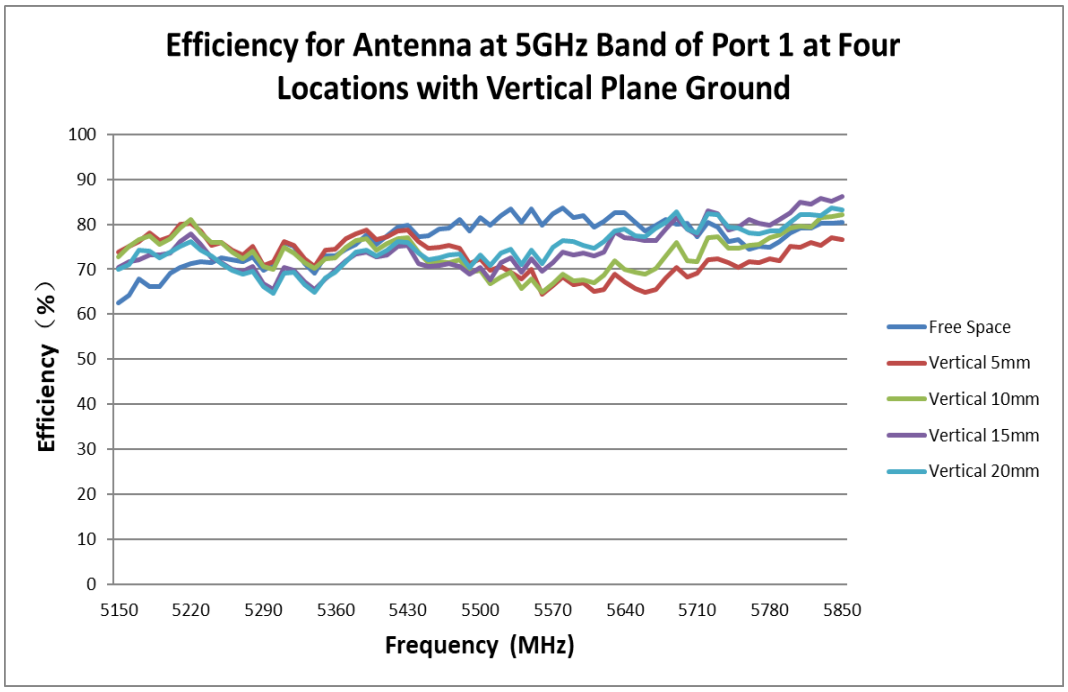

FIGURE 6.2.6 EFFICIENCY OF ANTENNA AT 5GHZ BAND OF PORT1 AT FOUR LOCATIONS WITH VERTICAL PLANE GROUND

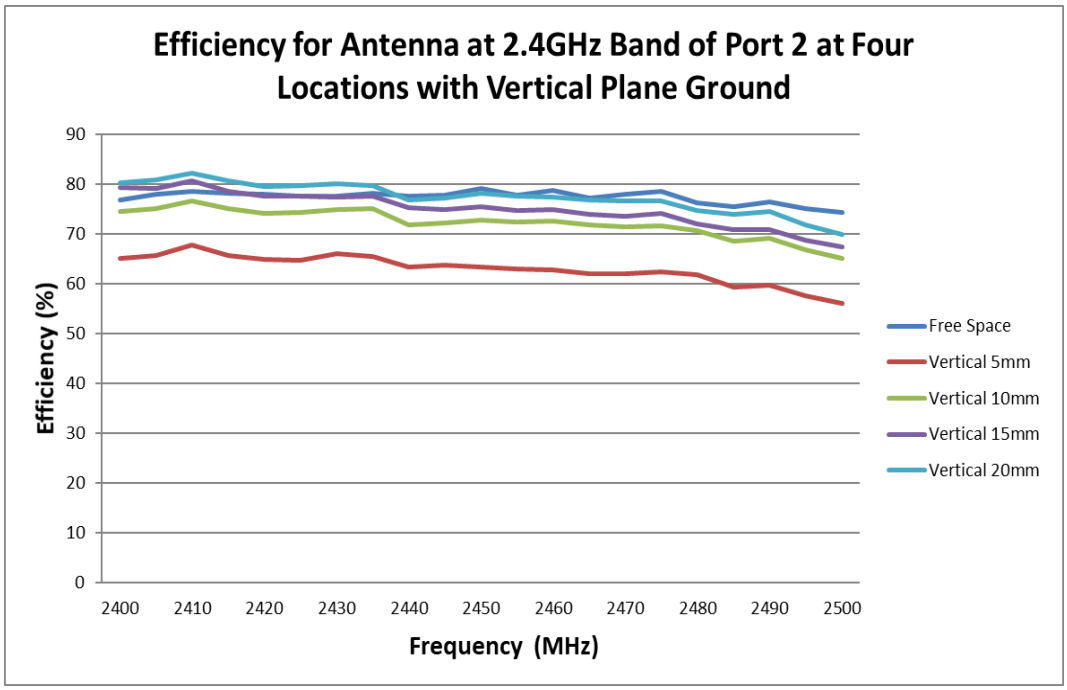

FIGURE 6.2.7 EFFICIENCY OF ANTENNA AT 2.4GHZ BAND OF PORT2 AT FOUR LOCATIONS WITH VERTICAL PLANE GROUND

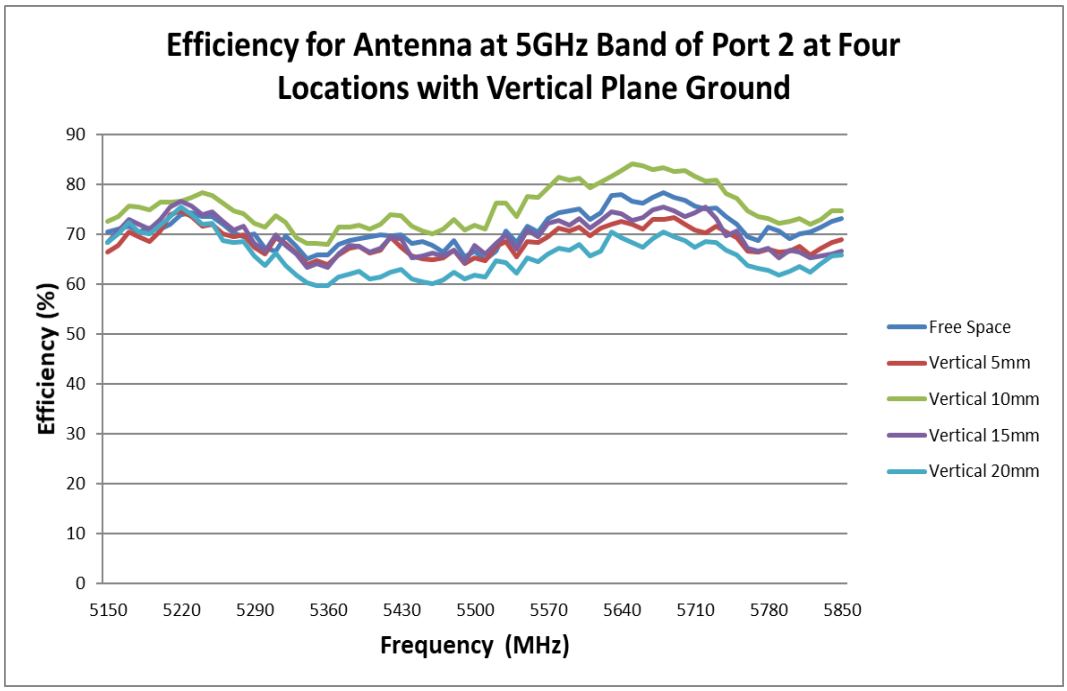

FIGURE 6.2.8 EFFICIENCY OF ANTENNA AT 5GHZ BAND OF PORT2 AT FOUR LOCATIONS WITH VERTICAL PLANE GROUND

6.3 ANTENNA RF PERFORMANCE AS A FUNCTION OF DIFFERENT DISTANCES WITH PARALLEL PLANE GROUND

Four locations with the parallel plane ground have been evaluated and these locations are shown in figure 6.3.0. The plane ground size is 90mm*90mm and we move the plane ground to four locations for each test. The distance between the antenna and the parallel plane ground affect the antenna performance slightly. We still suggest the minimum distance between the antenna and the plane ground is recommended to be 5mm.

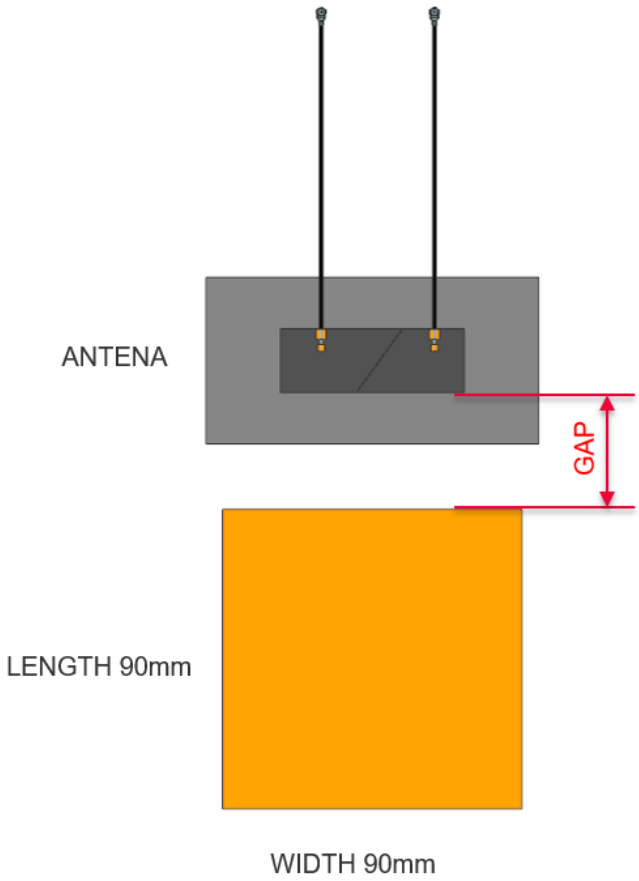

FIGURE 6.3.0 FOUR LOCATIONS WITH PARALLEL PLANE GROUND

Ground Size: 90mm*90mm;
Location 1: Distance between antenna and plane (GAP) ground is about 5mm;
Location 2: Distance between antenna and plane (GAP) ground is about 10mm;
Location 3: Distance between antenna and plane (GAP) ground is about 15mm;
Location 4: Distance between antenna and plane (GAP) ground is about 20mm.

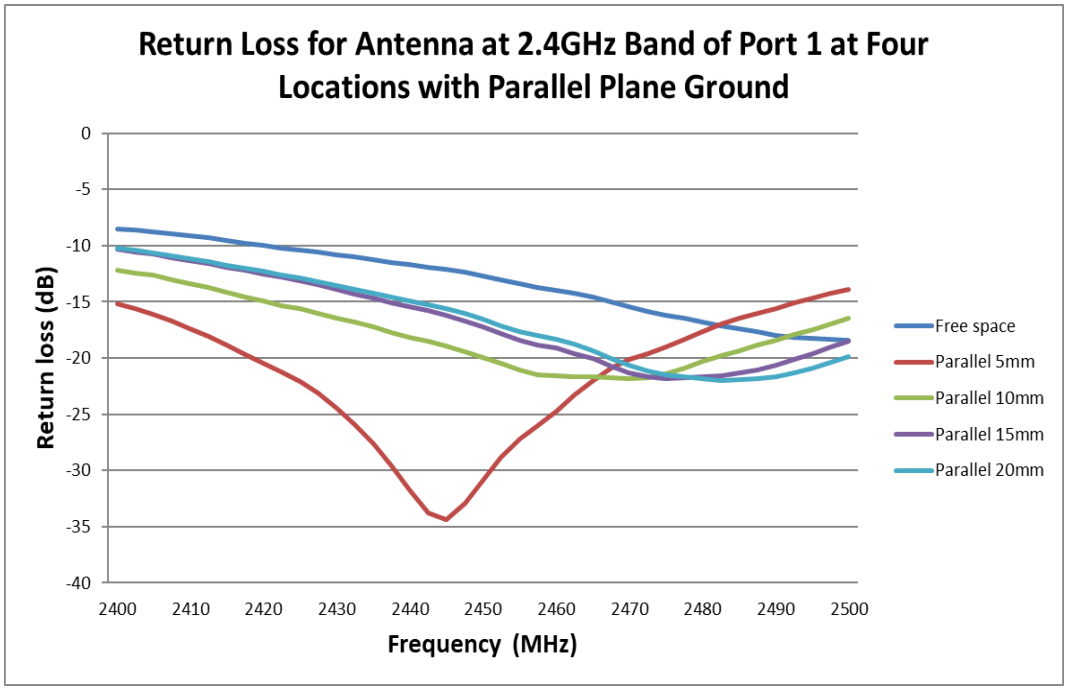

FIGURE 6.3.1 RETURN LOSS OF ANTENNA AT 2.4GHZ BAND OF PORT1 AT FOUR LOCATIONS WITH PARALLEL PLANE GROUND

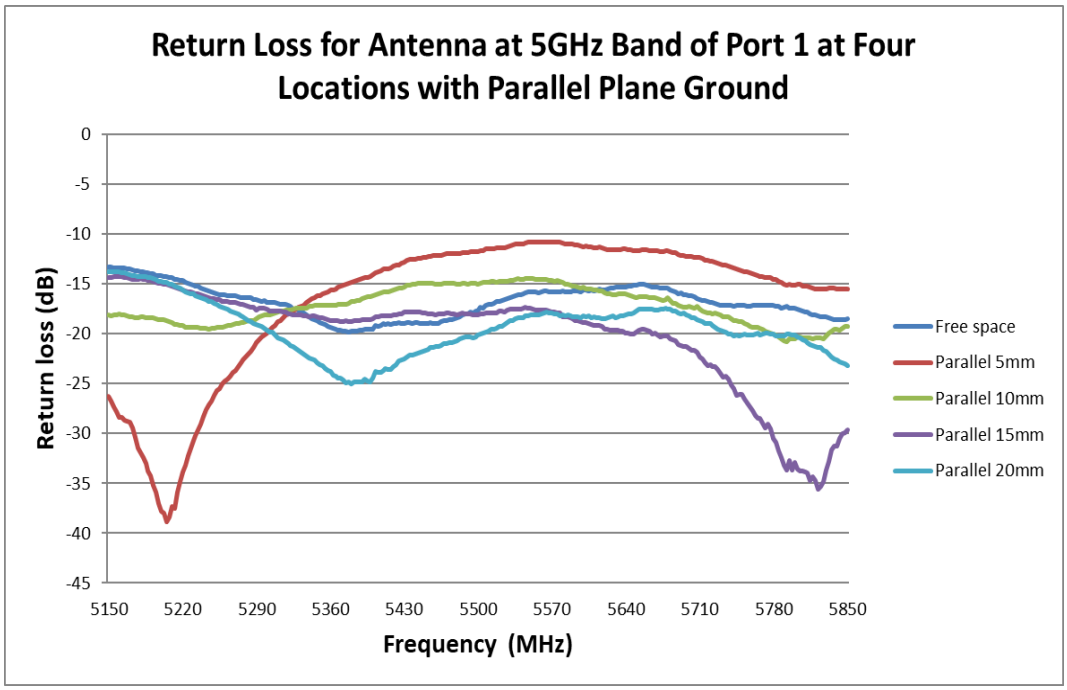

FIGURE 6.3.2 RETURN LOSS OF ANTENNA AT 5GHZ BAND OF PORT1 AT FOUR LOCATIONS WITH PARALLEL PLANE GROUND

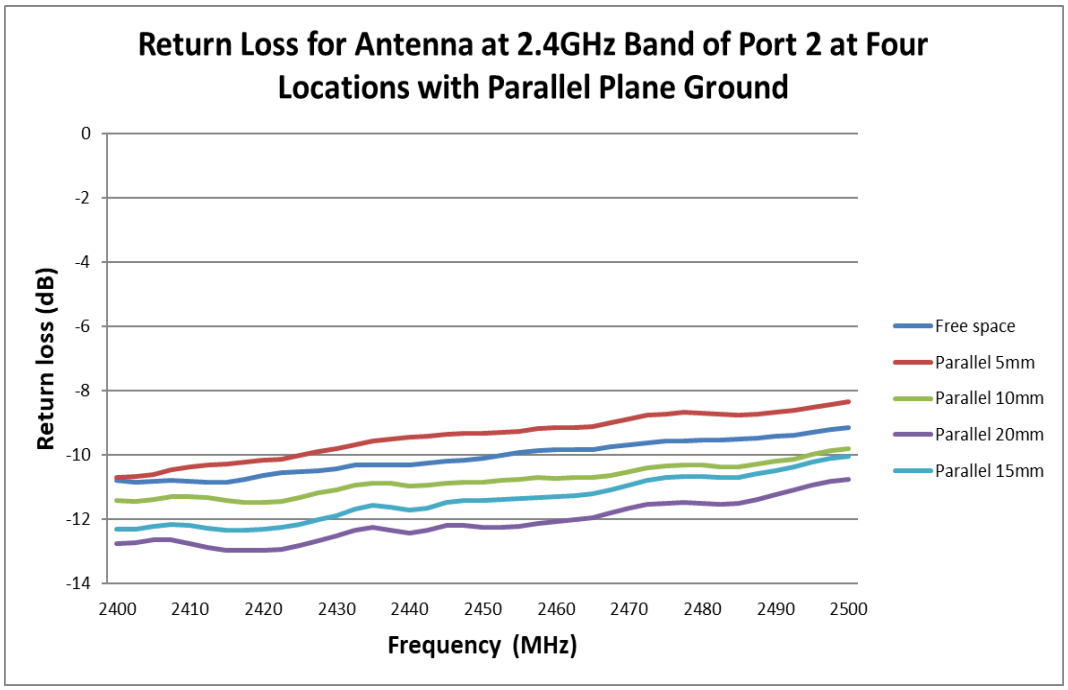

FIGURE 6.3.3 RETURN LOSS OF ANTENNA AT 2.4GHZ BAND OF PORT2 AT FOUR LOCATIONS WITH PARALLEL PLANE GROUND

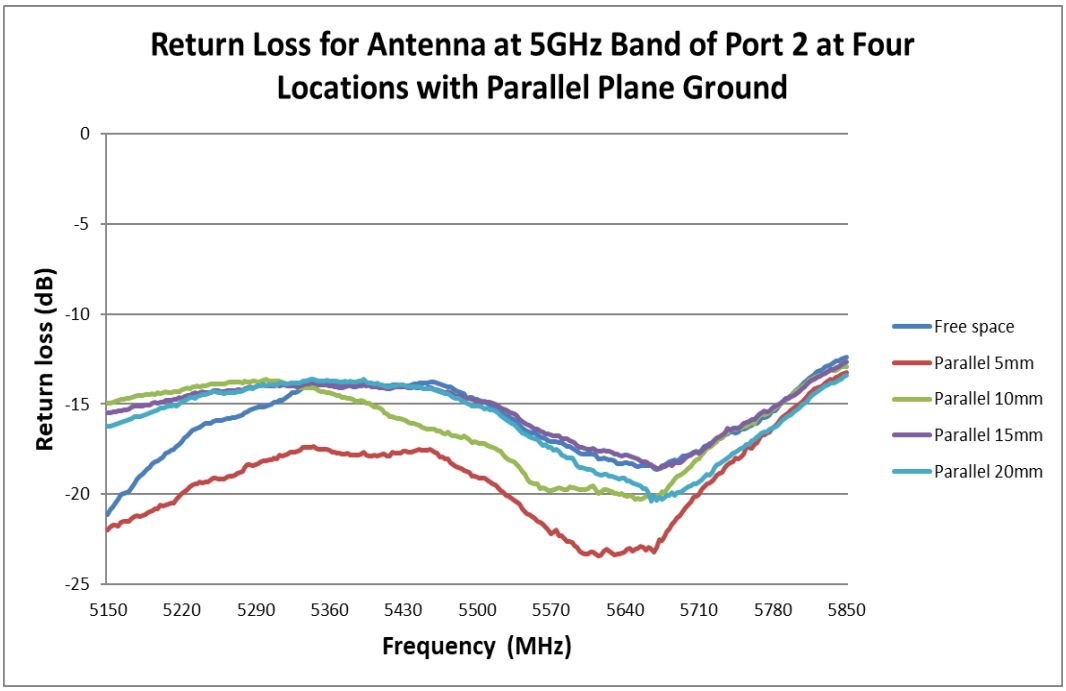

FIGURE 6.3.4 RETURN LOSS OF ANTENNA AT 5GHZ BAND OF PORT2 AT FOUR LOCATIONS WITH PARALLEL PLANE GROUND

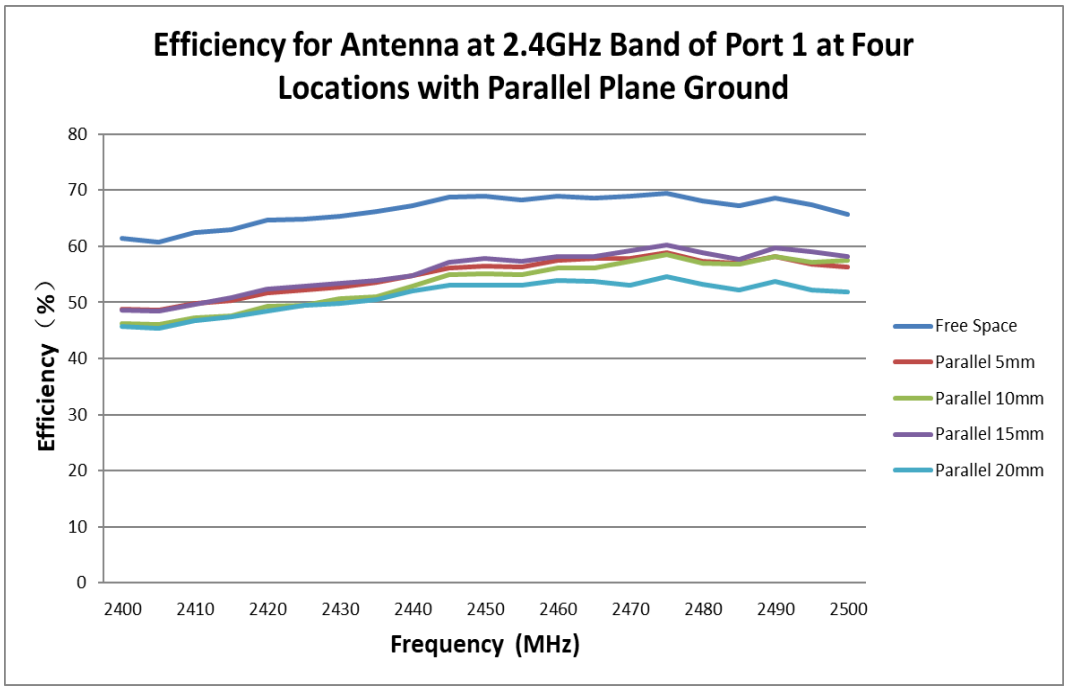

FIGURE 6.3.5 EFFICIENCY OF ANTENNA AT 2.4GHZ BAND OF PORT1 AT FOUR LOCATIONS WITH PARALLEL PLANE GROUND

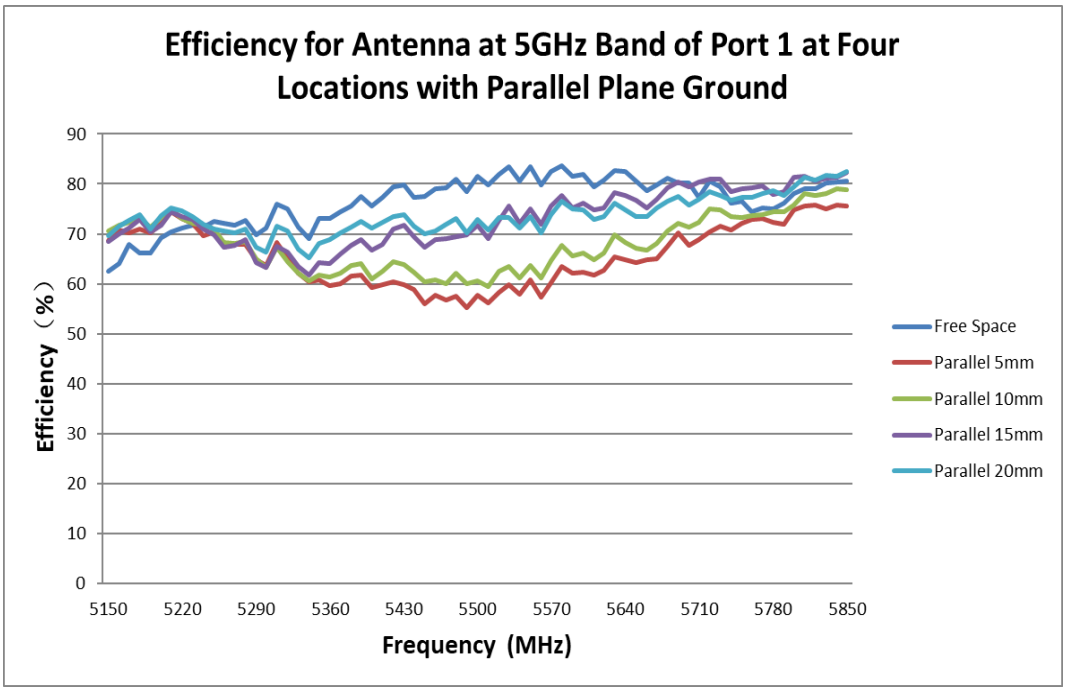

FIGURE 6.3.6 EFFICIENCY OF ANTENNA AT 5GHZ BAND OF PORT1 AT FOUR LOCATIONS WITH PARALLEL PLANE GROUND

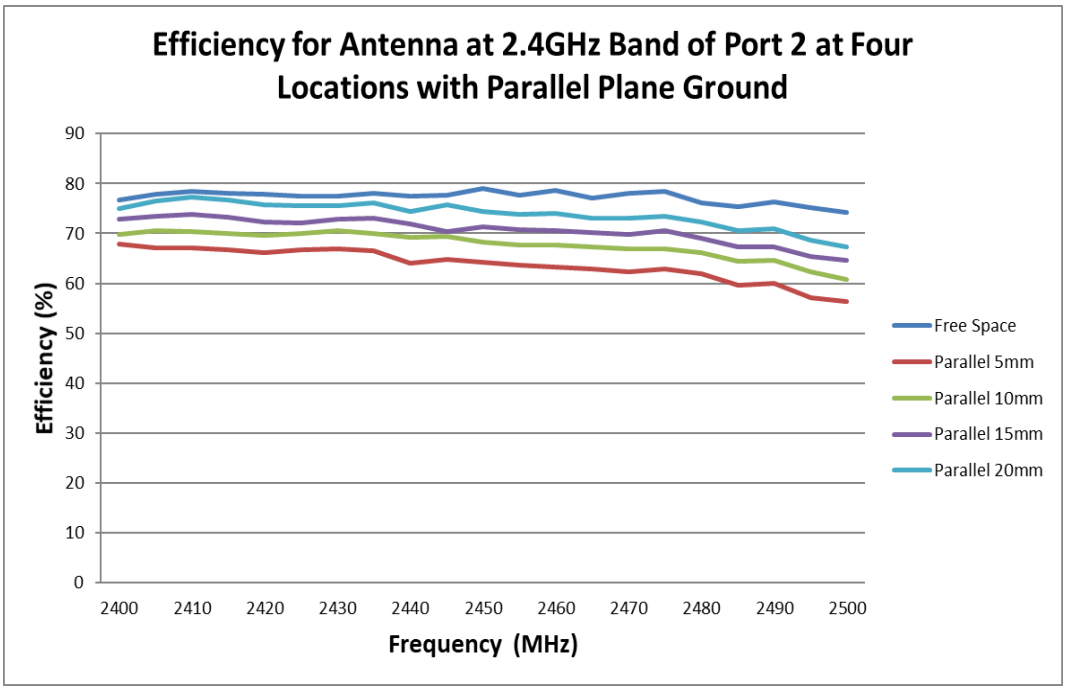

FIGURE 6.3.7 EFFICIENCY OF ANTENNA AT 2.4GHZ BAND OF PORT2 AT FOUR LOCATIONS WITH PARALLEL PLANE GROUND

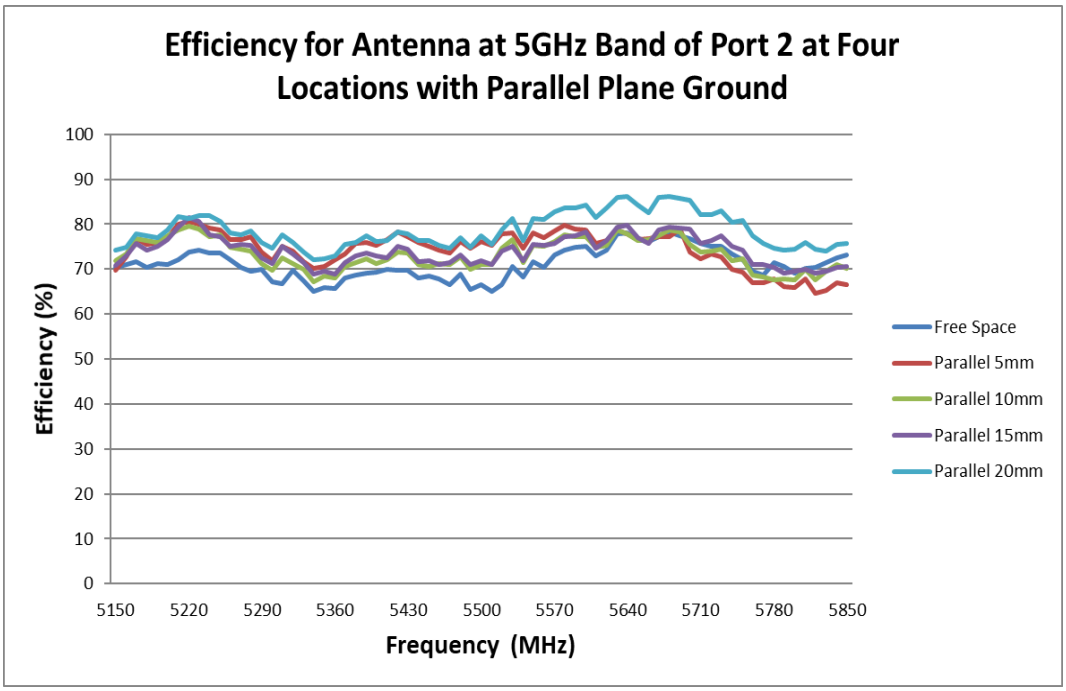

FIGURE 6.3.8 EFFICIENCY OF ANTENNA AT 5GHZ BAND OF PORT2 AT FOUR LOCATIONS WITH PARALLEL PLANE GROUND

7.0 THE ANTENNA PERFORMANCE VARIATION WITH CABLE LENGTH

7.0.1 CABLE LOSS

ITEM	DESCRIPTION	TEST CONDITION	REQUIREMENT		
7.0.1.1	Frequency Range	2.4GHz~7.125GHz	2.4GHz~2.5 GHz	5GHz~6GHz	6GHz-7.125GHz
7.0.1.2	Attenuation	1m cable measured by VNA5071C	⩽3dB/m	⩽5.5dB/m	⩽6.5dB/m

7.0.2 CABLE LENGTH AFFECT THE ANTENNA PERFORMANCE

Balance antenna resonance is insensitive by cable length, but the cable loss will affect the total efficiency. Refer to 7.0.1

7.0.3 FOR EXAMPLE

Base on the 100mm cable performance, we can mostly compute the 300mm cable's. This example is only for dipole antenna (Port 2).

Port 2	100mm cable			300mm cable	
Frequency (MHz)	Efficiency (dB)	Efficiency (%)	Cable Loss	Efficiency (dB)	Efficiency (%)
	X		X-LOSS=Y	Y	
2400	-1.17	76.43	0.2m*3dB/m	-1.77	66.57
2420	-1.09	77.87		-1.69	67.82
2440	-1.05	78.53		-1.65	68.39
2460	-1.08	78.06		-1.68	67.99
2480	-1.09	77.83		-1.69	67.78
2500	-1.11	77.37		-1.71	67.39
5150	-1.13	77.17	0.2m*5.5dB/m	-2.23	59.90
5200	-1.08	78.05		-2.18	60.59
5250	-1.11	77.53		-2.21	60.18
5300	-1.10	77.65		-2.20	60.28
5350	-1.01	79.20		-2.11	61.48
5400	-1.12	77.33		-2.22	60.02
5450	-1.04	78.68		-2.14	61.07
5500	-1.09	77.73		-2.19	60.33
5550	-1.09	77.83		-2.19	60.42
5600	-1.05	78.54		-2.15	60.97
5650	-1.19	76.10		-2.29	59.07
5700	-1.23	75.30		-2.33	58.46
5750	-1.18	76.29		-2.28	59.22
5800	-1.25	74.94		-2.35	58.17
5850	-1.30	74.07		-2.40	57.49

5925	-2.72	53.41		-3.82	41.46

Port 2	100mm cable			300mm cable	
Frequency (MHz)	Efficiency (dB)	Efficiency (%)	Cable Loss	Efficiency (dB)	Efficiency (%)
	X		X-LOSS=Y	Y	
6000	-2.49	56.38	0.2m*6.5dB/m	-3.79	41.79
6100	-2.55	55.62		-3.85	41.23
6200	-2.15	60.89		-3.45	45.13
6300	-1.45	71.62		-2.75	53.09
6400	-1.72	67.30		-3.02	49.89
6500	-1.87	65.05		-3.17	48.22
6600	-1.86	65.22		-3.16	48.35
6700	-1.39	72.55		-2.69	53.78
6800	-1.57	69.61		-2.87	51.60
6900	-0.95	80.39		-2.25	59.59
7000	-0.95	80.38		-2.25	59.59
7100	-0.87	81.90		-2.17	60.71
7125	-0.86	82.04		-2.16	60.81

The data is just for your reference, all accurate performance should be according to the test results in the OTA chamber

8.0 CHANGE HISTORY

REV	DATA	DESCRIPTION
A	2018/09/21	First Release
B	2020/07/06	Update file layout and add 6-7.125GHz band

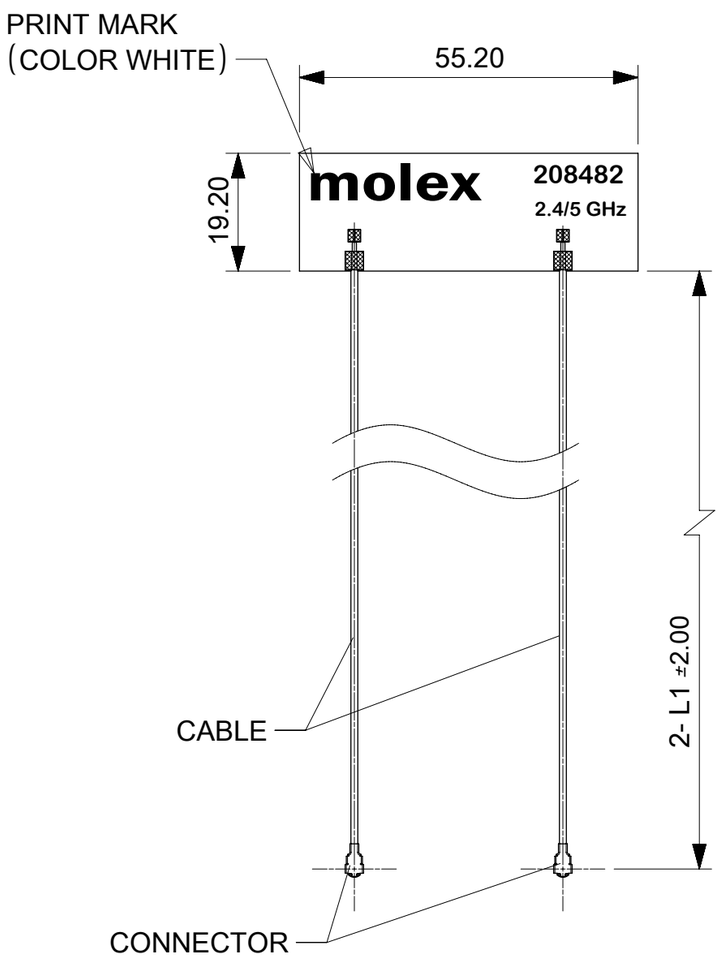

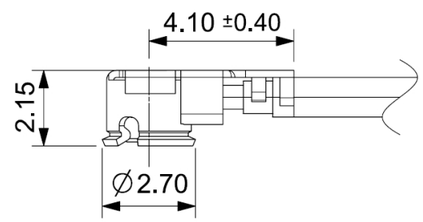

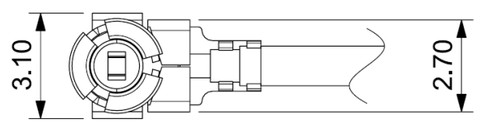

CONNECTOR

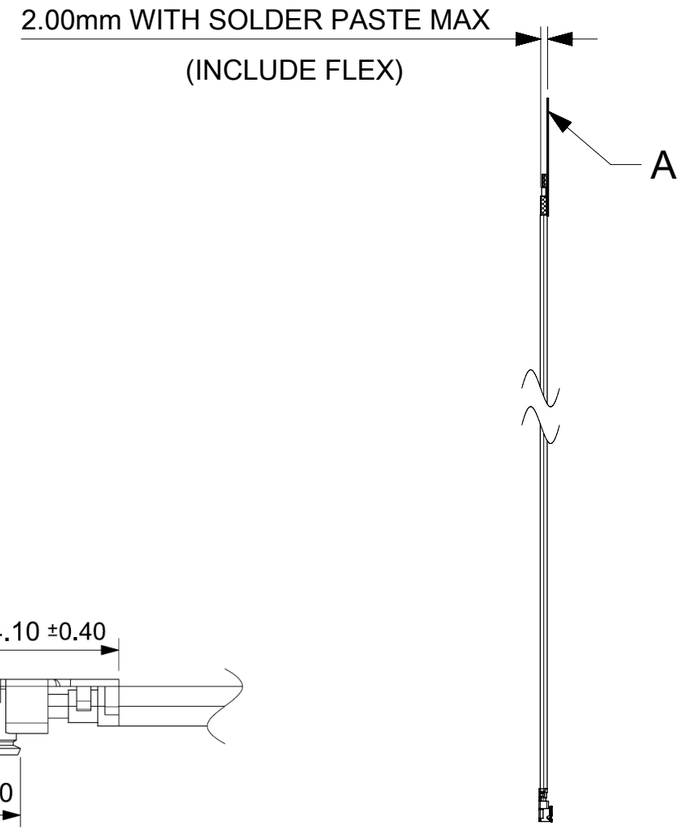

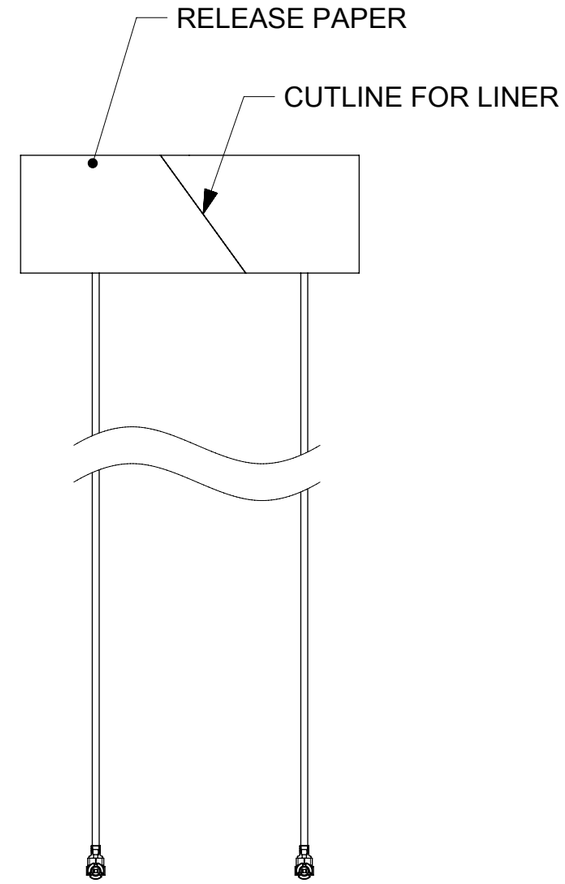

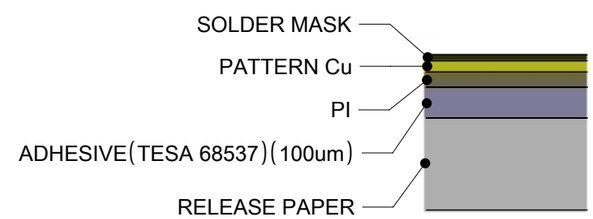

DETAIL A
SCALE 100:1
FLEX LAYER

NOTES:
1. MATERIAL:
   FLEX SIZE:55.2*19.2mm
   CABLE:∅1.13 mm
   CONNECTOR:OD1.13 RF 2.5H U.FL CONNECTOR
   (PLUG GOLD PLATED)
2. SOLDER MASK:BLACK.
3. FOR PULL TEST, CAN NOT LIFT UP IN THE VERTICAL DIRECTION.
4. THE CONNECTOR WILL BE PROTECTED WITH A CAP
5. APPLICATION SPEC PLEASE REFER TO AS OF 2084820100.
6. PRODUCT SPEC PLEASE REFER TO PS OF 2084820100.
7. PACKAGING DRAWING SPEC PLEASE REFER TO PK OF 2084820100.

ITEM	MATERIAL NO.	LENGTH"L1"	CABLE LENGTH
1	2084820100	93.24mm	100mm
2	2084820150	143.24mm	150mm
3	2084820200	193.24mm	200mm

DOCUMENT STATUS	P1	RELEASE DATE	2018/10/22 07:27:54

THIS DRAWING CONTAINS INFORMATION THAT IS PROPRIETARY TO MOLEX ELECTRONIC TECHNOLOGIES, LLC AND SHOULD NOT BE USED WITHOUT WRITTEN PERMISSION

SYMBOLS: E = 0; E = 0; E = 0; S = 0; ▼ = 0; C = 0; ☒ = 0; ■ = 0; ▽ = 0

DIMENSION UNITS: mm
SCALE: 1:1

GENERAL TOLERANCES (UNLESS SPECIFIED)

ANGULAR TOL	±	0.5 °
4 PLACES	±	
3 PLACES	±	0.2
2 PLACES	±	0.25
1 PLACE	±	0.3
0 PLACES	±	0.5

DRAFT WHERE APPLICABLE MUST REMAIN WITHIN DIMENSIONS

CURRENT REV DESC:

EC NO: 606016
DRWN: KCHENG06 2018/10/18
CHK'D: CZHOU05 2018/10/22
APPR: CZHOU05 2018/10/22

INITIAL REVISION:
DRWN: KCHENG06 2018/10/18
APPR: CZHOU05 2018/10/22

THIRD ANGLE PROJECTION | DRAWING: A3-SIZE | SERIES: 208482

molex

2.4/5GHZ MIMO 2X2 FLEXIBLE ANTENNA

PRODUCT CUSTOMER DRAWING

DOCUMENT NUMBER	DOC TYPE	DOC PART	REVISION
2084820100	PSD	000	A

MATERIAL NUMBER	CUSTOMER	SHEET NUMBER
SEE TABLE	GENERAL MARKET	1 OF 1

FORMAT: tb-prod-A3
REVISION: H
DATE: 2018/01/18

REVISIONS				
REV.	DESCRIPTION	DATE	CHANGED BY	APPROVED BY
1	INITIAL RELEASE	1/10/2024	J.JACK	K.CHAU

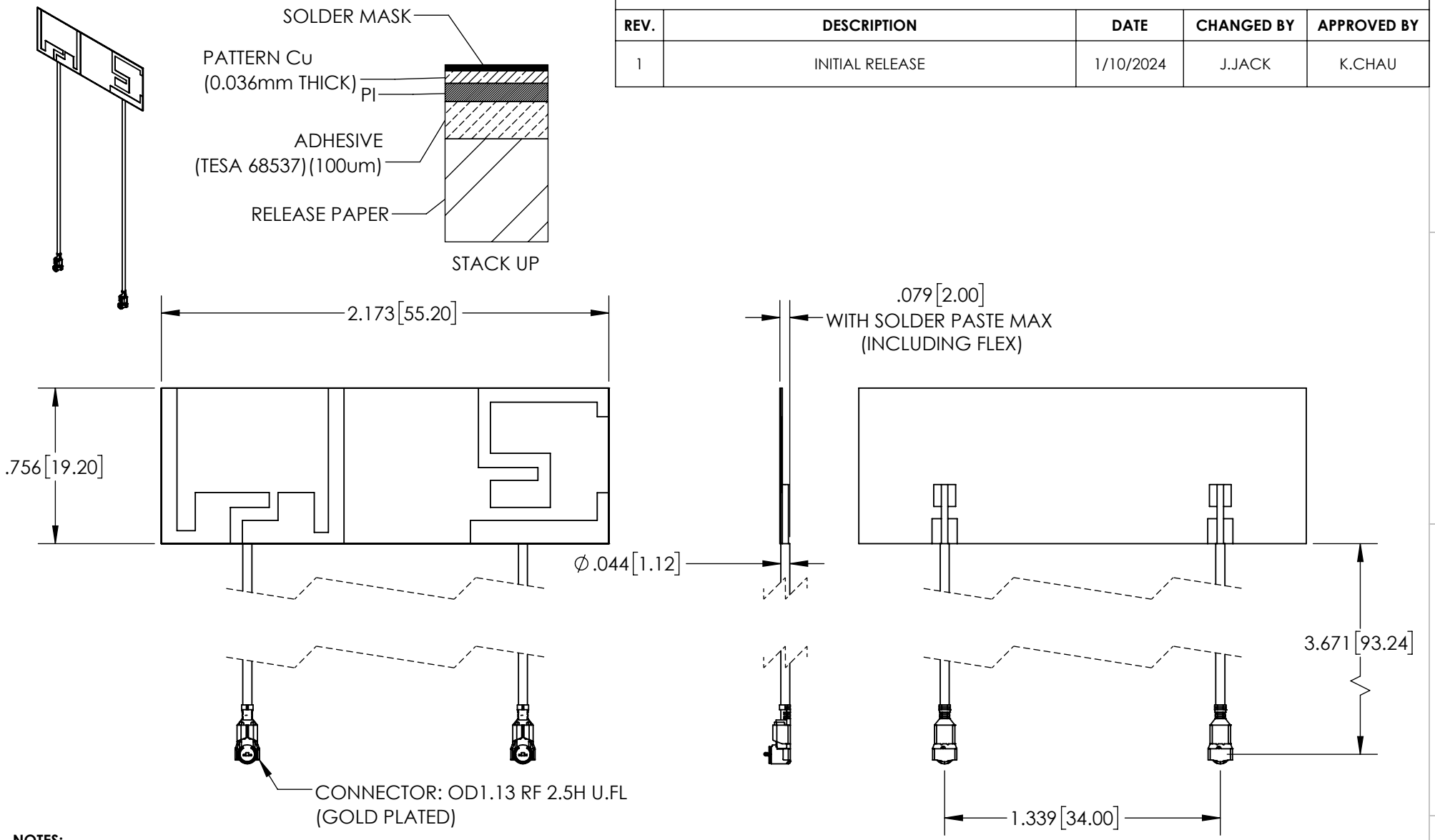

NOTES:

1) SOLDER MASK: BLACK
2) FOR PULL TEST, CAN NOT LIFT UP IN THE VERTICAL DIRECTION.
3) THE CONNECTOR WILL BE PROTECTED WITH A CAP

PROPRIETARY AND CONFIDENTIAL
THE INFORMATION CONTAINED IN THIS DRAWING IS THE SOLE PROPERTY OF VIVID-HOSTING, LLC. ANY REPRODUCTION IN PART OR AS A WHOLE WI THOUT THE WRITTEN PERMISSION OF VIVID-HOSTING, LLC IS PROHIBITED.

UNLESS OTHERWISE SPECIFIED:
DIMENSIONS ARE IN INCHES[MM]

TOLERANCES:
FRACTIONAL ± 1/32
ANGULAR: MACH ± 0.5° BEND ± 90°

X.XX ± 0.01[0.3]
X.XXX ± 0.005[0.13]
X.XXXX ± 0.0005[0.013]

INTERPRET GEOMETRIC TOLERANCING PER:
ANSI Y14.5M-1994

VIVIDHOSTING

VIVID-HOSTING, LLC
4275 EXECUTIVE SQ. STE 206, LA JOLLA, CA 92037
P: 1-213-985-1771 | W: VIVID-HOSTING.NET

MATERIAL	DESCRIPTION		
N/A	2.4/5GHZ MIMO 2X2 FLEXIBLE ANTENNA		
FINISH	PART NUMBER		REV
N/A	208482-0100		1
DO NOT SCALE DRAWING	A	SCALE: 3:2	SHEET 1 OF 2

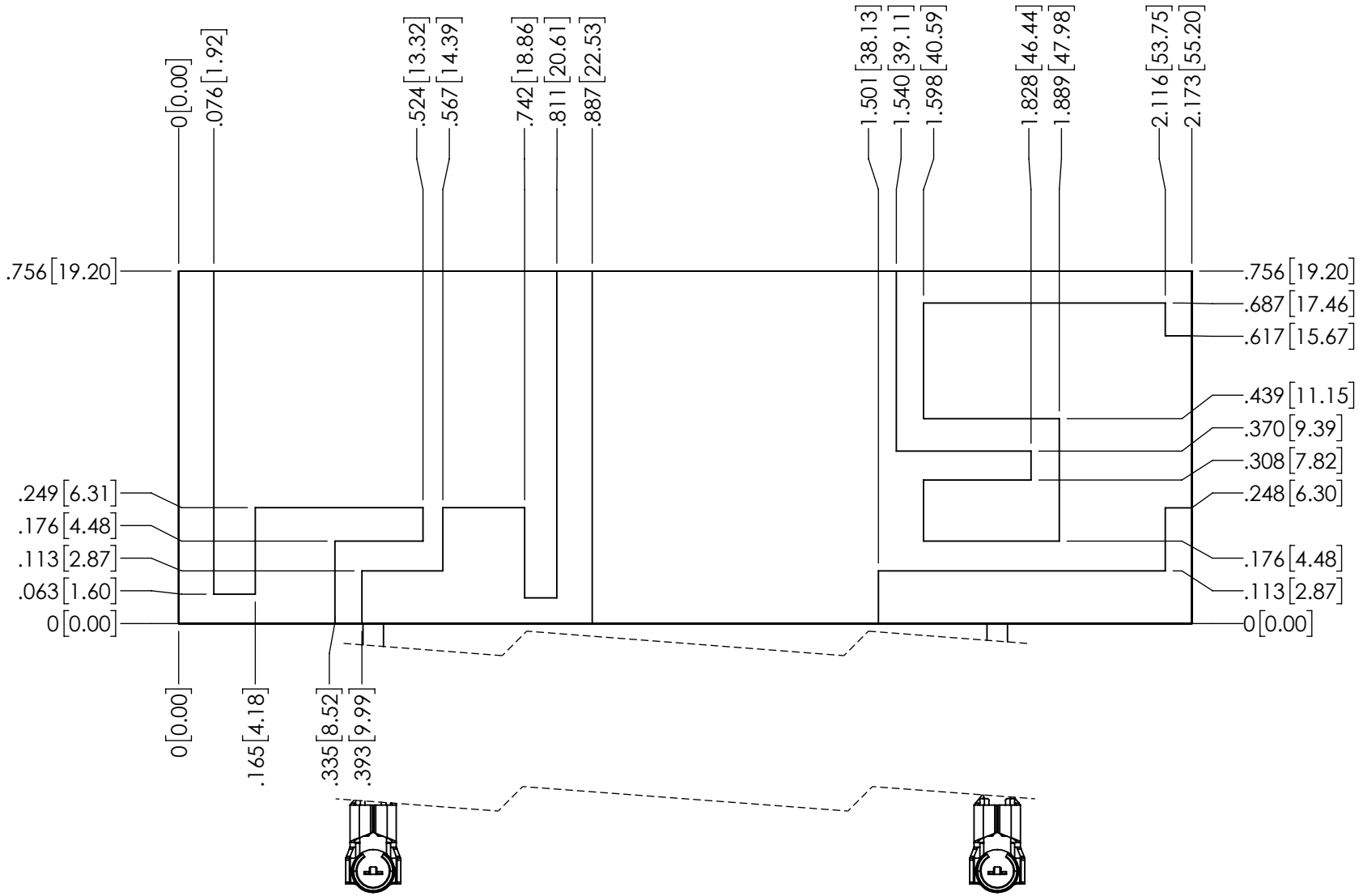

UNLESS OTHERWISE SPECIFIED:
DIMENSIONS ARE IN INCHES[MM]

TOLERANCES:
FRACTIONAL ± 1/32
ANGULAR: MACH ± 0.5° BEND ± 90°

X.XX ± 0.01[0.3]
X.XXX ± 0.005[0.13]
X.XXXX ± 0.0005[0.013]

INTERPRET GEOMETRIC TOLERANCING PER:
ANSI Y14.5M-1994

VIVIDHOSTING

VIVID-HOSTING, LLC
4275 EXECUTIVE SQ. STE 206, LA JOLLA, CA 92037
P: 1-213-985-1771 | W: VIVID-HOSTING.NET

MATERIAL	DESCRIPTION	
N/A	2.4/5GHZ MIMO 2X2 FLEXIBLE ANTENNA	
FINISH	PART NUMBER	REV
N/A	208482-0100	1
DO NOT SCALE DRAWING	A	SCALE: 3:1 / SHEET 2 OF 2

PROPRIETARY AND CONFIDENTIAL
THE INFORMATION CONTAINED IN THIS DRAWING IS THE SOLE PROPERTY OF VIVID-HOSTING, LLC. ANY REPRODUCTION IN PART OR AS A WHOLE WI THOUT THE WRITTEN PERMISSION OF VIVID-HOSTING, LLC IS PROHIBITED.