User Manual

PRODUCT 产品	Remote Control 遥控器	Customer Part No. 客户料号	TYRC-1
		Seneasy Model No. 供方部品型号	TYRC-1

1. General information 一般信息

Title 标题	Remote Control 遥控器
Manufacturer 制造商	Telly, Inc.
Country of origin 原产国	China 中国

2. Unit standard 单位

No.序号	Check Item 检查项目	Description/Specification 描述/规范
1	Standard Voltage 标准电压	DC 3.0V
2	Operation Voltage 工作电压	DC 2.2V~3.6V
3	Operation temperature 工作温度	-10°C-50°C(≤95%RH)，86-106Kpa
4	Storage temperature 储存温度	-20°C~60°C
5	Battery type 电池类型	UM-4,AAAbattery*2
6	Netweight(No battery, no packaging) 净重（不含电池、包装）	Subject to sample±3% 以样品为准±3%

Specification 规范

3. Visual specification

No.	Check Item 检查项目	Description/Specification 描述/规范
1	Appearance 外观	Refer to appearance drawing 请参阅外观图
2	Case material 塑胶材质	ABS
3	Rubber KEY PADmaterial 按键材料	Rubber 橡胶
4	Nameplate material 铭牌材料	N/A
5	Assembly 组装	No moving parts inside the RC 遥控器内部没有活动部件
6	Plastic visual 塑料外观	No visual of scratch, crack, contamination and deformation 外观无划伤、裂纹、污染和变形
7	Printing visual 丝印外观	Printings and Indications are same as drawing 印刷和说明与图纸相同
Remark: For all visual standard should refer to approved sample 备注:所有外观标准应以认可的样品为准		

4. Mechanical specification 机械测试规格

No.	Check Item 检查项目	Description/Specification 描述/规范
1	Key force 按键作用力	200±50gf
2	Key stroke 按键行程	0.2-1mm
3	Rubber key press 硅胶按键	Key should return fast after key released 按键释放后，按键应快速返回
4	Button operating feel 按键手感	When pressing buttons, there shall have a clear click feeling 按下按钮时，应有清晰的点击感
5	Alcohol abrasion resistance 酒精耐磨	Select a plane for the test, rub the test surface back and forth with 99.8% alcohol, the pressure is 5N, and the speed is 30 back and forth/minute. Plastic shell: 50 times, rubber button: 100 times, rubber paint: 50 times, silk screen without peeling and exposure 选择平面进行测试，用浸有浓度为 99.8%酒精来回磨擦测试表面，压力 5N，速度为 30 来回/分钟。

		塑胶壳：50 次，橡胶钮：100 次，橡胶漆：50 次，丝印无脱落和露底现象
6	Rubber friction 橡皮摩擦	Use a 7017R eraser and apply a 5N force to vertically wipe the silk screen. Line: 25.4mm; Speed: 30 round-trip/minute. Shell screen printing: 30 times. RUBBER button silk printing: 20 times. Use an air gun to blow away the residue of the rubber while wiping the silk screen. Screen printing without peeling or exposing the bottom 使用 7017R 橡皮擦,以 5N 力度垂直擦丝印。行:25.4mm； 速度:30 来回/分钟。 机壳丝印： 30 次。 RUBBER 钮丝印： 20 次。 擦丝印的同时用风枪将橡胶的残渣吹走。 丝印无脱落和露底现象
7	Screen printing, oil spray slicing adhesive paper testing 丝印、喷油切片胶纸测试	Draw a grid on the surface of the test location at an angle of 20 ° to 30 ° using a specialized hundred grid knife; The depth of the frame is based on only passing through the coating without damaging the material; Then use a brush to clean the fragments in the test area; Stick 3M adhesive tape onto the test cell and use an eraser to press the surface of the tape to ensure smooth adhesion between the tape and the test surface. Let it stand for 90 seconds; Pull up one end of the tape at a 60 ° angle, quickly remove the tape, and check for coating detachment; 1. If there is paint cracking during the process of drawing a hundred squares, it is judged as NG; 2. If there is detachment phenomenon during the testing process in the undivided area, it is judged as NG; 3. There are small pieces of paint peeling off at the edges and intersections of the line, and the total peeling area is between 5% and 15%; 用专用百格刀呈角度 20°～30°角度在测试位置表面划网格；画格深度以只划透涂层，不伤及素材为准；然后用毛刷将测试区域的碎片刷干净；将 3M 胶带粘住被测试小格，并使用橡皮擦按压胶带表面，使胶带与测试面尽量粘合平整，静置 90s 后；拉起胶带的一端呈 60° ，迅速扯下胶带,检查涂层脱落状况； 1. 在划百格过程中出现油漆崩裂判为 NG; 2. 未划百格区域在测试过程中出现脱落现象，判定 NG; 3. 在划线的边缘及交叉点处有小片的油漆脱落，且脱落总面积在 5%～ 15%之间 ；
8	Edible oil resistance test 耐食用油测试	Apply edible oil to the test surface and place it in an oven with a temperature and humidity of 40 ℃, 90-95% (RH), for 100 hours. Test samples: rubber, plastic, oil spray No changes on the test surface

		将食用油涂在测试表面，放入温湿度为 40 ℃ 90-95%(RH)炉内 100H 。测试样品：橡胶、塑胶、喷油 测试表面无变化
9	Detergent testing 洗洁剂测试	Soak half of the remote control in kitchen detergent for 24 hours, then remove it There is no difference between the part immersed in the solution and the part outside 将遥控器的一半浸在厨房洗洁剂里放置 24H，然后取出 浸在溶液里的部分和外面的部分没有差别
10	Hand sweat test 抗手汗测试	Spray artificial sweat on the test surface and place it in an environment of 40 ℃, 90-95% humidity, for 100 hours. There is no significant change in the appearance of the product, and there are no abnormalities such as discoloration, blistering, cracking, or detachment. 在测试表面喷上人造汗液，在 40℃，90-95%的湿度环境中放置 100H。 产品外观无明显变化，无变色、起泡、开裂、脱落等异常。
11	Key life 按键的负荷寿命	Key service life tester: select more than two common key centers to apply a force of 500g vertically, with an interval of 60 times per minute, and the test times of 300000 times (100000 times per minute, completed in 3 times). The mechanical appearance is normal, without fracture damage, and meets the specifications and standards. Key force: the original value ± 20%. The function is normal after the test 按键寿命测试仪：选择两个以上的常用键中心垂直施以压力 500g 的力，间隔时间以每分钟 60 次，测试次数 30 万次（一次 100000 次，分 3 次完成，机械外观正常，无破裂损坏，符合规格标准，按键力：原值±20%测试完后功能正常
12	Battery cover life 电池盖插拔寿命	Pull out and insert the battery cover, 3 times per minute, 500 times. The battery cover switch is tightly closed, and the buckle is not broken or damaged 拔出并插入电池盖，每分钟 3 次，500 次，电池盖开关扣合力度正常，扣位无破裂，破损
13	Compressive strength of fuselage 机身抗压强度	Press the fuselage with a force greater than 30N for 3Min, and the fuselage and interior are free of mechanical damage, and the function is normal 用大于 30N 的力压机身 3Min，机身和内部无机械损伤,功能正常
14	Knocking machine 敲机	Test purpose: Evaluate the remote control The buckle strength of each buckle position ensures that mechanical and functional defects will not occur when users accidentally hit one end on a hard wooden desktop during normal use of the remote control. Scope of application: Suitable for remote controls and other combinations, such as hard button combinations, red mirrors, edge strips, surface and bottom shells, and other combinations. Testing method: Install the battery on the remote control, close the battery door, hold one end of the remote control, and perform a knocking test according to the following conditions: Knocking height: 200mm

		Knocking speed: 200mm/0.5 seconds. Knocking surface: 2mm thick rubber pad. Knocking frequency: 3 times/angle. Knocking angle: as shown in the right figure a) Knock on faces A, B, C, and D: from top to bottom; b) Knock E~L at 8 angles: any angle (including positive and oblique knocks) c) Knock the position of the switch Except for movable components such as doors that have opening and closing actions, it is not allowed for the buckle positions of other fixed assemblies (including the buckle positions of the surface and bottom shells) to burst/loosen, and there are no contents inside, and no hard button locking keys are allowed. Functionally normal. Battery door test: with battery test, battery door not Allow for loosening and detachment. 检测目的：评估遥控器 各扣合位的扣合强度,以保证用户正常使用遥控器过程中不小心把一端敲击在硬木板桌面上时不会出现机械和功能不良现象。 适用范围：适合遥控器以及其它组合件，例如：硬钮组合，红镜，边条，面底壳等组合件。 检测方法：遥控器装上电池，合上电池门，手持遥控器 一端，按以下条件进行敲机测试： 敲机高度：200mm 敲机速度：200mm/0.5 秒。 敲打面：2mm 厚胶垫。 敲机次数：3 次/角度。 敲机角度：如右图所示 a) 敲 A、B、C、D 4 个面：自上向下； b) 敲 E~L 8 个角：任意角度（包括正敲和斜敲） c) 敲开关的位置 除卡门等有开合动作的活动部件外，不允许其它固定组合件的扣位（包括面底壳扣位）爆开/松脱，不允许内有物，不允许硬钮卡键。功能正常。电池门测试：带电池测试，电池门不 允许松开脱落。	
15	Shaking machine 摇机	(1) Inspection purpose: To check the assembly effect of the assembly. (2) Scope of application: Suitable for remote controls and their combinations, such as battery doors, red mirrors, card doors, and other combinations. (3) Detection method: As shown in the right figure, shake the remote control in the X, Y, and Z axis directions of the assembly at a speed of more than 3 back and forth/second, with a swing amplitude of+/-5cm or more, to detect any looseness No sound, no detachment of the assembly (1) 检测目的：检查组合件的组装效果。 (2) 适用范围：适合遥控器及其组合件，例如：电池门，红镜，卡门等组合件。	

		(3) 检测方法：如右图所示,分别在组合件的 X，Y，Z 轴方向，以 3 来回/秒以上的速度，摆动幅度+/-5cm 以上摇动遥控器，检测是否有松响 没有响声,组合件不脱落
16	Drop test 光机跌落试验	Drop the finished machine (with battery) from a height of 80 cm onto the board freely, six times in total (according to the cycle of first bottom, then front, then right side, left side, upper end (transmitting tube end), and lower end). After each drop, check the function and appearance, and confirm whether the machine has abnormal sound. The broken shell is not acceptable, but the battery cover is allowed to be detached, and the buckle of the surface and bottom shell is loose but can be manually reset, which is judged as normal, and the function is normal 将成品机(装上电池）从 80 cm 高处自由跌落在木板上, 6 面（按照先底面、再正面、然后右侧面、左侧面、上端（发射管端）、下端，循环 1 次)共 6 次，每次跌落后均须检查功能与外观，并确认机身有无异响.不接受壳体破碎,但允许电池盖脱开，面底壳扣位松开但可手工复位的判定为正常，检查功能正常
17	paint adhesion test 油漆附着力测试	1. Take 3M600 tape with a length of 2 inches and a width of 0.5 inches, press it on the oil injection surface, and remove bubbles in the glue pressing area. 2. Then quickly tear the adhesive tape with a force perpendicular to the oil injection printing surface at 90 degrees No paint peeling 1、 取长 2 英寸，宽 0.5 英寸的 3M600 胶带，压在喷油面上,并清除压胶区内气泡。 2、再以与喷油面成 90 度垂直的力迅速将胶带撕起. 不得有油漆脱落的现象
18	Silk screen adhesion test 丝印附着力测试	Cover the center area of the tape on the grid and flatten it with your fingers. Then, use an eraser at the back of the pencil to flatten the tape to ensure complete contact. Tear the tape at a 45 ° angle within 1 second and stick it three times, using new tape each time. The edge of the hundred grid test line is flat The first and second silkscreen cannot be removed The third shedding screen printing area is less than 5% (when the test area is less than 100 small squares, the shedding area will be judged in the same proportion) 让胶带的中心区域覆盖在格子上并用手指推平，再用铅笔后端的橡皮擦推平胶带确保完全接触，将胶带呈 45°角 1 秒内撕起，粘撕三次，每次使用新胶带。百格测试划线边沿平整 第一 第二次 不能掉丝印 第三次脱落丝印面积小于 5%（当测试面积不够 100 个小方格，则脱落面积按同等比例判定）

Specification 规范

5. Electronic specification 电气性能规范

No. 序号	Check Item 检查项目	Description/Specification 描述/规范
1	Carrier frequency 载波频率	IR:38KHz ±0.5KHz RF: 2402-2480Mhz
2	Voltage 标准电压	DC 3.0V
3	Standby current 待机电流	≤3mA Standby average current 待机平均电流≤100uA
4	Sleep current 睡眠电流	≤20uA(Monomer differences are related to G-Sensors) （单体差异跟 G-Sensor 有关）
5	Operation current 工作电流	Infrared rated working current: ≤ 35mA for long time ,≤ 50mA for short time (NEC format) Rated working current of Bluetooth: Bluetooth button ≤ 5mA Voice ≤ 10mA 红外额定工作电流：长按≤35mA 短按≤50mA（NEC 格式） 蓝牙额定工作电流：蓝牙按键≤5mA 语音≤10mA
6	Function 功能	Refer to 《user manual》参考用户手册
7	Distance and angle 发射距离和角度	IR: 1. Straight line distance≥10m 直线>10m 2.RC side：30°（left and right）≥8m （左右夹角）30°≥8m Refer to the below drawing 参考下图 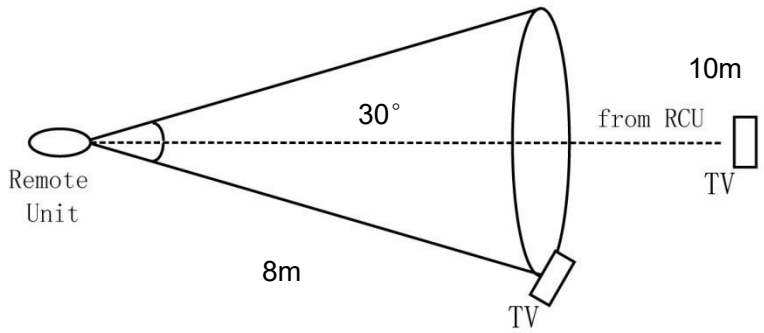 RF: 1. Key distance ≥ 15m Voice distance ≥ 10m 按键距离≥15m 语音距离≥10m

	Irradiance 辐照度	The middle line is greater than 40 uw/cm squared Left/right included angle 30 ° ≥ 20 μ w/cm ² 中间直线大于 40 uw/cm²,左/右夹角 30°≥20μw/cm²
	Remark: 1.Temp:25℃ Humidity: 65%RH 2.Power Voltage: ≥3.0V 3.Receiver is the standard decoding instrument of our company 备注:1.温度:25 度，湿度:65% rh。2.电源电压:> 3.0 v。3.接收机是我公司的标准解码器	

6.Transport and storage conditions 运输和储存条件

The packaging of remote control should avoid rain, snow or strong pressure during shipment.
The remote control should be stored undertemperature of -10 ℃ ~ +55℃, relative humidity cannot exceed 80%, and also cannot be put in strong magnetic fields and harmful air, or close to corrosive substances.
遥控器的包装和运输的环境温度为-10℃～+55℃，相对湿度不大于 80%，周围没有强磁场、腐蚀物质和其它有害气体

，

Specification 规范

7. **Reliability testing** 可靠性测试

No. 序号	Check Item 检查项	Test condition 测试条件	Judgment 附　注
1	Low temperature Test 低温贮存	Set the test chamber at -20℃, and place the functional products (without battery or power supply) in the test chamber for 96 hours.Test product function after 1 hour at room temperature 将试验箱设置为-20℃，将功能产品（不带电池或者电源）放置于试验箱内96小时。在室温放置1小时后测试产品功能	No functional failures and no parts should suffer damage. 不允许出现电子、结构或者功能的失败
2	High temperature Test 高温贮存	Set the test chamber at 60℃, and place the functional products (without battery or power supply) in the test chamber for 96 hours.Test product function after 1 hour at room temperature 将试验箱设置为 60℃，将功能产品（不带电池或者电源）放置于试验箱内 96 小时。在室温放置 1 小时后测试产品功能	No functional failures and no parts should suffer damage. 不允许出现电子、结构或者功能的失败
3	High temperature and humidity experiment 高温高湿实验	Put the finished machine in an environment with temperature of 60 ± 2 ℃ and humidity of 95% for 96 hours and room temperature for 1 hour 将成品机置于温度 60±2℃，湿度 95%环境中 96 小时，室温 1 小时后，全检	No functional failures and no parts should suffer damage. 不允许出现电子、结构或者功能的失败
4	Temperature compression test 温度压缩试验	Put the sample with the battery in the temperature of - 20 ℃ for 2h, and then put it in the temperature furnace of 40 ℃. After 3 minutes, test the sample function, and put it in the temperature of 40 ℃ for 1h. It will take more than 3 cycles in total 将装好电池的样品放入-20℃温度下 2H，再转入 40℃ 温度炉中， 3 分钟后测试样品功能，并放入 40℃温度中 1H，总共需要做 3 次以上循环	No functional failures and no parts should suffer damage. 不允许出现电子、结构或者功能的失败
5	Salt spray test 盐雾测试	Put the remote control into a salt spray test chamber with a temperature of 35 ℃, a pressure bucket of 47 ℃, a set	Metal parts shall not rust 金属部件不得生锈

<table>
<tr><td></td><td></td><td>pressure of 1 kg/cm, and a salt water concentration of 5%. After 24 hours, conduct full inspection
将遥控器上放入温度为 35℃，压力桶：47℃，设置压力为 1kg/cm，盐水浓度为 5%的盐雾试验箱中，时间 24H 后，全检</td><td></td></tr>
<tr><td>6</td><td>Drop test
跌落测试</td><td>Put the remote control into the packaging box, and drop it onto the hard board twice from one corner, three sides and six sides. The drop height is shown in the figure
遥控器放入包装箱内，分别从一个角，三条边，六个面，自然跌落到硬质木板上2次。跌落高度如图
<table>
<tr><td colspan="2">重量</td><td colspan="2">自由落下高度</td></tr>
<tr><td>1-20.99 磅</td><td>0.45-9.52Kg</td><td>30 in.</td><td>760mm</td></tr>
<tr><td>21-40.99 磅</td><td>9.53-18.59 Kg</td><td>24 in.</td><td>610 mm</td></tr>
<tr><td>41-60.99 磅</td><td>18.62-27.66 Kg</td><td>18 in.</td><td>460 mm</td></tr>
<tr><td>61-100 磅</td><td>27.67-45.36 Kg</td><td>12 in.</td><td>310 mm</td></tr>
<tr><td colspan="2">单个包装</td><td>32 in.</td><td>810mm</td></tr>
</table></td><td>Electrical and mechanical properties meet the initial specifications
电气及机械特性性能符合初始规格要求</td></tr>
<tr><td>7</td><td>Vibration test
震动测试</td><td>The remote controller is packed in the packing box, and the vibration frequency is 10-55-10Hz/min, the amplitude is 1.5mm, and the vibration is 2H in the X, Y and Z directions respectively
遥控器装入包装箱内，振动频率 10-55-10Hz/分钟，振幅：1.5mm, 分别 X、Y、Z 三方向各振动 2H</td><td>Electrical and mechanical properties meet the initial specifications
电气及机械特性性能符合初始规格要求</td></tr>
</table>

Remote control appearance外观图

Remark:
We'll make mass production according to approved sample.
备注: 承认后一切色泽、字体及字符依承认的样品为准;

Product function description功能说明

1、Function Introduction 功能简介

Bluetooth buttons, Google Voice, infrared, G-sensor, backlight, buzzer, support for Findme function.
蓝牙按键、谷歌语音、红外、G-sensor、背光灯、蜂鸣器，支持 Findme 功能。

2、hardware component 硬件部分

IC/主控芯片：TLSR8251F512ET48
pilot lamp/指示灯：Large screen Key backlight as indicator 按键背光灯做指示灯
Backlight/背光灯： white LED *4
IR/发射管：*1
Antenna type/天线形式：PCB on-board antenna /PCB 板载天线
Sensor/传感器：ICM-42670-P
Buzzer/蜂鸣器：JBE8540X-0327-16RS

3、Functional requirements 功能要求

major function 主要功能：

- The IMU function is required. The IMU needs to save power and minimize power consumption
- Support OK+BACK/DOWN+BACK key combination reporting function
- Use private voice
- SmartRCU and manual infrared learning are not supported
- Support remote control power reading service
- The hardware needs to support infrared emission, mainly reserving the subsequent need to support infrared emission when Bluetooth is disconnected
- Infrared when Bluetooth is disconnected
- 需要 IMU 功能，IMU 需要做到省电效果，功耗尽量做到最小
- 支持 OK+BACK/DOWN+BACK 组合键上报功能
- 使用私有语音
- 不支持 SmartRCU 和手动红外学习功能
- 支持遥控器电量读取服务
- 硬件上需要支持红外发射，主要预留后续需要支持蓝牙断连时发红外的需求
- 蓝牙断连情况下发红外

Backlight 背光灯:

- Corresponding backlight when large screen is pressed
- The corresponding backlight is on when the small screen is pressed
- Large screen 按下时对应背光亮
- Small screen 按下时对应背光亮

other 其它:

- The usage ID of customized application keys ranges from 0x0200 to 0x0210
- The maximum value of key value cannot exceed 0x028c
- 客户定制应用按键的 Usage ID 从 0x0200~~0x0210
- 键值最大值不能超过 0x028c

4、Functional requirements 功能要求

1. Pair and connect back 配对和回连

Step 步骤	operation 操作
Enter pairing mode 进入配对模式	Case 1: press and hold "HOME+BACK" for 3 seconds at the same time, clear the pairing information, and then send the pairing broadcast to enter the pairing mode. The pairing timeout of this pairing scenario is 60 seconds; Case 2: When the remote control has no pairing information, press any key to enter the pairing mode (except Smart IR key), and the pairing timeout for this pairing scenario is 180s; Case 3: When the remote control has no pairing information, it will enter the pairing mode when it is powered on. The pairing timeout for this pairing scenario is 180s. 情况一：同时按住“HOME+BACK”3 秒，清空配对信息，然后发送配对广播进入配对模式，此配对场景的配对超时时间为 60s； 情况二：遥控器无配对信息时，按任意按键进入配对模式（Smart IR 键除外），此配对场景的配对超时时间为 180s； 情况三：遥控器无配对信息时，上电就进入配对模式，此配对场景的配对超时时间为 180s。
General function indicator (Large screen key backlight) 通用功能指示灯（Large screen 按键背光灯）	1: Enter the pairing mode, and the backlight flashes quickly (100ms on and 100ms off); 2: The backlight is always on for 3s and then off; 3: The remote control is not connected. When the button is pressed, the backlight will flash slowly (250ms on and 250ms off), and then go out after flashing for 6 times; 4: When the battery power of the remote controller is low, when the button is pressed, the backlight will flash slowly (500ms on and 500ms off), and then go out after flashing three times; 1：进入配对模式，背光灯快速闪烁（100ms 亮 100ms 灭）； 2：配对成功背光灯常亮 3s 后熄灭； 3：遥控器未连接状态，当按下按键，背光灯慢闪（250ms 亮 250ms 灭），闪亮 6 次后熄灭； 4：遥控器电池电量不足时，当按下按键，背光灯慢闪（500ms 亮 500ms 灭），闪亮 3 次后熄灭；
Bluetooth device name 蓝牙设备名	BR38A
Reconnection 回连	1: The remote controller will automatically send back the connection broadcast packet in the case of abnormal disconnection (except the case where the host actively sends the disconnection), with a timeout of 15s; 2: In the case of disconnection, press the key to send a 15s non-directed broadcast packet. During the broadcast process, the scan request of all devices is supported. The scan response does not contain the device name, but only supports the connect request of the devices in the white list; 1：遥控器在异常断连情况下（host 主动发断连接的情况除外），自动发回连广播包，超时时间 15s； 2：断连情况下，按键发送 15s 非定向广播包，广播过程中支持回复所有设备的 scan request，scan response 要不包含设备名,但仅支持白名单中设备的 connect request；
Start broadcasting 开机广播	Support startup broadcast The customer is required to provide the definition of Bluetooth power-on broadcast

	支持开机广播 需要客户提供蓝牙开机广播的定义

2. Key function 按键功能

1) Key name and key value are as follows 按键名与键值如下

键序	按键功能	Usage page	Usage ID	IR code:NEC 用户码：0x02FE	Note
S1	Power	0x0C	0x0030	0x00	
S2	信源	0x0C	0x01bb	0x60	
S3	Assistation	0x0C	0x0221	0x58	
S4	Back	0x0C	0x0224	0x19	
S6	Large screen	0x0C	0x007A	0x56	
S5	Home	0x0C	0x0223	0x5C	
S7	Up	0x0C	0x0042	0x59	
S9	Left	0x0C	0x0044	0x54	
S11	Center/OK	0x0C	0x0041	0x55	
S10	Right	0x0C	0x0045	0x15	
S8	Down	0x0C	0x0043	0x51	
S13	A	0x0C	0x00e5	0x61	
S12	Small screen	0x0C	0x0079	0x57	
S14	B	0x0C	0x0203	0x62	
S15	Mute	0x0C	0x00e2	0x41	
S16	VOL+	0x0C	0x00e9	0x48	
S18	Menu	0x0C	0x0040	0x23	
S17	VOL-	0x0C	0x00ea	0x0B	
	BACK+OK	0x0c 0x0224 & 0x0c 0x0041			
	BACK+DOWN	0x0c 0x0224 & 0x0c 0x0043			
	OK+BACK	0x0c 0x0041 & 0x0c 0x0224			
	DOWN+BACK	0x0c 0x0043 & 0x0c 0x0224			

3. Google ATV voice function 谷歌 ATV 语音功能

1) Compliant with USB HID AUDIO standard protocol

2) Speech sampling rate: 16K/16BIT, speech encoding format PCM bitstream.
3) Press and hold the voice button to turn on voice. After turning on local voice, release the voice button or receive a command from the host to turn off voice (08 06 00), and the remote control will exit voice.
1)遵从 USB HID AUDIO 标准协议
2)语音采样率：16K/16BIT,语音编码格式 PCM 码流。
3) 按住语音键开启语音，开启本地语音后，松开语音键或接收到主机关闭语音（08 06 00）的命令，遥控器退出语音。

4. G-sensor wake-up backlight function G-sensor 唤醒背光功能

Shake the remote control to wake up the backlight, send commands to the host, and the host controls the backlight to light up.

晃动遥控器就唤醒背光灯，遥控器发指令给主机，主机控制背光灯亮。

5. Findme function Findme 功能

1) Findme UUID
Main Service UUID: 0000AA0-3C17-D293-8E48-14FE2E4DA212
Characteristic UUID: 000B002-0000-1000-8000-00805F9B34FB
2) The findme function allows for custom hid reports. By writing a byte to the remote control through APK, the buzzer will continue to sound for 30 seconds. Press any key to exit.
3) Sending data 0x01 activates the findme function, and the buzzer emits beeps Sound.
4) Send data 0x02 to disable the findme function.

1)Findme UUID（同感臻 SSU 功能通用 uuid）
主服务 UUID：00000AA0-3C17-D293-8E48-14FE2E4DA212
特征 UUID： 0000B002-0000-1000-8000-00805F9B34FB

主机向遥控器发送开启与关闭 find me 指令，通过写属性写入，命令格式：

命令字	功能类型

命令字(1Byte): 0xC1
功能类型(1Byte):

开启 find me	0x01
取消 find me	0x02

2)findme 功能自定义 hid report ，通过 apk 写一个字节到遥控器，蜂鸣器就持续响 30 秒，按任意键可退出。
3)发数据 0x01 即开启 findme 功能，蜂鸣器发出滴滴滴...声音。
4)发数据 0x02 即关闭 findme 功能。

6. Low power consumption mode 低功耗模式

Status 状态	mode 方式
No pairing information 无配对信息	Press any key to enter the pairing mode 任意按键进入配对模式
With pairing information, no connection 有配对信息，无连接	Press the key to send a 15-second return broadcast 按键发送 15 秒回连广播
With link →no connection 有链接→无连接	When the host disconnects the link actively, the remote control directly enters sleep When the non-host is disconnected actively, the remote control will send a 15-second back-connection broadcast

	主机主动断开链接时，遥控器直接进入休眠 非主机主动断开连接时，遥控器发 15 秒回连广播
Connected 有连接	Enter standby mode after completing the key operation 按键操作完成进入待机状态

7. 电源管理

Power supply mode 供电方式	AAA*2 2 节 AAA 7 号干电池
Low voltage 低电	VBAT≤2.3V±0.2V
Serious power shortage 严重缺电	VBAT≤2V，Prohibit work VBAT≤2V，禁止工作
Power acquisition 电量获取	Support the normal power reading service for the host side to read the battery power of the remote controller. 支持正常的电量读取服务，供 Host 端读取遥控器电池电量。

Electricity service 电量服务:

Battery Voltage(V) **电池电压（V）**	**Percentage(%)** **百分比(%)**	**Remark** **备注**
＞3.1	100	Range mode: Vmin<=V<Vmax 范围模式：Vmin<=V<Vmax
3.0~3.1	90	
2.9~3.0	80	
2.8~2.9	70	
2.7~2.8	60	
2.6~2.7	50	
2.5~2.6	40	
2.4~2.5	30	
2.3~2.4	20	
2.2~2.3	10	V ≤ 2.3V, with each button operation, the indicator light flashes slowly (once every 1 second), flashes three times, and then goes out V≤2.3V，每次按键操作，指示灯慢闪 （1 秒闪亮 1 次），闪亮 3 次后熄灭
Shutdown voltage 关机电压	0	When the voltage is ≤ 2.0 ± 0.1V, the chip enters the protection state and does not send back broadcast or infrared code value 电压≤2.0±0.1V 时，芯片进入保护状态，不发送回连广播不发送红外码值

8. The remote control supports ota (online) upgrade

遥控器支持 ota（在线）升级

In order to adapt to new requirements or changes, the remote controller needs to support ota upgrade. The upgrade package is sent to the Bluetooth remote controller through the box end.
为了适应新的需求或变更，遥控器需要支持 ota 升级。升级包通过盒子端发送给蓝牙遥控器。

9. Description of indicator light 指示灯说明

No connection button 无连接按键	The indicator light slowly flashes 6 times and then goes out (250ms on and 250ms off) 指示灯慢速闪烁 6 次后熄灭（250ms 亮 250ms 灭）
Pair 配对	The pilot lamp light flashes rapidly during pairing (100ms on and 100ms off) The indicator light of successful pairing is always on for 3s and then off The pairing fails, and the indicator flashes for 60s and then goes out. 配对过程指示灯快速闪烁（100ms 亮 100ms 灭） 配对成功配对成功指示灯常亮 3s 后熄灭 配对失败，指示灯闪烁 60s 后熄灭。
Connected 有连接	The indicator light is not on 指示灯不亮
Reconnection 回连	The successful reconnection indicator light flashes quickly once, stays on for 3 seconds, and then goes off 回连成功指示灯快闪 1 次，常亮 3s 后熄灭
Low voltage 低电	The indicator light flashes slowly for 3 times and then goes out (500ms on and 500ms off) 指示灯慢速闪烁 3 次后熄灭（500ms 亮 500ms 灭）
Serious power shortage 严重缺电	Stop working (no prompt), and normal operation can be resumed after the power is restored. 停止工作（无提示），电量恢复后可以恢复正常工作。
Priority 优先级	Pairing>Low power>No connection button>Link 配对 > 低电 > 无连接按键 > 有链接
Backlight 背光灯	It only lights up in pairing mode, and in other cases, it is controlled by the host. 只有配对模式的时候亮，其他情况是主机控制。

Remote control Dimensions
产品尺寸图

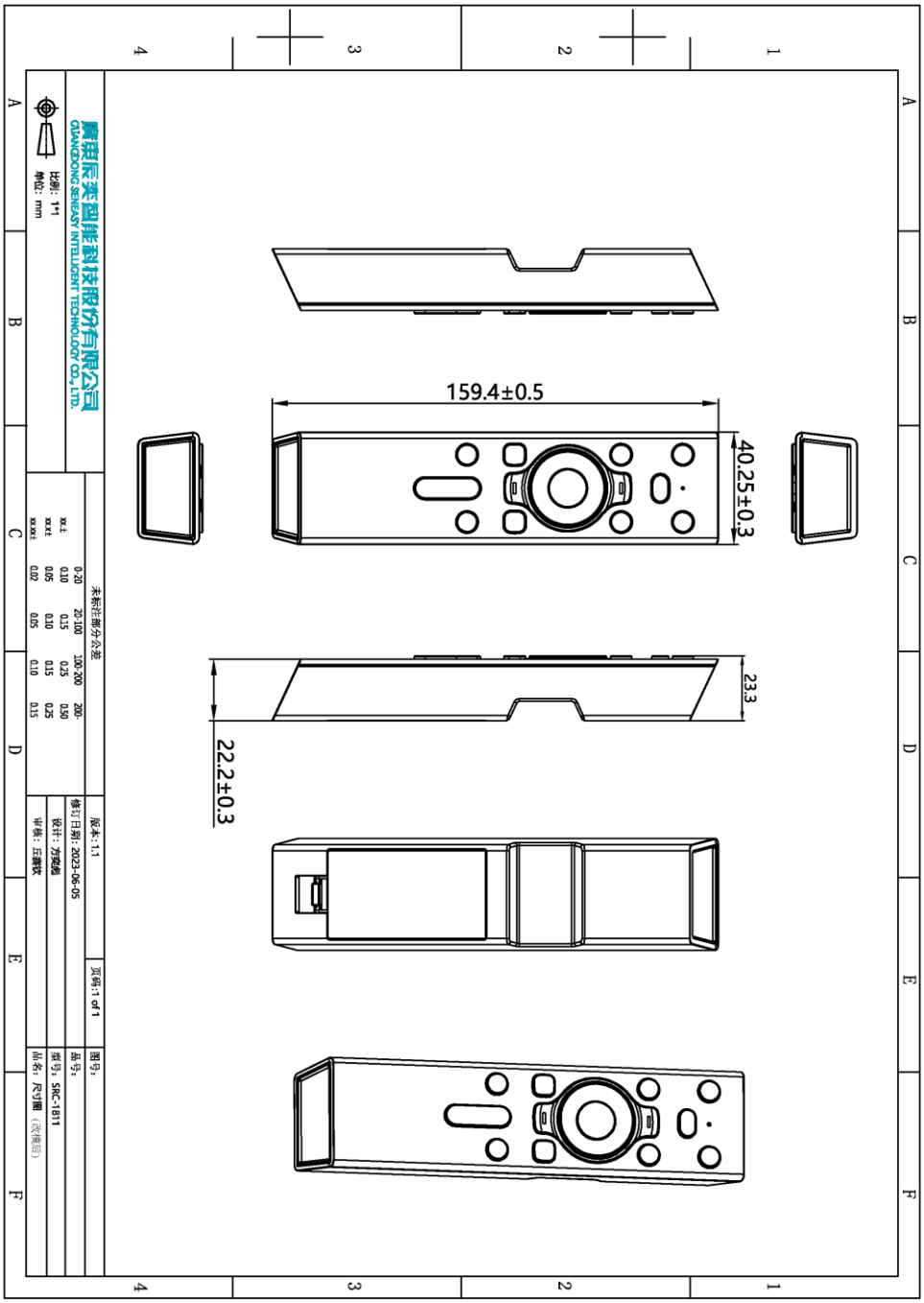

Packing drawing
包装图

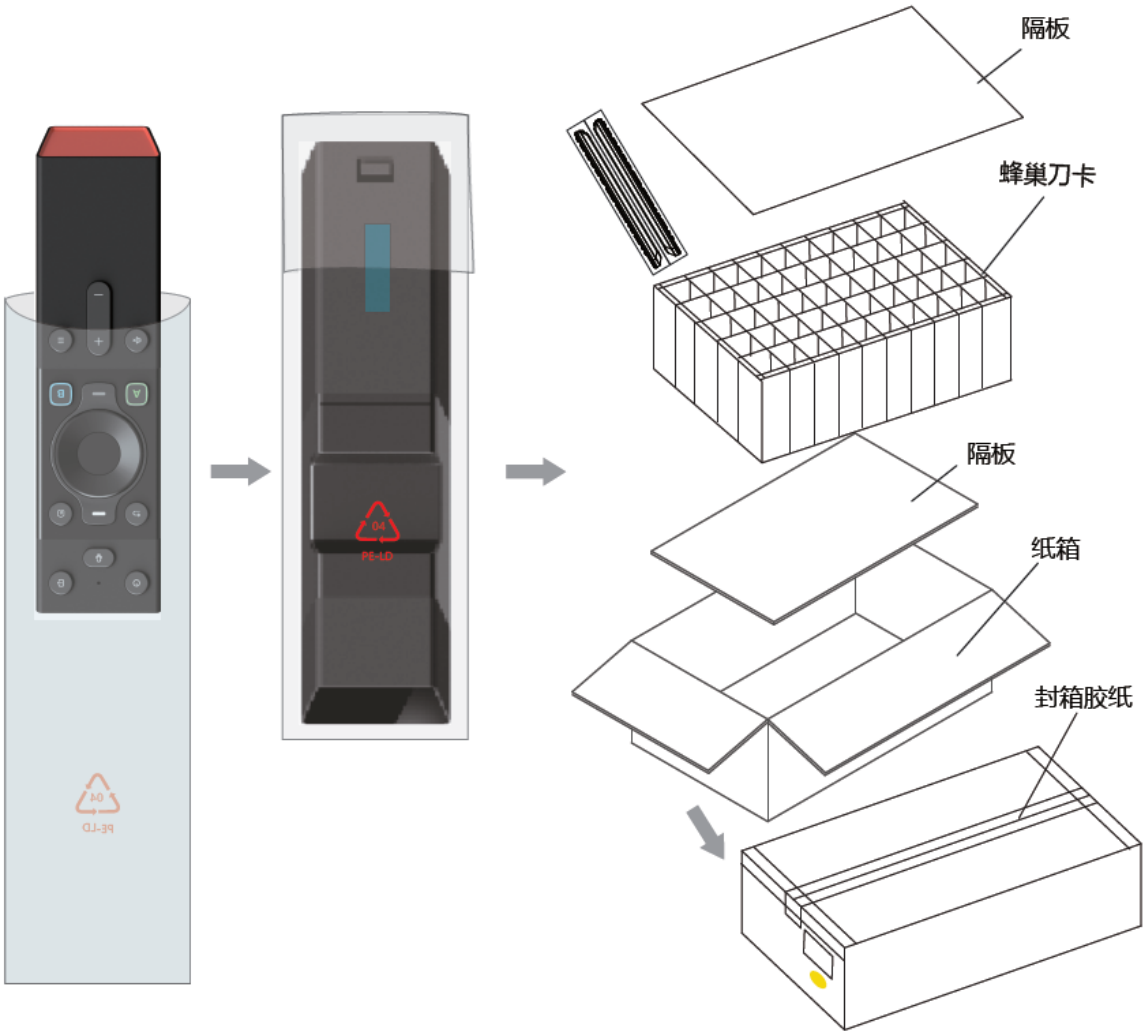

FCC STATEMENT

1. This device complies with Part 15 of the FCC Rules. Operation is subject to the following two conditions:
(1) This device may not cause harmful interference, and (2) This device must accept any interference received, including interference that may cause undesired operation.
2. any Changes or modifications not expressly approved by the party responsible for compliance could void the user's authority to operate the equipment.

NOTE: This equipment has been tested and found to comply with the limits for a Class B digital device, pursuant to Part 15 of the FCC Rules.
These limits are designed to provide reasonable protection against harmful interference in a residential installation.
This equipment generates uses and can radiate radio frequency energy and, if not installed and used in accordance with the instructions, may cause harmful interference to radio communications. However, there is no guarantee that interference will not occur in a particular installation.
If this equipment does cause harmful interference to radio or television reception, which can be determined by turning the equipment off and on, the user is encouraged to try to correct the interference by one or more of the following measures:
Reorient or relocate the receiving antenna. Increase the separation between the equipment and receiver. Connect the equipment into an outlet on a circuit different from that to which the receiver is connected. Consult the dealer or an experienced radio/TV technician for help.

FCC Radiation Exposure Statement

This equipment complies with FCC radiation exposure limits set forth for an uncontrolled environment.