DC FAST CHARGER

Model:

UEVD-F60-C-ab

UEVD-F120-CC-ab	**UEVD-F120-CM-ab**
UEVD-F150-CC-ab	**UEVD-F150-CM-ab**
UEVD-F180-CC-ab	**UEVD-F180-CM-ab**
UEVD-F240-CC-ab	**UEVD-F240-CM-ab**
UEVD-F300-CC-ab	**UEVD-F300-CM-ab**
UEVD-F350-CC-ab	**UEVD-F350-CM-ab**

READ AND SAVE THESE INSTRUCTIONS
Installer: Leave this manual with the homeowner

TABLE OF CONTENTS

SAFETY INSTRUCTIONS 2

USER INSTRUCTIONS 4

PARAMETERS SHEET 4

INDICATOR LIGHT 5

PRODUCT DESCRIPTION 5

INSTALLATION INSTRUCTIONS 6

GROUNDING INSTRUCTIONS 6

TOOLS/MATERIALS REQUIRED 6

ATTACHMENT 7

INSTALLATION CONDITIONS 7

INSTALLATION 7

AC INPUT WIRING CABLES CHOOSE 10

CONNECT ELECTRICAL WIRING 11

START UP 12

SWITCH ON 12

OCPP 1.6J NETWORK CONNECTION 13

OPERATING INSTRUCTION 14

MAINTENANCE 21

TROUBLESHOOTING 22

SAFETY INSTRUCTIONS

Important note: Please read this booklet before installing and switching on this appliance. The manufacturer assumes no responsibility for incorrect installation and usage as described in this booklet. Keep the instruction book for future reference. All the information in the manual is valid for the charging station model in this manual.

It is necessary to comply with relevant national safety regulations and strictly follow the precautions and special safety instructions provided for the relevant equipment during various operation processes of the unit.

This instruction book details the install guidance for the charger. If you're unsure which model you have, please check the rating label on the charger.

The unit is designed for installations inside or outside, with the Innovative safety systems we have built into the charger ensuring its safe usage. This guidance provides information to assist when installing the unit. The charger must be professionally installed by a qualified electrician according to local and national regulations applicable at the time of installation and used in accordance with the manufacturer's instructions.

● This unit must be grounded (Earthed).
● To avoid a risk of fire or electric shock, do not use this device with an extension cord.
● The suitability of the use of flexiblecord in accordance with ce code, part i,rule4-012,is to be determined by thelocal inspection authority having jurisdiction.
● To reduce the risk of electric shock,connect only to properly grounded outlets.
● Do not use this product if there is any damage to the unit.
● Risk of electric shock. Do not remove cover or attempt to open the enclosure.
No user serviceable parts inside. Refer servicing to qualified service personnel.
● Make sure that the cable label is correct before the connection of cables.
● For use with Electric Vehicles.
● Ventilation Required.
● Insulated tools must be used.
● This unit is only to be installed by a qualified qualified to work with high DC voltage up to 1000Vdc and 3 phase AC voltage up to 500Vac.It is necessary to comply with relevant National S afety R egulations during installation of the DC Charger.
● This unit is designed to connect a electrical supply voltage of 480V a.c 60Hz for three-phase series.
● The charger must be installed on a secure solid surface that can support the weight of the charger. Failure to install on a secure surface or not in accordance with electrical regulations could lead to death, personal injury, or property damage.
● This appliance is designed to be used by adults, do not allow children to play with the appliance or let them hang over the charger.
● The wiring area and the area where the line passes through for AC cables must comply with national regulations and norms. Only personnel who are qualified to work with high DC and AC voltages are allowed to install and maintain the DC Charger.
● Do not use this unit other than its intended purpose.
● Do not use if the socket or connector or cable is damaged.
● Disconnect the charging from the vehicle prior to driving off.
● To prevent electrical shock, do not plug-in or un-plug with wet hands .
● Do not use a power washer to clean or wash the car charger.
● It is recommended not to use in a location that can be reached by rain, suggest increase rain protection measures.

SAFETY INSTRUCTIONS

● The charger must be protected from strong vibration or exposure to high temperature and humidity.
● The ventilation shutters shall not be covered to ensure ventilation and heat dissipation.
● During the handling of equipment by hand, it is necessary to wear protective gloves.
● Do not put fingers into the socket or connector.
● Operation, it is strictly forbidden to short-circuit the positive and negative of the DC Charger DC distribution or short-circuit any DC distribution polarity to Ground. The DC Charger is a high voltage DC power supply, and short circuit may cause damage to the DC Charger and personal safety hazards.
● Working with the High Voltage DC output , it is necessary to strictly check the polarity of cables and interface terminals.
● Before starting any installation work, attention should be paid to planning cable routing, etc.
● Adaptors or conversion adapters are not allowed to be used.
● The cord extension sets are not allowed to be used.
● This unit is not suitable for use in dangerous places where there is high amounts of dust, dangerous gas or in an explosive and flammable environment.
● In order to ensure the electrical safety of the unit, the product body shell must be fixed to the correct position with fasteners that come with the product and the seals used to ensure the IP rating is maintained.
● After the fuse in the circuit is blown, it must be replaced according to the required specifications, and it is not allowed to replace it with a wire.
● It is forbidden to charge non rechargeable batteries.
● It is forbidden to non professional personnel to enter the operation room and operate the unit.
● It is strictly prohibited to wear watches,rings,bracelets and other conductive objects on the wrist during installation and maintenance.
● The unit’s inlet position must be tightly sealed to be waterproof and dustproof to ensure the products sealing level.
● Do not install in areas of high-risk chance of impact by vehicles or a high risk of trip hazard.

Important: Under no circumstances will compliance with the information in this manual relieve the user of his/her responsibility to comply with all applicable codes or safety standards.

USER INSTRUCTIONS

PARAMETERS SHEET

Item	Model	UEVD-F60-CC	UEVD-F120-CC UEVD-F120-CM	UEVD-F150-CC UEVD-F150-CM	UEVD-F180-CC UEVD-F180-CM	UEVD-F240-CC UEVD-F240-CM	UEVD-F300-CC UEVD-F300-CM	UEVD-F350-CC UEVD-F350-CM
Input	Power Supply	3P+N+PE						
	Rated Voltage	480V a.c 60Hz						
	Rated current	80A	155A	194A	233A	310A	388A	466A
Output	Output Voltage	200-1000V DC						
	Maximum Current	200A						
	Rated Power	60kW	120kW	150kW	180kW	240kW	300kW	350kW
Configuration	Charger connector	Connector+ 6M cable						
	Material	Galvanized sheet powder spraying						
	Colour	white, gray						
	Indicator light	Three colour LED						
	Start Mode	OCPP1.6J						
Safety	Protection degree	NEMA 3R						
	Protection	Over voltage protection						
		Under voltage protection						
		Surge protection						
		Over load protection						
		Short circuit protection						
		Earth leakage protection						
		Over-temp protection						
	Certification	ETL,UL2231-1-2 , UL 2202 CSA C22.2#281.2:2021 Ed.1+U1;U2; U3CSA C22.2#280						
Power consumption	Standby power consumption	<30W						
Enviroment	Installation	Floor mounted						
	Work Temperature	-25°C~50°C						
	Work Humidity	5%-95% non-condensing						
	Work Altitude	<2000m						
Package	Product Dimension (H*W*D)	60-300kW series:1850×850×840 (mm) 350kW series:1850×850×928 (mm)						

Note 1: The DC Charger provides full output power up to 50°C, output power derating above 50°C, Stop output up to 75°C.

Note 2: The protection level of the DC Charger is 3R. But for charging safety it should not be used during rain or snow if water can reach the charger connector.

USER INSTRUCTIONS

· The DC Charger is able to fast charge all electric vehicles compliant with CCS1 charging system .
· Which specially designed for Floor mounted,3R level of protection, sturdy and durable for outdoor applications.
· Depending on the battery capacity, output power 60-350KW output volt age from 200V to 1000V.
· The battery charging state is displayed on the lcd screen and the charging cycle finishes by itself or can be interrupted by user command.
· User friendly and safe. After user identification, it only requires coupling the charger's output plug in the EV for automatic starting if all safety features are accomplished.
· Full safety function with output contactor and fuse SPD leakage switch insulation detector software logic for multiple protection.
· 3G/4G support, RFID authorization and OCPP.

INDICATOR LIGHT

Blue light glowing : Standby
Green light glowing : Connection confirmation
Green light flashing : Charging
Red light glowing : Fault

PRODUCT PARTS PRESENTATION

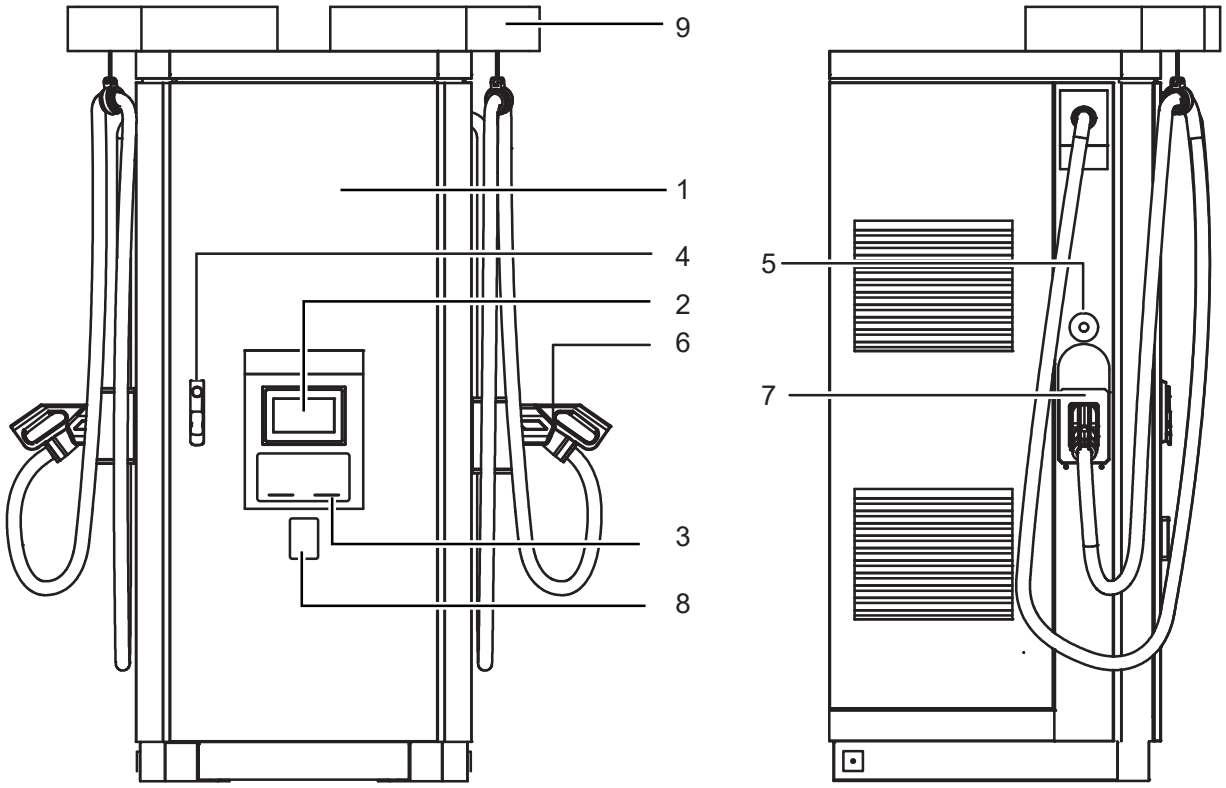

1. Front cover
2. LCD display
3. Indicator light
4. Gate lock
5. Emergency stop button
6. Charging lead and connector
7. Cable holder
8. Payter
9. Cable holder (Optional)

INSTALLATION

Since the working voltage inside the charging system is very high and the current is very large, the following rules should always be observed to ensure personal safety.
·Only personnel who have received the training of the charging system and fully mastered the knowledge of the charging system can install the charging system. During installation, always observe the safety precautions mentioned in this document and all relevant National Safety Regulations.

GROUNDING INSTRUCTIONS

An equipment grounding conductor or a grounded, metal, and permanent wiring system is required for the charger connection. This should be run with circuit conductors and connected to the equipment grounding bar or lead on the charger.

UNPACKING AND VISUAL INSPECTION

· Check if the exterior packaging has been damaged by mechanical impacts or any accidents during transportation.
· If applicable, check if the exterior panels of the charger are in perfect condition.
· Check if the interior of the DC Charger is clean.
· Check if the door of the DC Charger is working properly.
· Check for proper DC Charger protective ground connection point, which should be interconnected with the low voltage switchboard ground connection during the installation.

Assembly/placing instructions
Anchoring to the concrete foundation.

TOOLS / MATERIALS REQUIRED (NOT INCLUDE)

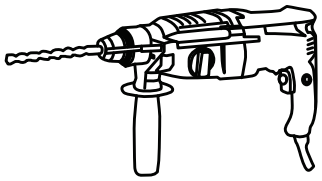
Hammerdrill

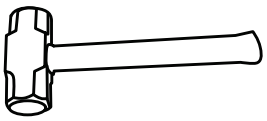
Hammer

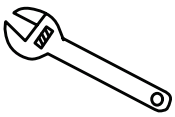
Wrench

Safety gloves

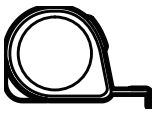
Measuring tape

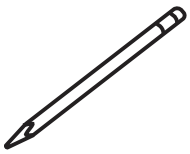
Pencil

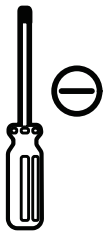
Slotted screwdriver

Phillips screwdriver

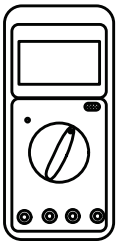
Multimeter

INSTALLATION

ATTACHMENT

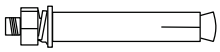

5-M10 expansion screw

2-M8x25 Grounding bolt

2-M8 Spring washer

2-M8 washer

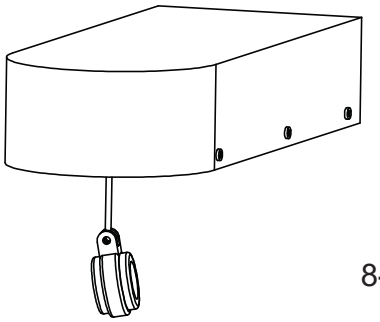

2 x Cable holder

8-M10 nut

8-M10 Spring washer

8-M10 flat washer

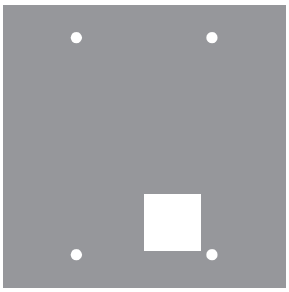

1 x Installation template

INSTALLATION CONDITIONS

1. No less than 1M working space should be left around the pile installation.
2. The charging pile must be installed on the customized concrete cement foundation;
3. The base must be at least 200mm above the ground and tilt vertically
Not more than 5% of the installed volume.
4. The charging pile has a reliable grounding connection with the cement foundation.

INSTALLATION

1. First, construct the concrete installation foundation according to the drawing, and reserve no less than 200mm×200mm holes on the foundation for wire entry holes. With the template according to 4-Φ 14 position, drill 4-Φ14 hole depth of 60mm, after drilling the hole debris clean.
2. Insert the M10 expansion screw with nut and assembly in the direction shown. Hammer it down, taking care not to damage the thread; After fastening the nut kit, remove the nut, spring washer, and flat washer.
3. Remove the front and rear baffles of the machine, insert them into the bottom of the charging pile with forklift, and slowly move them inward. After forklift, place them on the M10 bolts that are pre-tightened and fixed, pass the inlet wire through the inlet hole, and fix them firmly with four M10 nuts, spring washers and flat washers.
4. Install the front and rear baffles.

INSTALLATION

60-300kW series

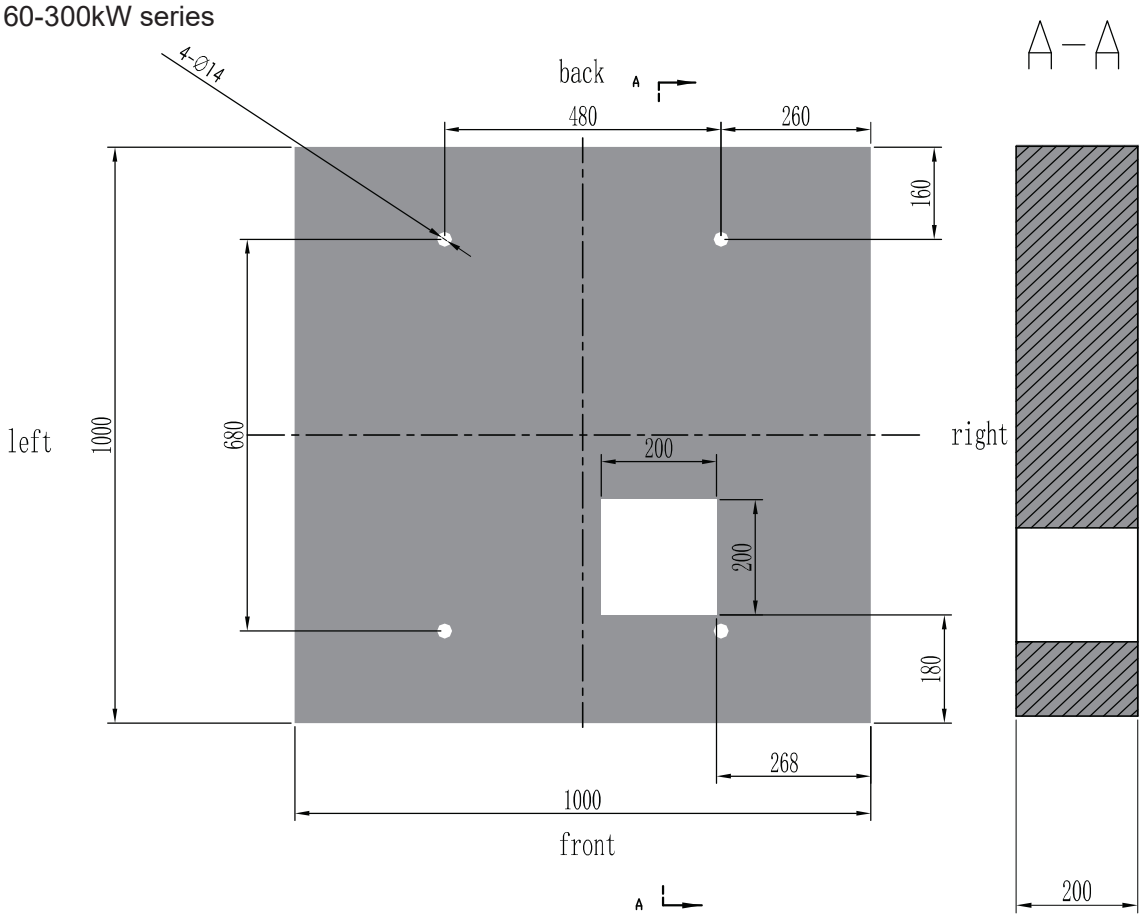

350kW series

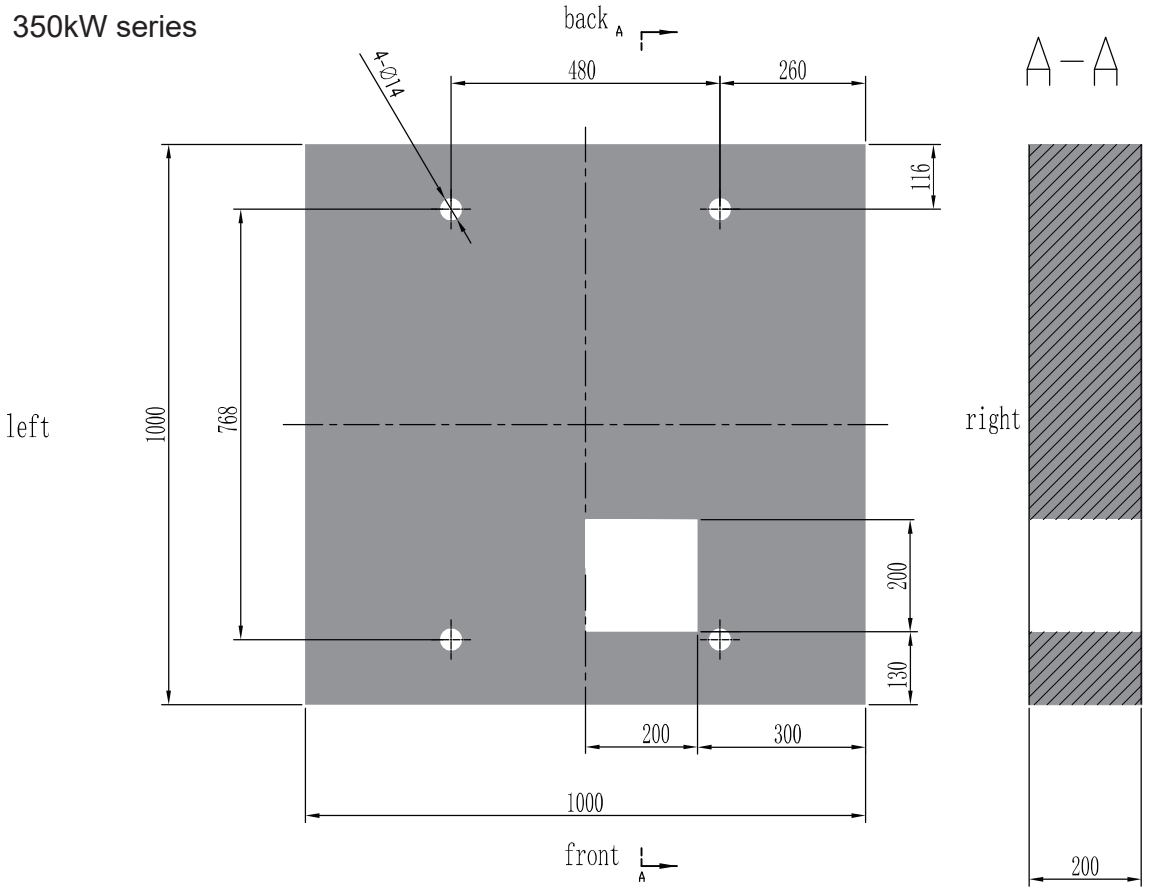

INSTALLATION

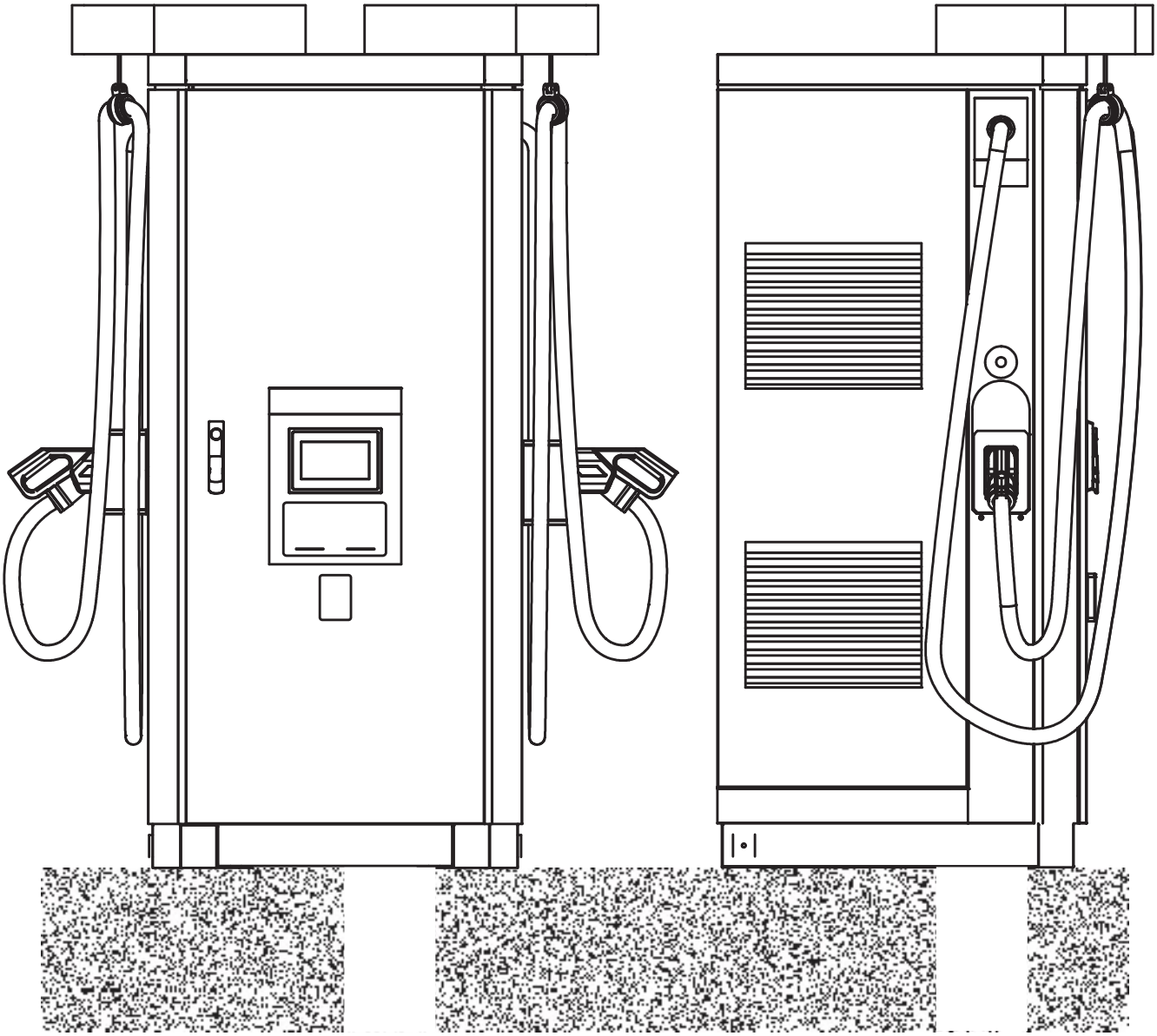

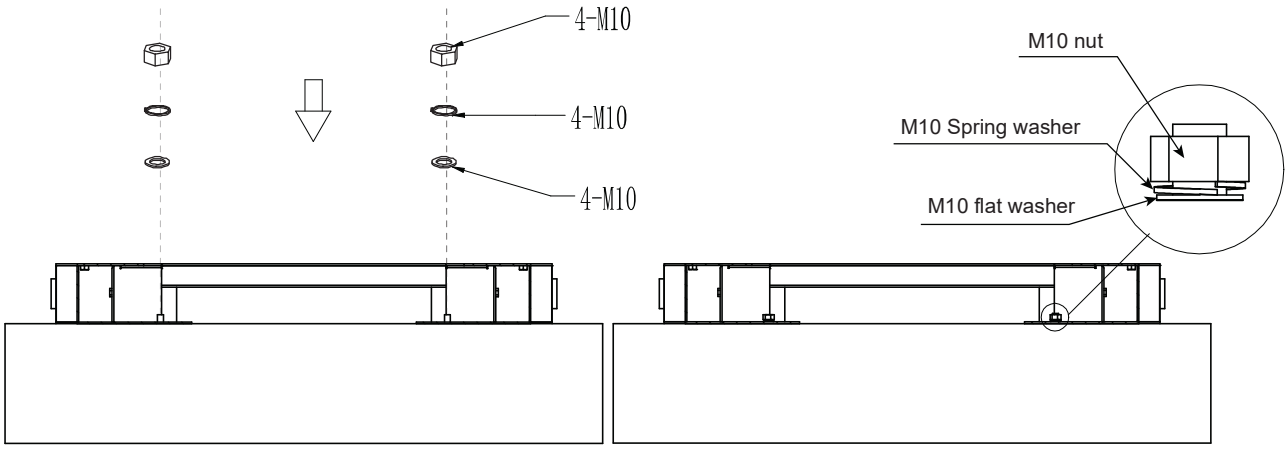

INSTALLATION

INSTALLATION OF THE CABLE HOLDER

1.Remove the screws thena open the cover of the cable holder.Keep the screws and fixing bracket for subsequent use.
2.Install the cable holder base on the screw column above the unit, and use a flat washer, spring washer, and nut to fix the cable holder base.

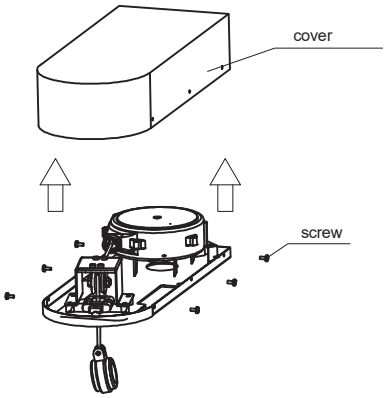

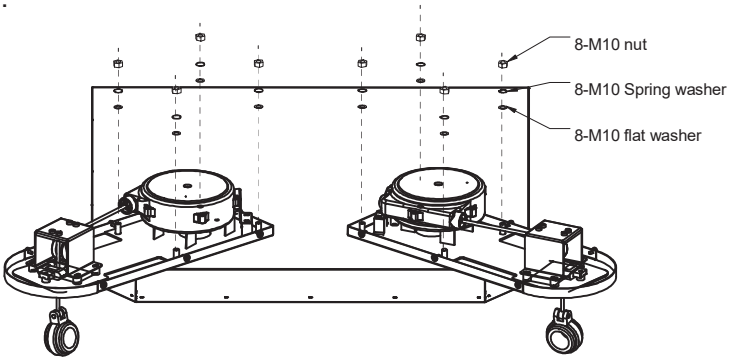

3. Install the upper cover and secure it to the cable holder using the removed screws.

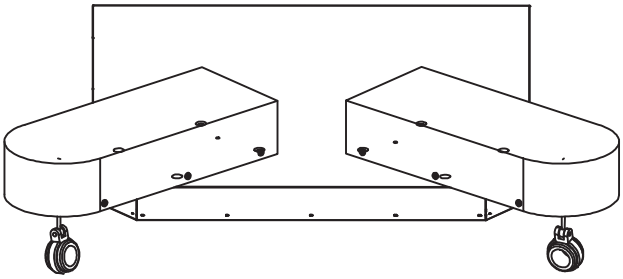

AC INPUT WIRING CABLES CHOOSE

NO.	The section for AC feed cables	Max. Power of charger	Specification of terminal screw
1	ZC-YTV-0.6/1kV-3*35+2*16	60kW	L1/L2/L3 is M8,N/PE is M10
2	ZC-YJV-0.6/1kV-3*95+2*50	120kW	L1/L2/L3 is M112,N/PE is M10
3	ZC-YJV-0.6/1k7-3*150+2*70	150kW	L1/L2/L3 is M14,N/PE is M12
4	ZC-YJV-0.6/1kV-3*185+2*95	180kW	L1/L2/L3 is M16,N/PE is M12
5	ZC-YTV-0.6/1kV-3*185+2*95	240kW	L1/L2/L3 is M16,N/PE is M12
6	DoubleZC-YJV-0.6/1kV-3*150+2*70	300kW	L1/L2/L3 is M14,N/PE is M12
7	DoubleZC-YJV-0.6/1kV-3*150+2*70	350kW	L1/L2/L3 is M14,N/PE is M12

Notes:
· The AC feed power cables to the charger are not included.

Warning: Before electrical connection, all switches shall be placed in the disconnection position.

INSTALLATION

CONNECT ELECTRICAL WIRING

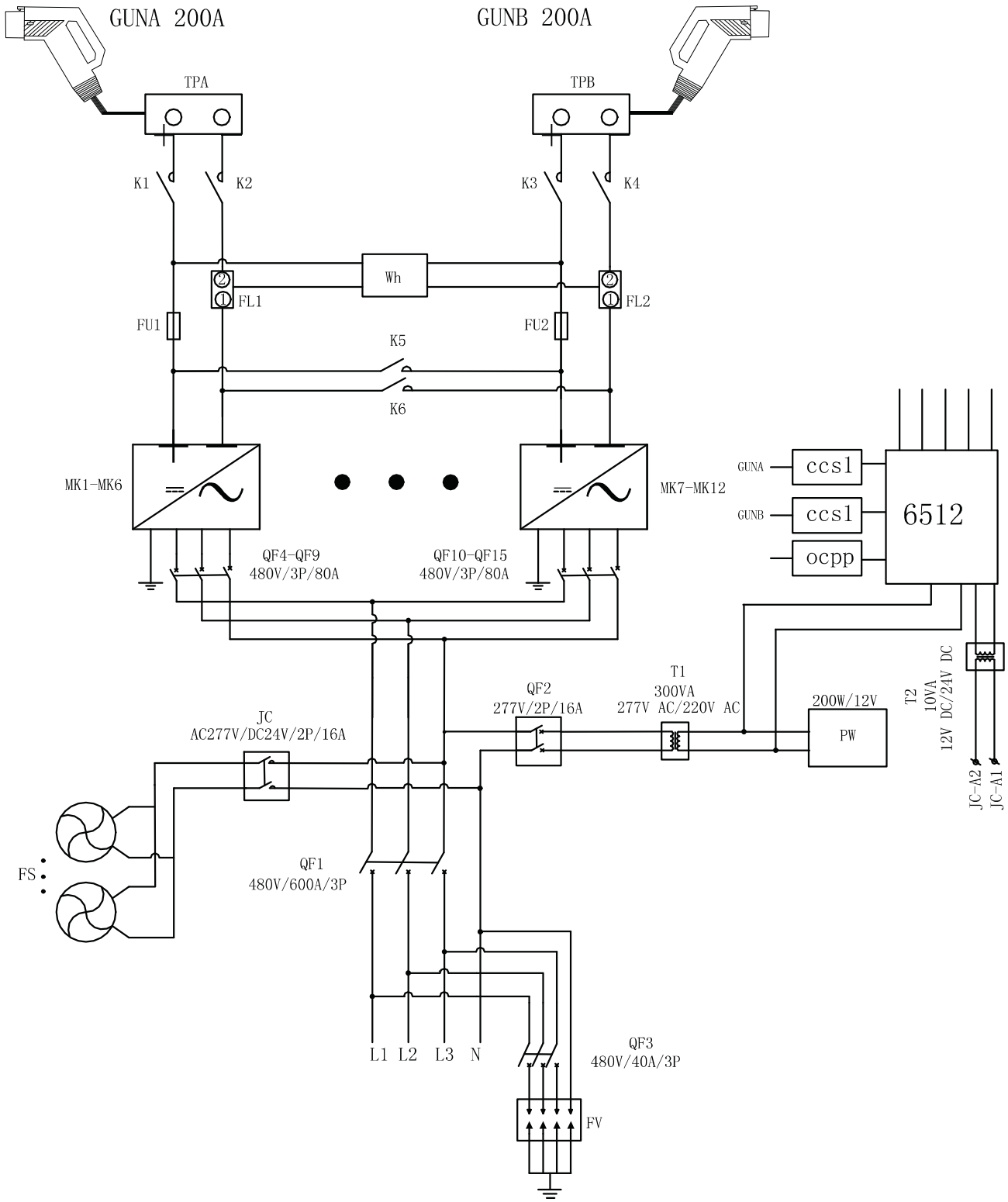

INSTALLATION

· The position of cable entrance is shown mark in the figure below.

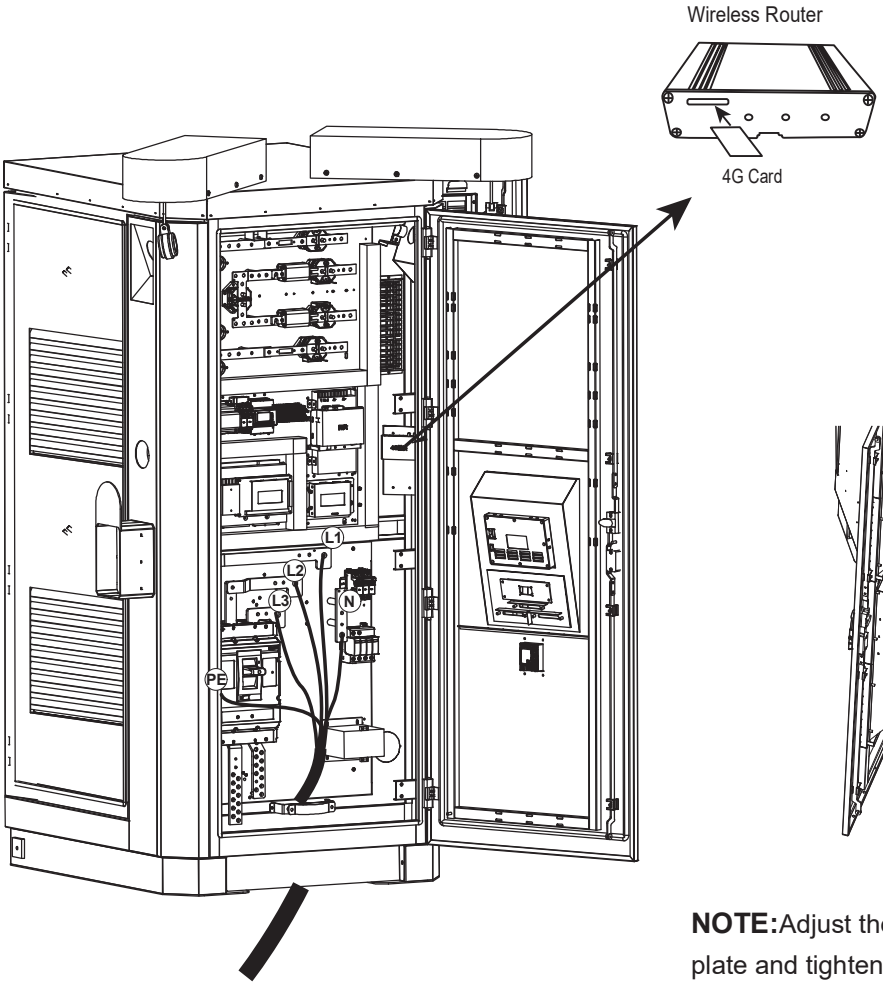

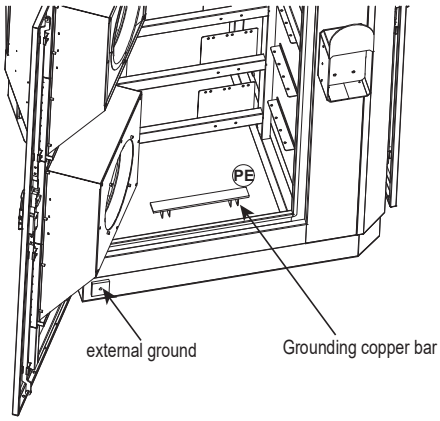

NOTE: Adjust the position of the inlet cover plate and tighten it in place, and block the inlet hole with fireproof mud to ensure sealing.

4G CARD INSTALLATION:

As shown in the diagram, remove the wireless router from the machine: draw it to one side, then turn it over, then insert the card into the 4G card slot of the router, and then reinstall the router into the rail from one side.

CAUTION: The module is heavy, Please be careful when moving the module.

START UP

Verification and inspection

· Check if the bolts of the AC and protective ground cables of the charger are correctly tightened to the specified torque.

· Check the resistance between the charger protective ground and the low voltage switchboard ground connection; the value must be according to local codes.

· Grid AC with L1/L2/L3/N/PE wiring .

· Before switching ON all the fuses and circuit breakers, check the supply voltage between lines: it must be 480V a.c，60Hz.

SWITCH ON

· Switch on all the circuit breakers in the charger power cabinet.

INSTALLATION

OCPP 1.6J NETWORK CONNECTION

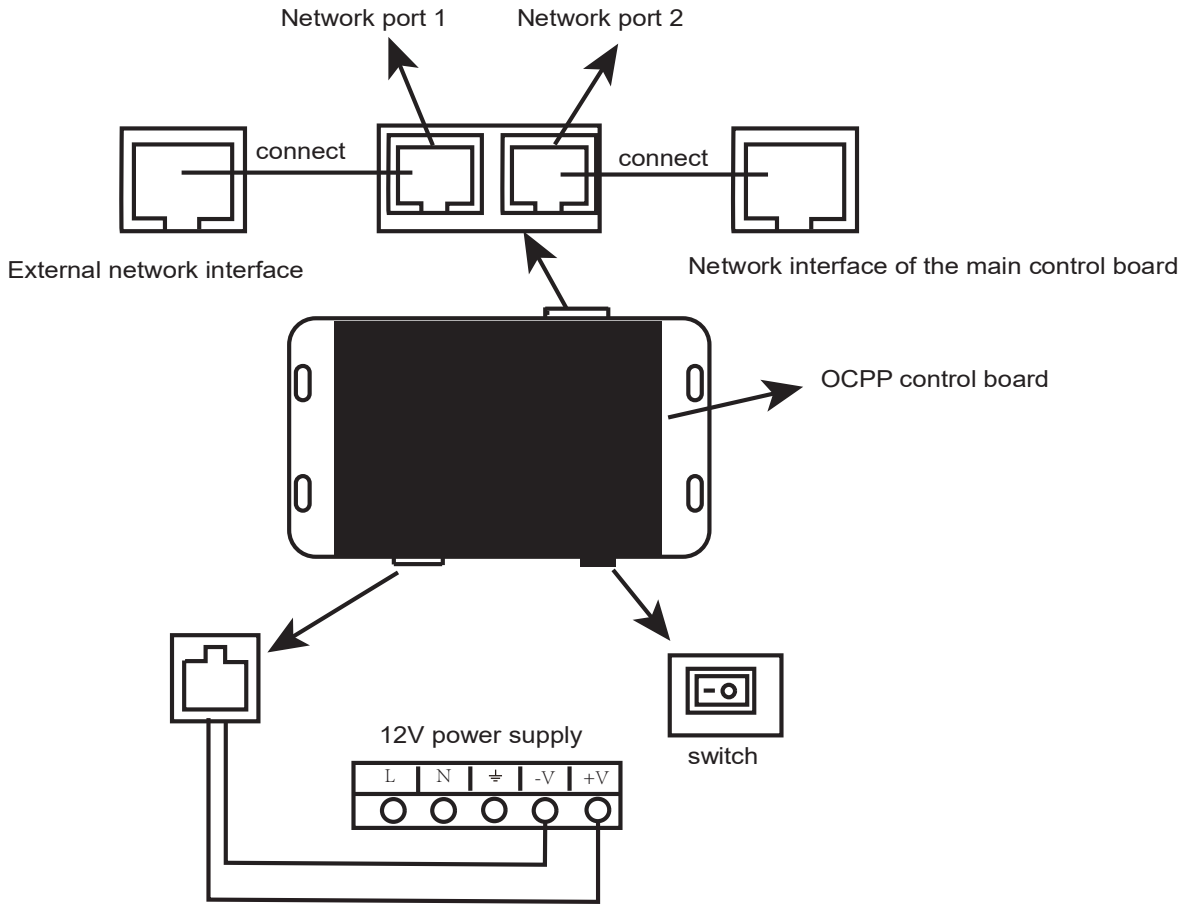

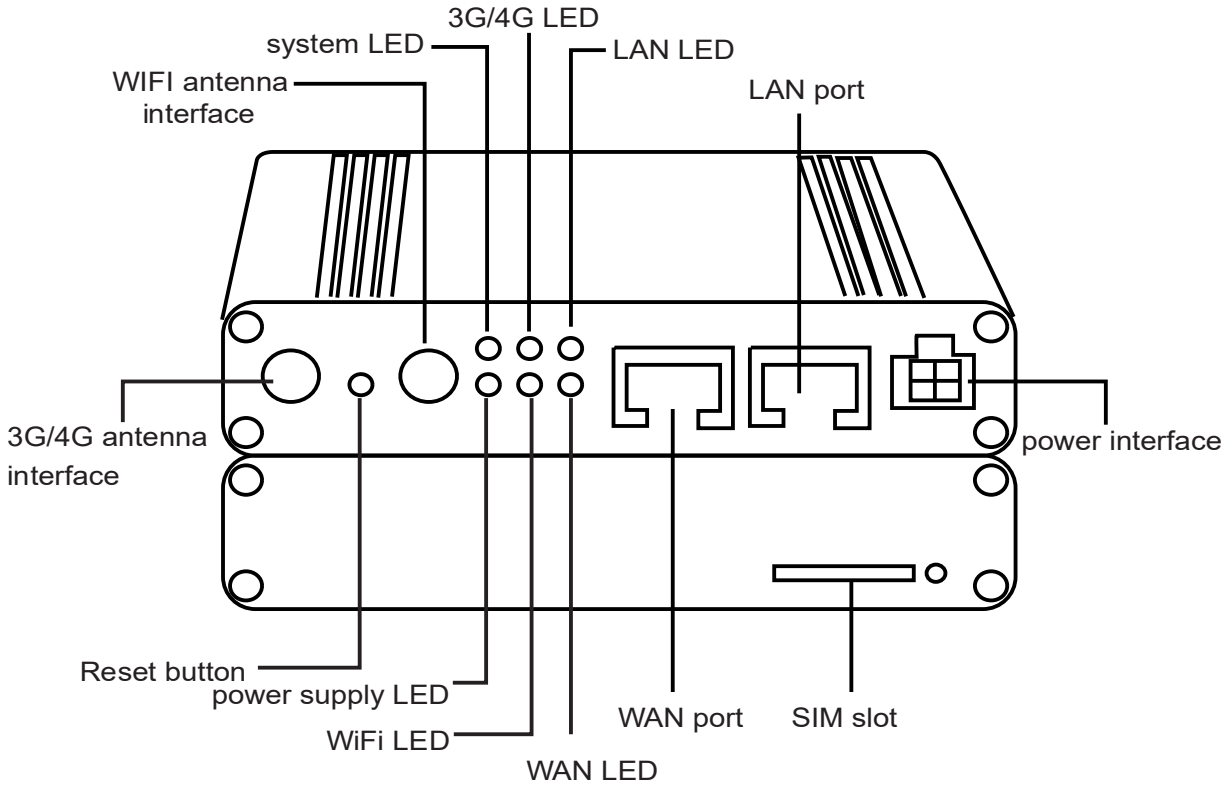

USER MANUAL

Warning: Before attempting to install or start up the charger must ensure that the safety instructions in this manual have been carefully read and observed by technically competent personnel. Keep this manual with the charger for future reference.
This charger must not be started or put into use without having been commissioned by a fully trained and authorized person.

The charger operation depends on its output connections: CCS1. During the charging process, the Human Machine Interface (HMI), will give instructions and will signal different stages.

OPERATING INSTRUCTION

1.Direct charge

Step 1: Take the charging gun and plug it into the charging socket of the vehicle;

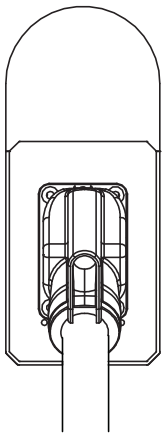

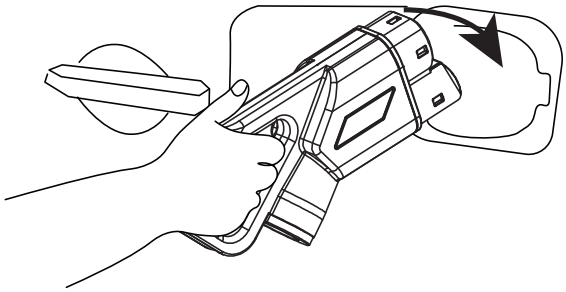

Step 2: After power connection, inserting the gun, the indicator turns green,The LCD screen displays the following information：

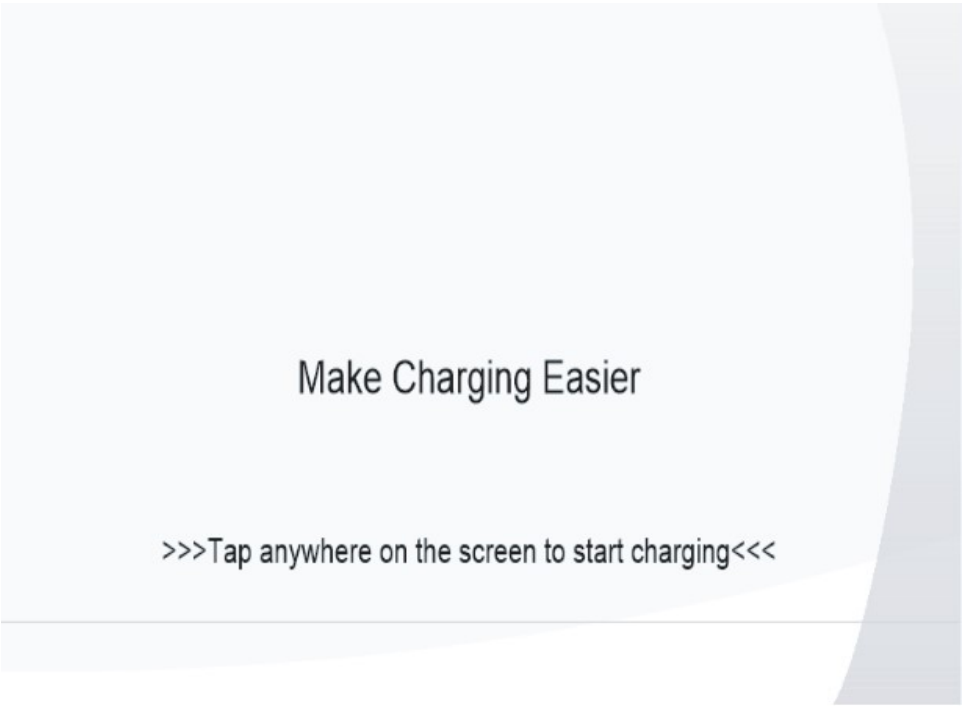

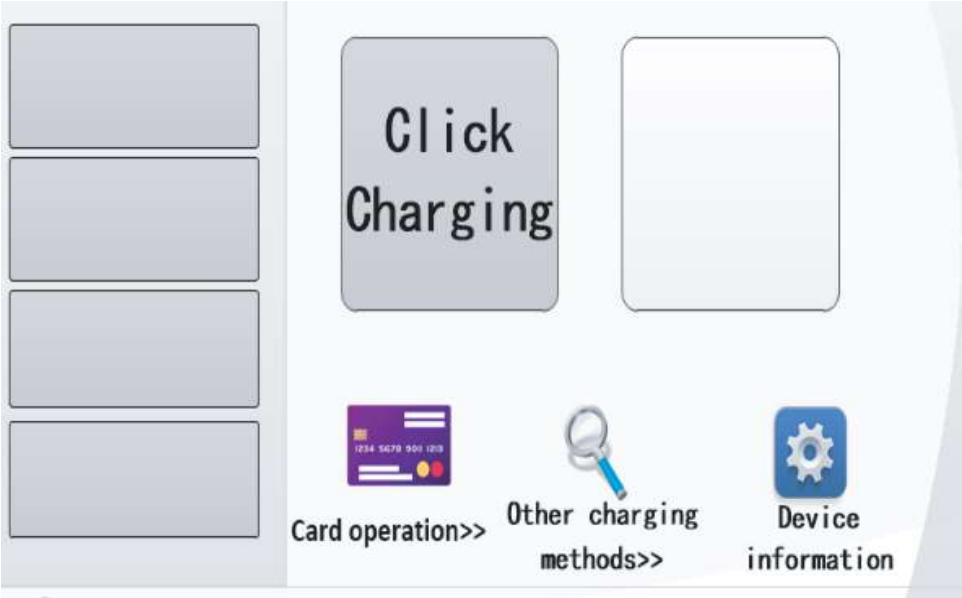

Step 3: Click the “Click Charging”.Inter the next interface.Please Click”12V”.

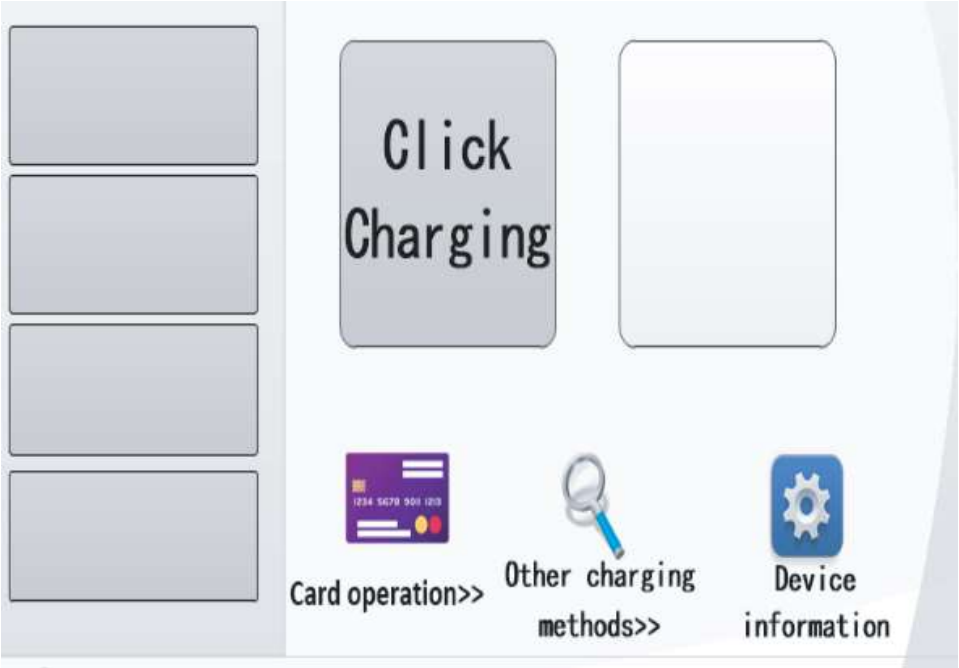

Step 4: Inter the next interface.Please Click”Auto Fill”.

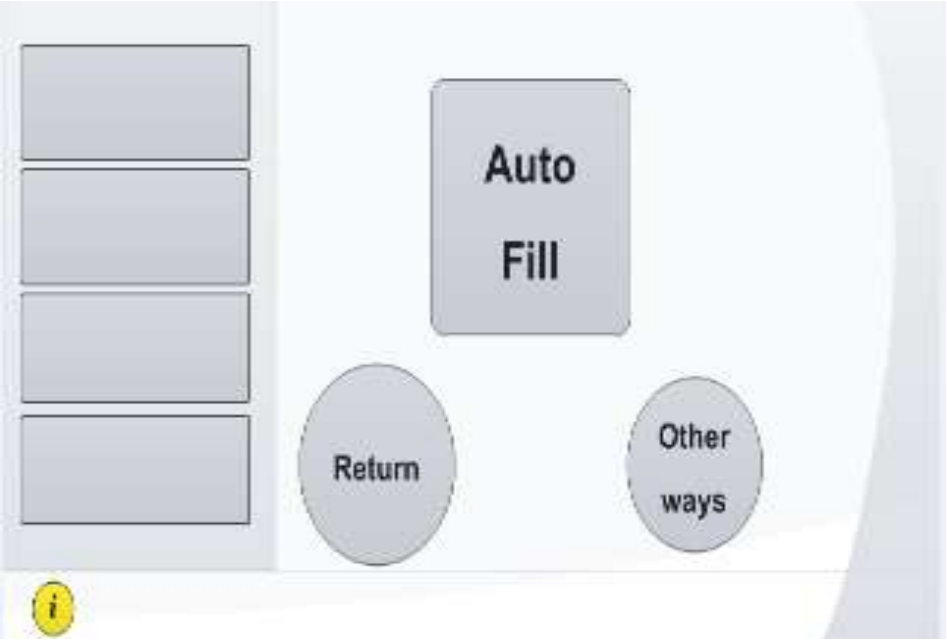

Step 5: The machine starts charging, and displays real-time voltage and current and other parameter information， When fully charged, the charger will automatically stop charging. During charging, you can also click the "End charge" ， Put the gun back.

2.Background OCPP Settings

Step 1 Make sure that the network cable is properly connected to the 4G card.On the bottom screen,click the "Device information" .

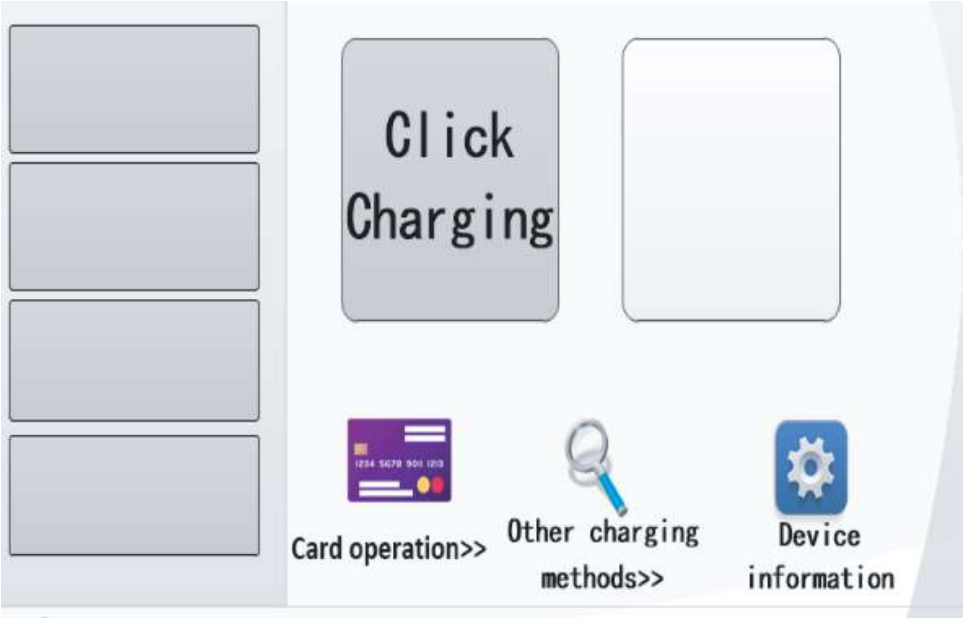

Step 2. click the "Setup" .

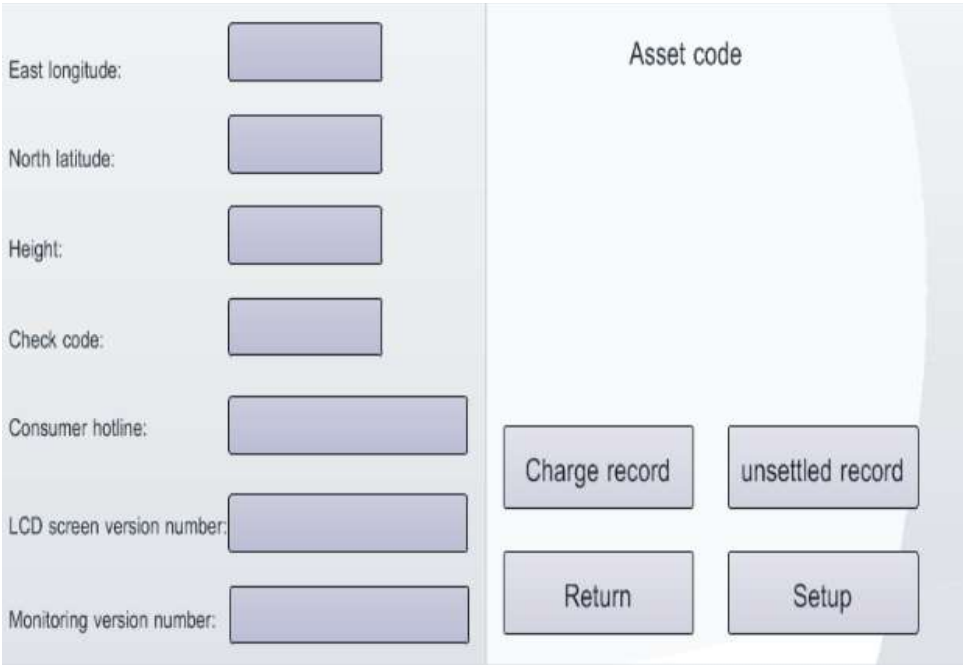

Step 3 . come to the following interface,Input che passwords“1”,click the "OK" .

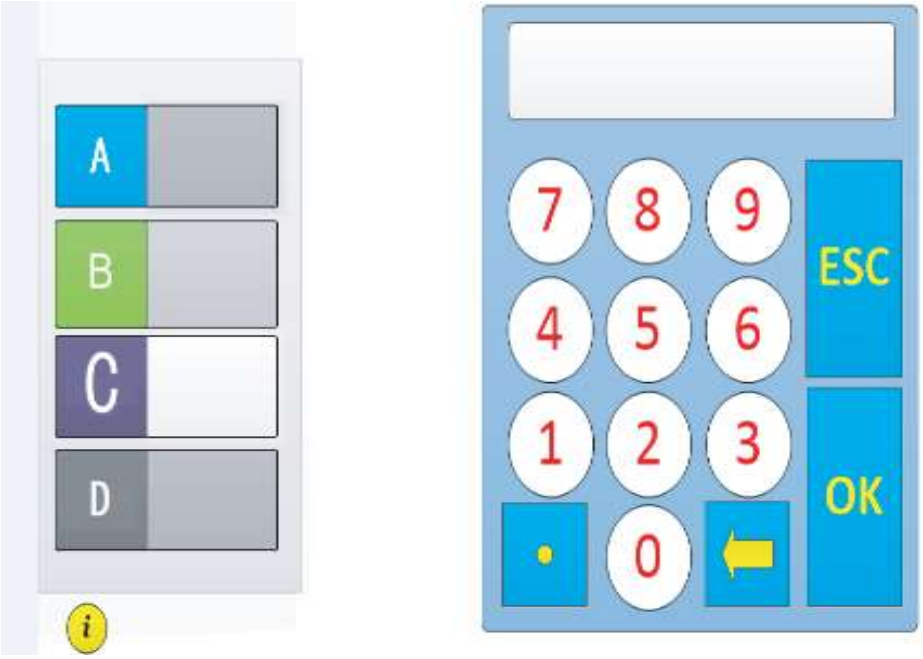

Step 4. come to the following interface,click the "General settings" .

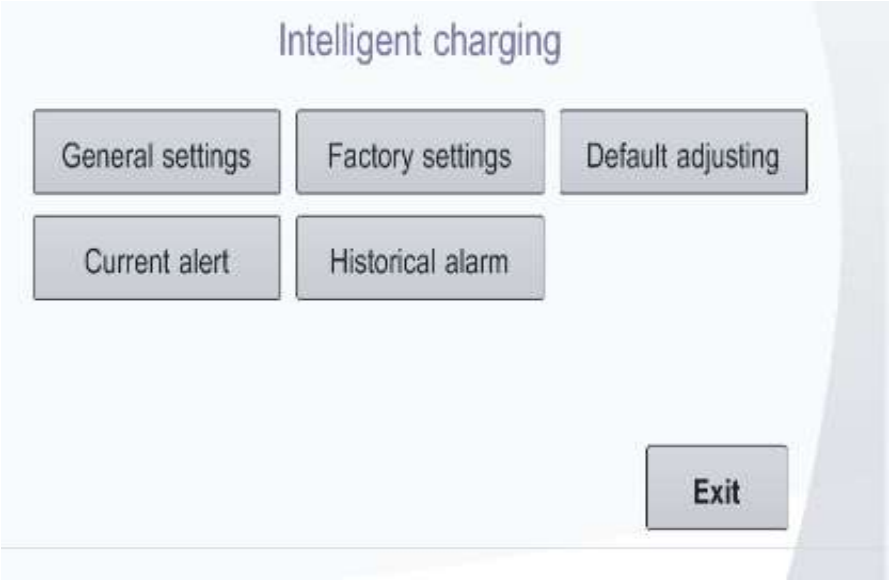

Step 5 . come to the following interface,click the "Backstage" .

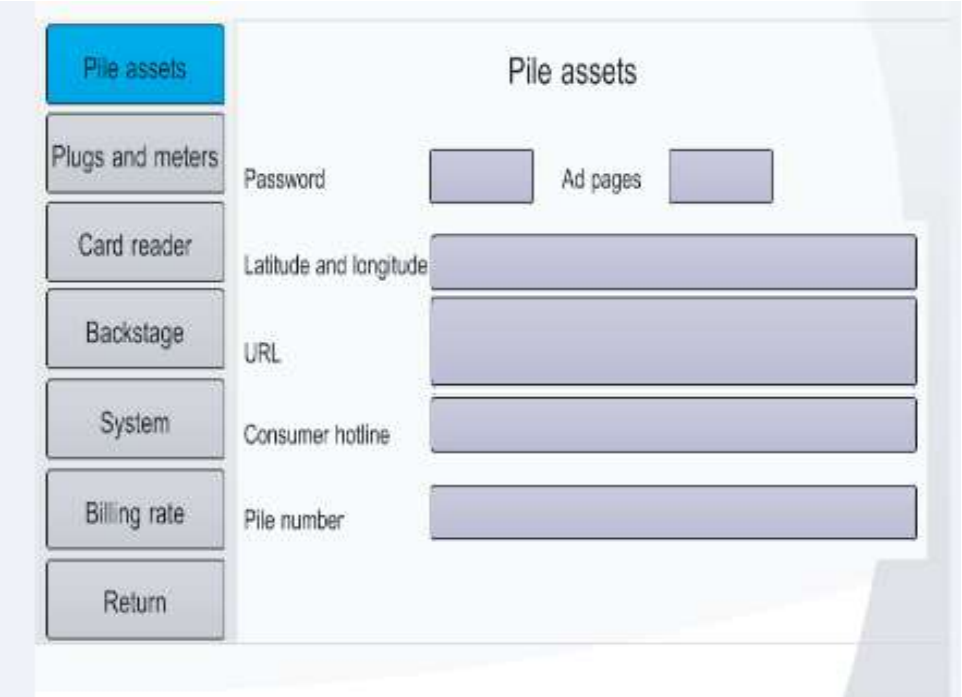

Step 6. come to the following interface,click the "Billing model", IP 、 Port number and Pile coding.

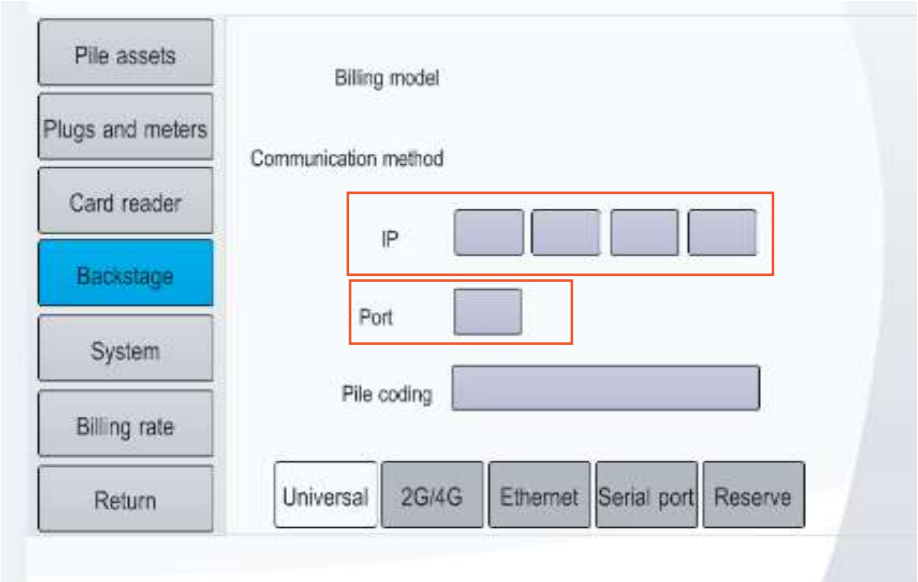

Step 7 . come to the following interface,click the "pile assets",Input “URL”.You can reset the Password in the password area as required.

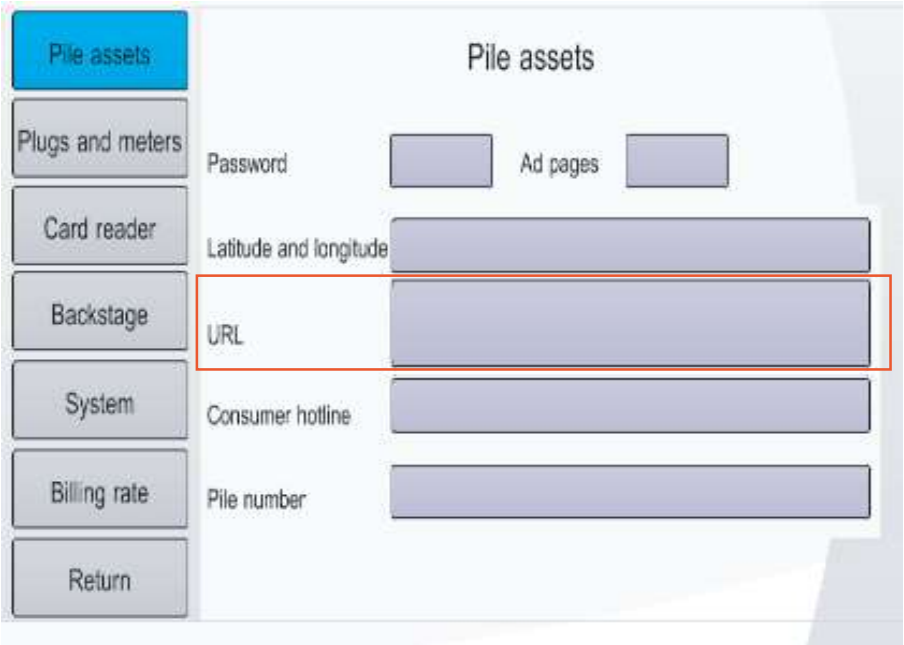

Step 8. Use the computer to log in to the background website and operate EV Charger.

MAINTENANCE

The charger enclosure does NOT need to be opened for routine maintenance tasks.
Before checking the charger device, make sure that the AC and DC side switches of the power supply circuit have been disconnected and that the DC output voltage is 0V before maintenance.

1. Dust the air inlet, exhaust outlet, fan and filter screen once every 2-3 months. Regularly replace the filter cotton.It is recommended to remove dust once a week in areas with severe dust.
2. Regularly inspect the exterior of the equipment for visual damage, if damage affects safety, isolate the equipment and prevent its use until appropriate repairs have been completed.
3. Once a year, the charger and switchgear (if installed) should be electrically inspected by an appropriately qualified electrician in accordance with the current legislation for the installation location. A record of the tests and results must be kept.
4.Regularly check whether the ventilation facilities in the place where the equipment is located are in good condition and whether the indoor temperature meets the requirements;
5.Clean the charger with dry cloth or anti-static cloth. Do not use chemical or abrasive cleaning agent to avoid damaging the shell.
6.When it is not used for a long time, the AC power supply must be disconnected, and it should be placed in a dry and ventilated place indoors and covered with a hood. After a period of time, it should also be electrified to remove moisture.

TROUBLESHOOTING

TROUBLE SHOOTING

If abnormal situation happens while running, and charger need to stop to do inspection, following steps must be strictly followed:

Quickly press the "off" button to stop the charger;

Disconnect the control power switch, disconnect the main power switch Turn off the main switch power supply (not affecting other equipment);

Wait after 10 minutes to open the cabinet door, measure the DC output voltage with a multi-meter, and confirm that the DC output voltage is 0V then the internal maintenance operation can be carried out;

When implement internal maintenance, AC line power supply must be disconnected, charger and battery connection line or charging gun disconnect.

After the maintenance is completed, test and commissioning to confirm the charger is normal before it can be put into formal operation.

In the maintenance process, only one person can operate, the other personnel monitor, and the guardian personnel and the operator need to maintain a certain distance.

It must be completed by professional engineers to ensure safety of both personal and equipment!

FCC Caution.

This device complies with part 15 of the FCC Rules. Operation is subject to the following two conditions: (1) This device may not cause harmful interference, and (2) this device must accept any interference received, including interference that may cause undesired operation.

Any Changes or modifications not expressly approved by the party responsible for compliance could void the user's authority to operate the equipment.

Note: This equipment has been tested and found to comply with the limits for a Class B digital device, pursuant to part 15 of the FCC Rules. These limits are designed to provide reasonable protection against harmful interference in a residential installation. This equipment generates uses and can radiate radio frequency energy and, if not installed and used in accordance with the instructions, may cause harmful interference to radio communications. However, there is no guarantee that interference will not occur in a particular installation. If this equipment does cause harmful interference to radio or television reception, which can be determined by turning the equipment off and on, the user is encouraged to try to correct the interference by one or more of the following measures:
-Reorient or relocate the receiving antenna.
-Increase the separation between the equipment and receiver.
-Connect the equipment into an outlet on a circuit different from that to which the receiver is connected.
-Consult the dealer or an experienced radio/TV technician for help.

This equipment complies with FCC radiation exposure limits set forth for an uncontrolled environment. This equipment should be installed and operated with minimum distance 20cm between the radiator & your body.