AI-WIRELESS ROBOTIC POOL CLEANER

USER MANUAL

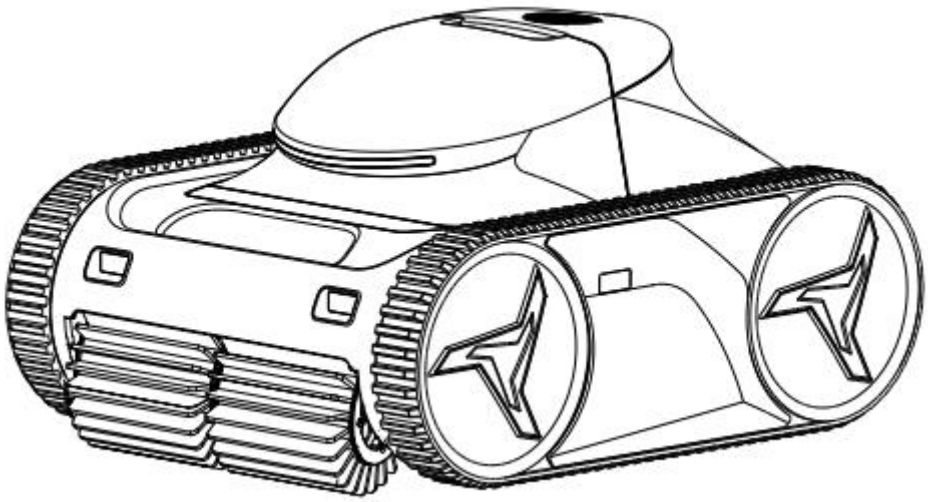

X80,X60, X45, X30, W80, W60, W45, W30, M80, M60, M45, M30

THANK YOU FOR PURCHASING X80,X60, X45, X30, W80, W60, W45, W30, M80, M60, M45, M30

AI-WIRELESS ROBOTIC POOL CLEANER

Please read the manual carefully before

installing or using it and keeping it for subsequent use.

EN

★★ TIPS ★★

How to achieve the most efficient cleaning

It is recommended to place the robot at the pool corner, which will facilitate quick coverage of the entire pool floor area.

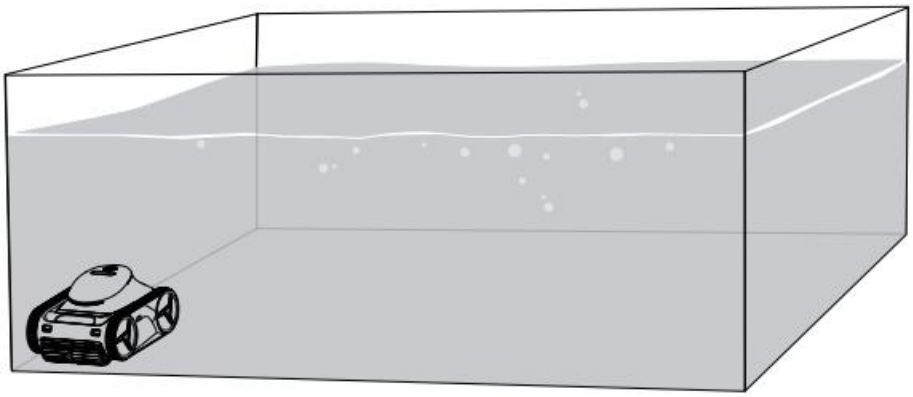

How to let the water drain out while removing robot from the pool

Place the robot on the edge of the pool for a while and let the water drain out.

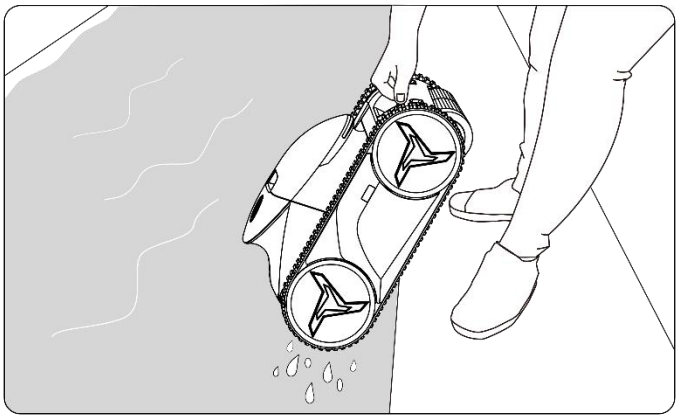

How to open the filter box

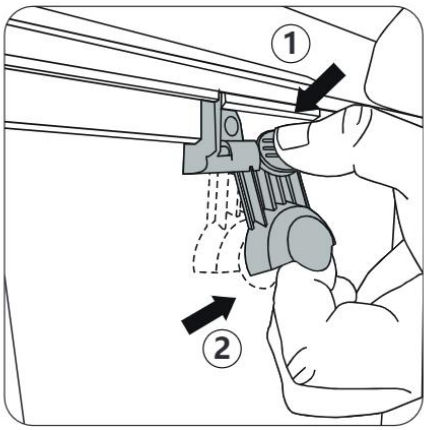

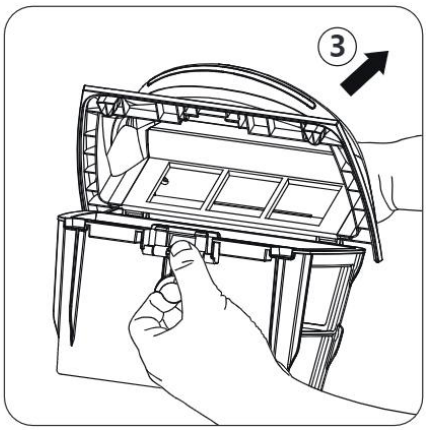

For battery protection, it is recommended that the robot should be fully charged every 3 months and magnetic cap should be inserted back if the robot not be used for more than 14 days.

⚠ WARNINGS

Information contained in this warnings page will help you operate the robot safely, protect yourself and others from hazards, and prevent damage to the robot and other property.

GENERAL WARNINGS

- Read the instructions before operating the robot.
- The robot is designed for pool cleaning; do not use it for other purposes.
- Keep the robot out of the reach of children or persons with reduced physical, sensory, or mental capabilities, or lack of experience and knowledge, unless they have been given supervision or instruction.
- Children should not play with the robot.
- The robot must be maintained by dealer except for simple routine maintenance written in this manual.
- Installers must follow manufacturer's instruction and keep in compliance with national or local standards for installation. Under no circumstances will the manufacturer be held responsible for any outcome incurred by failure to comply with applicable standards or local regulations.
- Incorrect installation or use of the robot may cause serious damage to property or injuries to people.
- Do not enter pool while the robot is in water.

WARNINGS ON USE

- For the purposes of recharging the battery, only use the detachable supply unit provided with this appliance, and operated this power supply at least 3.5 meters from the edge of the pool.
- Disconnect the robot from the power supply and insert back the magnetic cap

before any maintenance on the robot.

- Do not operate the robots with wet hands.
- Disconnect the robot from the supply mains before carrying out user maintenance such as cleaning the filter.
- Do not try to repair the robot yourself or open engine box in case of malfunction, please contact your dealer.
- If there is any malfunction or release of odor from the robot when charging, disconnect it from the power supply immediately and contact your dealer.
- Use only original replacement parts supplied by the manufacturer for service and repair.

SPECIAL CONDITIONS APPLICABLE TO ROBOT

- The robot is intended for swimming pools with a depth less than 3 meters and a water temperature between 0°C ~ 35°C. (Below 15°C the endurance time may be affected)
- The robot will automatically stop running if the water depth is less than 40 centimeters for the purpose of motor protection.
- Do not use the robot during shock chlorination.
- Do not use the robot in thunder storm or stormy weather.
- Do not charge the robot outdoors
- Do not expose the robot to direct rainfall or sunlight for an extended period.
- Optimum storage temperature between -20-60℃ and storage humidity between 35%-85%/RH.

⚠ CAUTIONS

- Rest/hold the robot by the pool edge for water to drain out before lifting the robot out of water, do it slowly so as to prevent back injury.
- Clean the filter basket after each cleaning cycle.
- Do not lift the robot out of water by track.

REMINDER

- When the robot battery is below 30%, it will clean the floor of the pool only.

Table of Contents

SECTION 1. PRODUCT OVERVIEWS **1**

1.1 Packaging content 1

1.2 Technical specification 2

1.3 Preparation 3

SECTION 2. OPERATION **5**

2.1 Introduction of button 7

2.2 Operation on the display of the unit 9

2.3 Cleaning filter basket 10

2.4 Charging the robot 11

2.5 WIFI matching for the robot 12

SECTION 3. MAINTENANCE **13**

3.1 Filter maintenance 14

3.2 Impeller maintenance 14

3.3 Replace the worn brushes 16

3.4 Replace the worn tracks 17

SECTION 4. TROUBLE SHOOTING **18**

SECTION 1. PRODUCT OVERVIEWS

1.1 Packaging content

The following items are included in the packaging of robot. Please contact your dealer if any damage or loss.

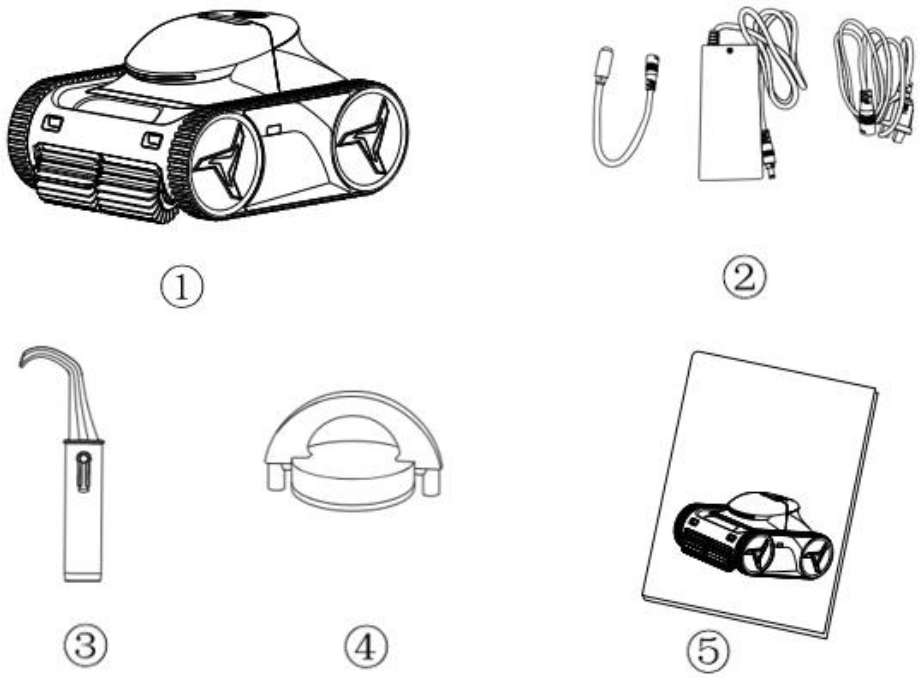

① The robot ② Charger ③ Hook ④ Magnetic cap*2 ⑤ User manual

Note:

1. Remove the Magnetic cap ④ when using or charging. Insert Magnetic cap to machine's bottom for battery protection when not using the robot for more than 14 days.
2. If software exception happens, insert Magnetic cap to machine's bottom for 2 seconds, then remove it to restart.

1.2 Technical specification

Model	X80,M80,W80	X60, M60,W60	X45,M45,W45	X30,M30,W30
Performance condition reference*: Floor mode				
Endurance time	8h	6h	4.5h	3h
Performance condition reference*: Floor/wall/waterline mode				
Endurance time	4.5h	3.5h	2.5h	2h
Charging time	5h	4h	3h	2h
Battery	14Ah (352wh)	10.4Ah (262wh)	7.8Ah (196wh)	5.2Ah (131wh)

Optimum pool temperature	0~35℃
Cleaning mode	Floor/Floor and Wall and Waterline
Multiple cycle option	0.5h/1h/2h
AI mode	YES
App application	YES
Filter capacity	3.2L
Filtration accuracy	180μm(80mesh)
Pump flow rate	20~10m^3/h
Running power	30-110W
Moving speed	12m/min

Number of motors	3
Charger input	100-240VAC ~ 50/60Hz 1.5A
Charger output	29.4Vdc, 2A
Running voltage/current	25.2V/1.2A
Robot NW/GW	12 / 17kg
Robot dimension (L*W*H)	495*395*265 mm
Robot packaging dimension (L*W*H)	580*448*330 mm

* Reference: Above working time is based on 2 hours' cleaning each time at floor mode in the liner pool.

Note: The manufacturer reserves the right to modify these specifications without notice.

1.3 Preparation

① Remove the Magnetic cap from the bottom of the robot and store it well. 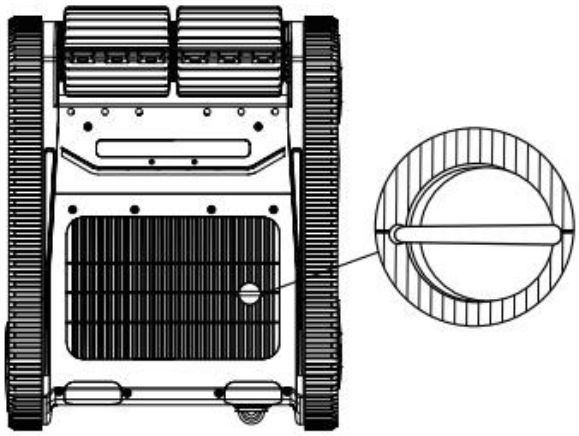	② Remove the plug cover. After fully charged, the plug should be covered back. 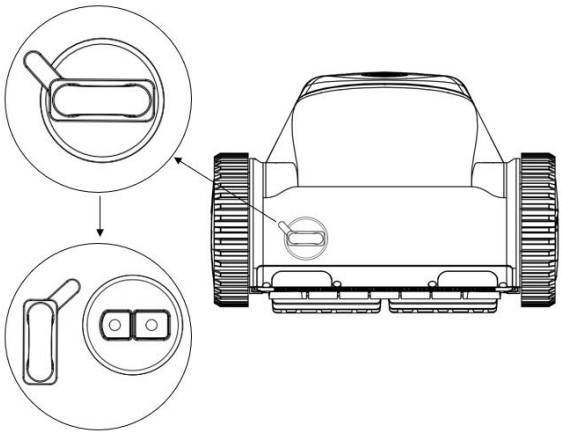
③ Connected to 90-265V power supply through charger. The red light of the power indicator is on: charging The green light is of the power indicator is on: fully charged already. Please fully charge the robot before the first use.	④ Install the configured hook on the rod (Rod is exclusive). 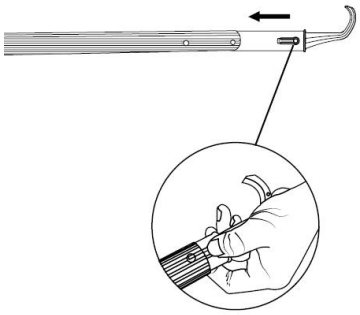

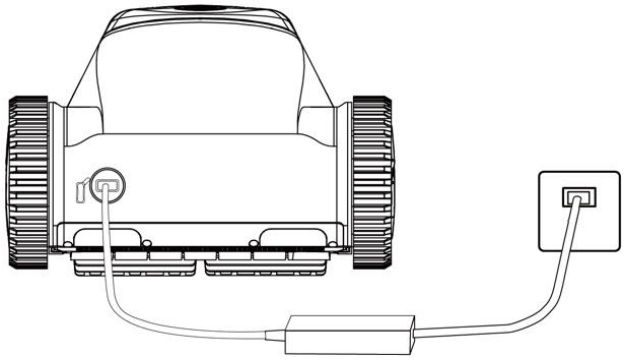

SECTION 2. OPERATION

⚠ CAUTION

To prevent possible damages to the robot or people, be sure to follow these guidelines:

- After cleaning is completed, put the robot in the cooling dry place against direct sunlight.
- The robot becomes heavier when filled with water. Pay special attention when lifting it out of the water, wait till water drains out from it.

IMPORTANT

- After settings are done, please drop the robot into the water within 3 minutes, or the robot will enter into the sleeping mode.
- Clean the filter basket after cleaning cycle, please avoid cleaning the surface of the filter box directly with your hands.
- The robot has a safety feature that automatically stops if a dry run happens.
- Move the robot slightly in all directions so that the air contained in the robot escapes, and the robot can go down into the water easily. (As showed in the pic below)

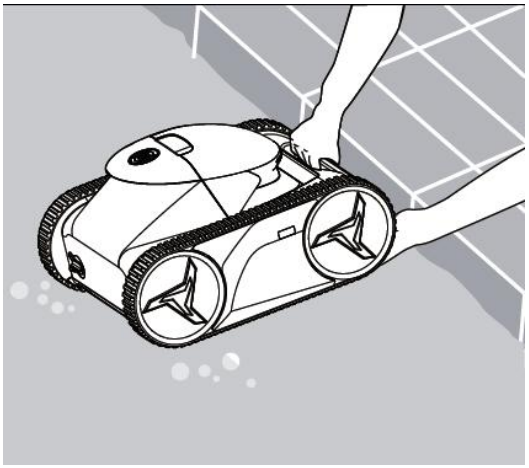

2.1 Introduction of button

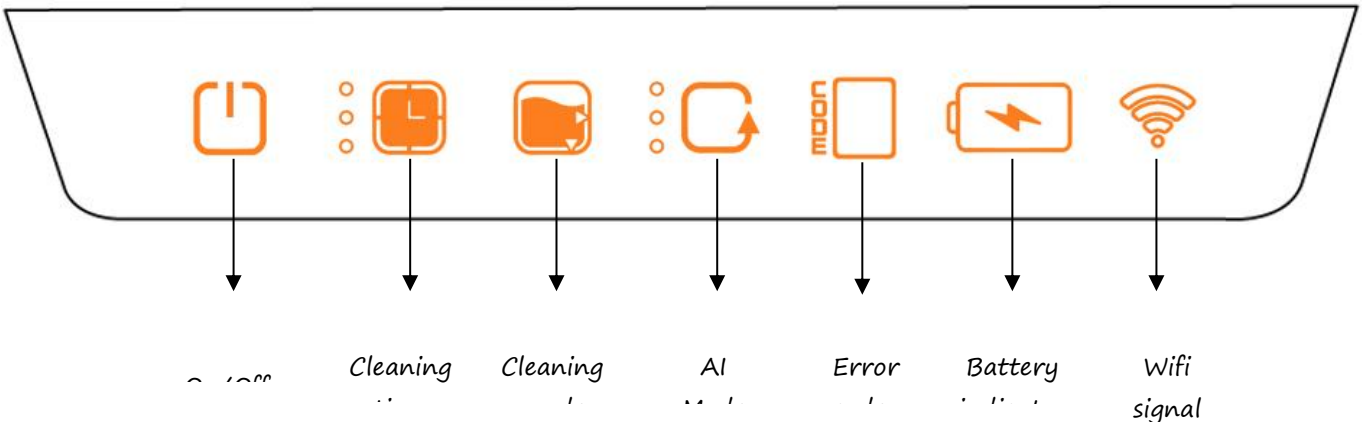

Type of button	Icon	Display Status	Description
Power switch		Green light flashes	Setup status
		Green light being on	Running status/Inspection status under water
Cleaning time setup		1 green light being on	Cleaning time: 0.5H
		2 green lights being on	Cleaning time: 1.0H

		3 green lights being on	Cleaning time: 2.0H*
		All lights being off	Cleaning until low battery
Cleaning mode		Triangle green light in the floor being on	Floor cleaning mode
		Both Triangle green lights being on	Overall cleaning mode（Floor, wall, waterline）
AI Mode		1 green light being on	Cleaning every 24 hours
		2 green lights being on	Cleaning every 48 hours
		3 green lights being on	Cleaning every 72 hours
		All lights being off	Do not need AI Mode
Error code	CODE	1	Left drive failure
		2	Right drive failure
		3	Abnormal water pump
		4	Abnormal Control panel communication
		5	Infrared sensor anomalies
		6	Abnormal water sensor
Battery light (Non-charging status）		1 green light being on	Battery level: 20-50%
		2 green lights being on	Battery level: 50-75%
		3 green lights being on	Battery level: 75-100%
Low battery		1 red light flashes	Battery level: 15-20%

Battery light (Charging status)		1 green light flashes	Battery level: 0-50%
		1 green light being on, 1 green light flashes	Battery level: 50-75%
		2 green lights being on, 1 green light flashes	Battery level: 75-100%
		3 green lights being on	Battery level: 100%
Signal light		Green light flashes	Network matching
		Green light on	Network matched
		Red light flashes	Failure Connection

*Note: If the cleaning time is set to be more than 2 hours via App, there will also be 3 lights on.

2.2 Operation on the display of the unit

1. Holding for 3 seconds to activate the device, then flashes, you can start setup the robot. After setup, press once* again for confirmation your settings. Then put the robot into the water, the robot will start cleaning automatically after it reaches to the floor. Please noted that if there is no operation on robot within 3 minutes as the in flashing status, the robot will shut down and enter into sleeping status.

*Note: There are 2 different situations when set up the AI Mode:

(Take set of " Cleaning every 24 hours" in AI Mode for example)

a. If press once and then put the robot into the water, the robot will start work immediately. After once cleaning cycle, the robot will enter sleeping mode and

automatically wake up and work after 24 hours.

b. If press for 3s and then put the robot into the water, the robot will enter sleeping mode at first. After 24 hours, it will start cleaning automatically.

2. If the battery is less than 15% during its cleaning, will keep flashing 1 red light, the robot will automatically go to the nearby poolside and shut down, then enter into sleep mode after 5 minutes.

2.3 Cleaning filter basket

When cleaning is done, the robot will stop by the wall of pool. Please use the hook to catch the handle and lift the robot out of the water, then clean the filter basket as below operation:

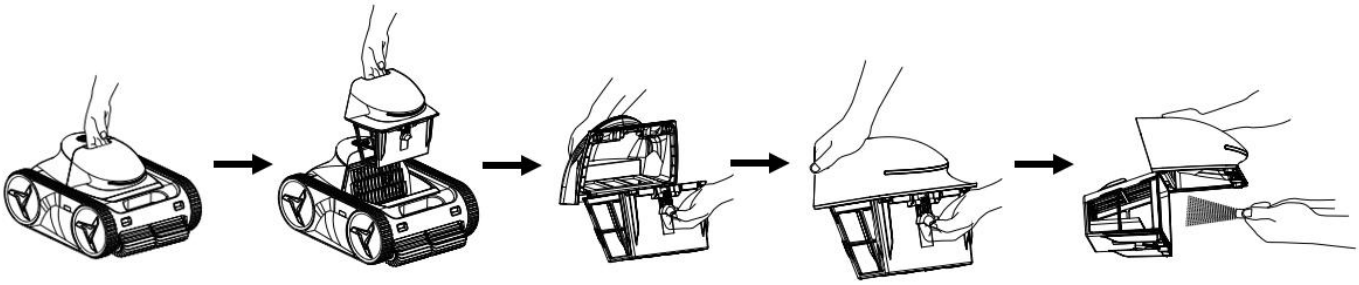

Note:

There is a risk of being scratched by surface debris when cleaning the filter basket with your hands, it is recommended to wear rubber gloves for protection.

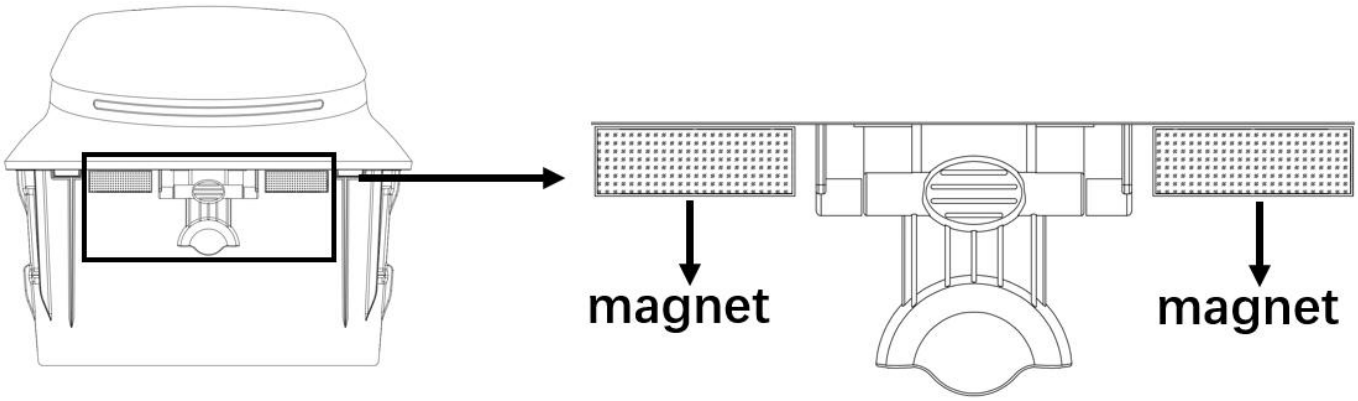

2.4 Charging the robot

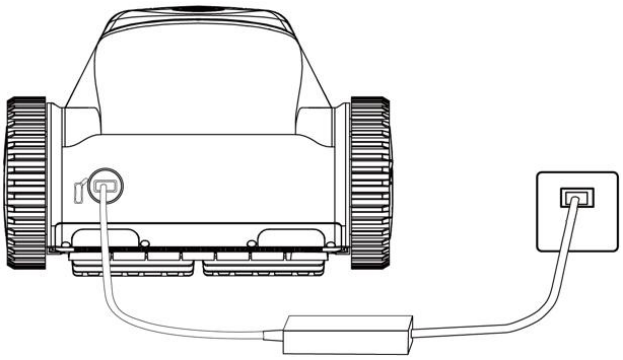

1. Plug the adapter into power supply and make sure that indicator light is being red.
2. Open the cover of the robot's plug to expose the plug charging port.
3. Align the adapter plug post with the robot socket. When the robot is charging, the battery light of the robot flashes in green and the indicator light of the adapter is being on in red.
4. If battery light is full with 3 green lights on, and indicator light of the power adapter goes green, then the robot is fully charged.
5. Before charging, make sure charging port is dry.
6. It is recommended to disconnect the charger after charging completed to protect the battery.

7. If the robot needs to be stored for long time, it should be fully charged at least every three months to protect the battery.
8. It is not recommended to charge outdoors.

   Note: the robot must use original power adapter.

2.5 WIFI matching for the robot

Hold for 3s, then the robot will have a beep sound, the robot enters matching mode, start flashing, then open the "AI-BOT" APP to search device and go matching, the robot will have three beep sounds and will be in green lights after matching done. After matching, setup of the robot can be operated by APP through Wifi or Bluetooth. Setup of the robot cannot be operated by APP if the robot is in the pool. (Due to the physical limitation of radio signal penetration in water).

Note: download the "AI-BOT" APP in iOS App Store/ Google Play Store.

Download on the App Store

GET IT ON Google Play

SECTION 3. MAINTENANCE

⚠ WARNING

1. To avoid electric shock and other hazards which could result in major injuries, disconnect the adapter from the power source before performing any cleaning and maintenance.

2. Before any maintenance operation, be sure to insert back the magnetic cap at the bottom of the robot to avoid injuries caused by impeller rotation!

3.1 Filter maintenance

1. Clean the filter thoroughly and regularly for a better cleaning and climbing performance. Otherwise, the cleaning and climbing performance may be affected when the filter if full or clogged.
2. Clean the clogged filter with mild acidic detergent, and it is recommended to clean it at least once a year.

3.2 Impeller maintenance

Visually check whether the impeller or impeller shaft is entangled with hair or other debris when the robot has a reduced suction or climbing performance, clean the debris trapped in the impeller.

*** Magnetic cap MUST be inserted back before any operations on the impeller.**

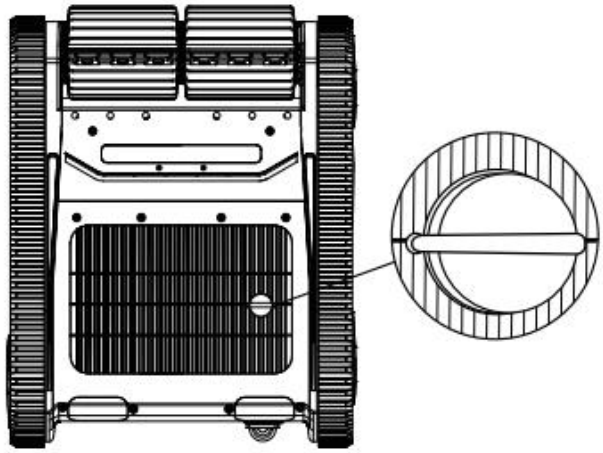

The steps are as follows:

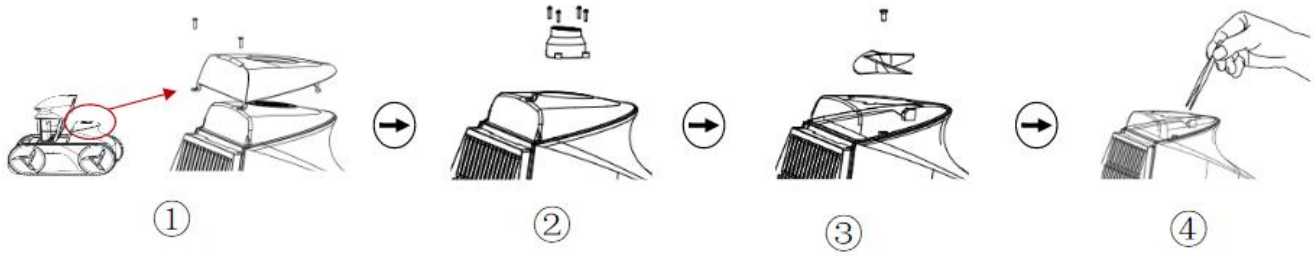

① Take out the filter box, remove the fixing screws of the inflow ring cover, and take out the inflow ring cover.

② Remove the deflector fixing screws and take out the deflector.

③ Remove the impeller screw, then take out the impeller. (PS: impeller edge is sharp, please wear gloves while operating.

④ Clean the impeller debris and reassemble the all the parts mentioned above in

order.

PS: If you have any difficulties performing impeller maintenance, please contact your dealer for assistance.

3.3 Replace the worn brushes

Remove the worn brushes and position the new brushes:

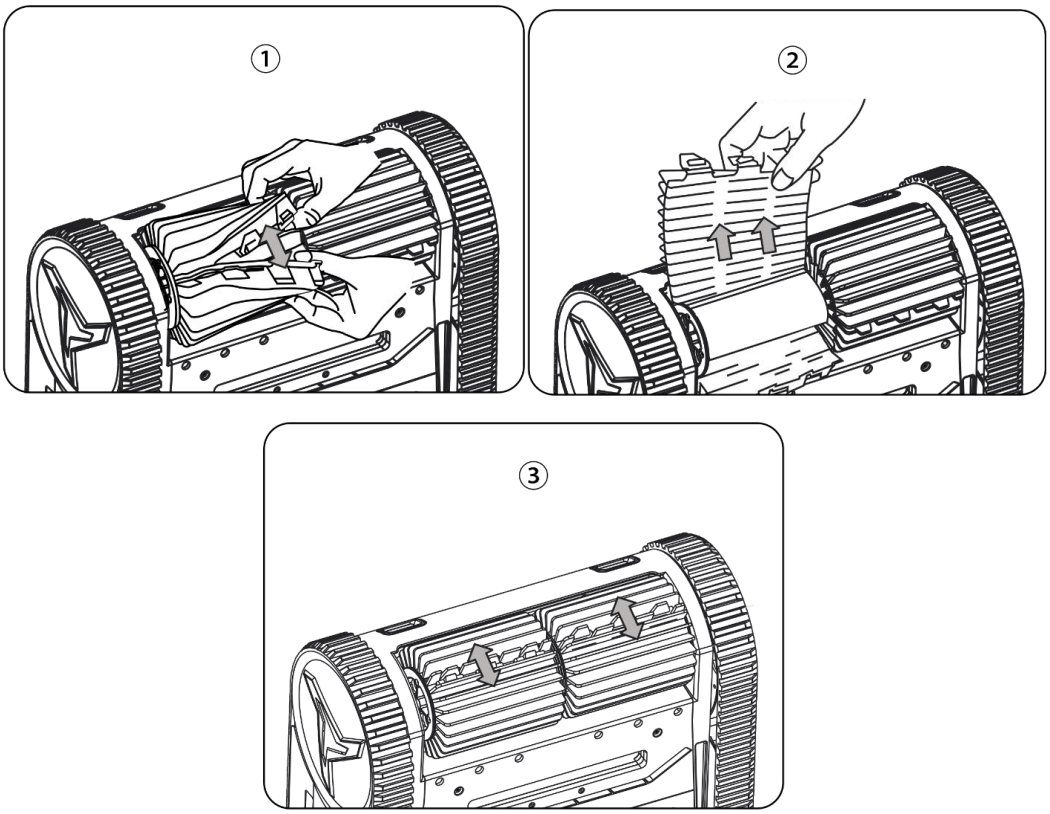

① Remove the tabs from the holes inside which they are fastened, then remove the brushes.

② Fit the side without tabs under the brush holder.

③ Roll the brush around its support, slide the tabs into the attachment holes and pull

on the end of each tab until its edge passes through the slit.

3.4 Replace the worn tracks

Remove the worn tracks:

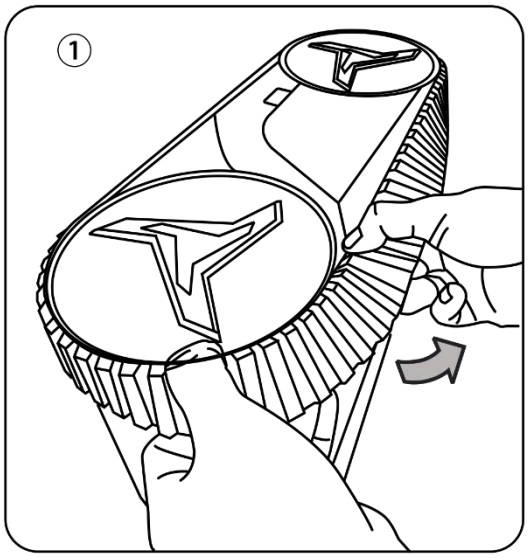

Position the new tracks:

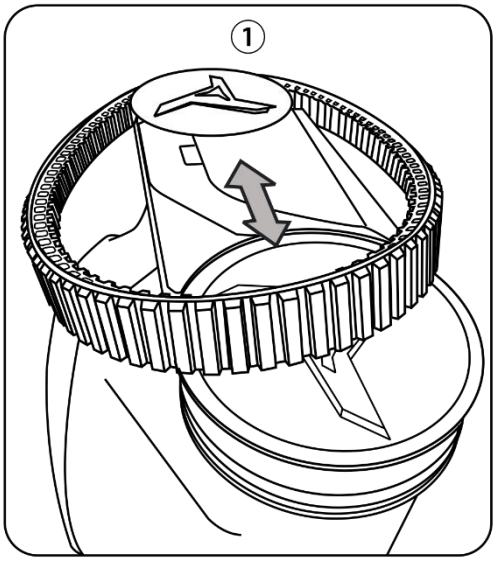

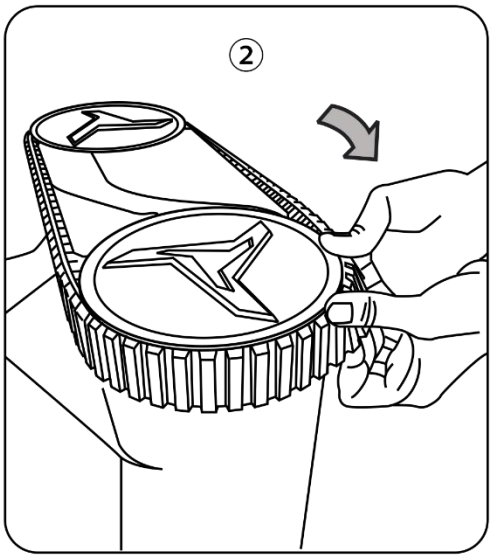

SECTION 4. TROUBLE SHOOTING

Failure	Possible reason	Solution
Charging failure	Debris on the electrode of charging head (Non-failure)	Clean debris
	The bottom Magnetic cap isn't removed (Non-failure)	Remove the Magnetic cap
	Charger is damaged	Replace charger
Switch on failure	The Magnetic cap isn't removed (Non-failure)	Remove the Magnetic cap
	Water spots on the robot display or people's hand (Non-failure)	Keep the display and hands dry, then try again
	Wrong operation (Non-failure)	Hold the power button for 3 seconds
	No power in the battery (Non-failure)	Get the robot fully charged
Not working （not moving, not pumping）	Low battery (Non-failure)	Get the robot fully charged
	Out of water (Non-failure)	Make sure the robot under water and indicator lights being on

	No pressing the on/off button after settings are done (Non-failure)	Press the on/off button after the settings are done, make sure indicator lights being on before putting the robot into water
	Full load of filter basket (Non-failure)	Clean filter basket
Moving but not pumping	The impeller gets stuck	Check whether there are too many debris in the guide ring, affecting the rotation of the impeller. (Please insert back the magnetic cap before operation, to avoid injuries caused by the impeller rotation）.
	Full load of filter basket (Non-failure)	Clean filter basket
	Water inlet is blocked(Non-failure)	Take out of filter basket and clean water inlet
	Battery low (Non-failure)	Get the robot fully charged
Pumping but not moving	The moving motor gets stuck	Please contact the dealer for replacement
	Track is deviated and stuck (Non-failure)	Turn the robot upside down and roll the track forward and backward to restore the track
	Track is damaged	Replace track
	Scrubber gets stuck (Non-failure)	Clean scrubber
	The robot gets stuck by obstacle	Remove obstacle and restart

	and shut down for auto-protection (Non-failure)	
	Full load of filter basket (Non-failure)	Clean filter basket
Not climbing	Under floor cleaning mode (Non-failure)	Turn to overall cleaning mode
	The impeller is stuck	Check whether there are too many debris in the guide ring, affecting the rotation of the impeller. (Please insert back the magnetic cap before operation, to avoid injuries caused by the impeller rotation).
	Full load of filter basket (Non-failure)	Clean filter basket
	Water inlet is blocked (Non-failure)	Take out of filter basket and clean the water inlet
Poor cleaning capability.	Battery low (Non-failure)	Get the robot fully charged
	The impeller is stuck	Remove any debris or hair in the guide ring
	Full load of filter basket (Non-failure)	Clean filter basket
	Water inlet blocked (Non-failure)	Take out of filter basket and clean water inlet.
	Scrubber is damaged	Replace scrubber

	Filter basket is damaged	Replace filter basket
Unusual non-stop	Software failure	Insert the magnetic cap back to bottom for 5s, then remove it and restart

Note:

1. Do not use the robot when people or animals are in the pool.
2. Charger MUST BE DISCONNECTED before conducting any maintenance on the robot.
3. Contact your dealer for problems not covered in Trouble Shooting Guide.
4. Normally, the robot will stop at the poolside when it encounters any failure or when the battery level is less than 15%.
5. In case of robot anomalies, the LED indicators on the control panel flash, and the Error Code will be displayed, please see chapter 2.1 to check the reason of malfunction.
6. By clicking the button or charging the robot, the Error Code may be cleared. If the Error Code cannot be cleared, please contact your dealer for technical support.

Indoor

For switch power supply indoor use only.

Recycling

When disposing the product, please hand it over to a designated

collection point for the recycling of waste electrical and electronic equipment.
The separate collection and recycling of waste equipment at the time of disposal will help ensure that it is recycled in a manner that protects human health and the environment.
For more information about where you can drop off your waste for recycling, please contact your local authority

FCC Caution:

Changes or modifications to this unit not expressly approved by the party responsible for compliance could void the user' s authority to operate the equipment.

This device complies with part 15 of the FCC Rules. Operation is subject to the following two conditions: (1) This device may not cause harmful interference, and (2) this device must accept any interference received, including interference that may cause undesired operation.

IMPORTANT NOTE:

Note: This equipment has been tested and found to comply with the limits for a Class B digital device, pursuant to part 15 of the FCC Rules. These limits are designed to provide reasonable protection against harmful interference in a residential installation.

This equipment generates, uses and can radiate radio frequency energy and, if not installed and used in accordance with the instructions, may cause harmful interference to radio communications. However, there is no guarantee that interference will not occur in a particular installation. If this equipment does cause harmful interference to radio or television reception, which can be determined by turning the equipment off and on, the user is encouraged to try to correct the interference by one or more of the following measures:

—Reorient or relocate the receiving antenna.

—Increase the separation between the equipment and receiver.

—Connect the equipment into an outlet on a circuit different from that to which the receiver is connected.

—Consult the dealer or an experienced radio/TV technician for help.

FCC Radiation Exposure Statement:

This equipment complies with FCC radiation exposure limits set forth for an uncontrolled environment. This equipment should be installed and operated with a minimum distance of 20cm between the radiator & your body. This transmitter must not be co-located or operating in conjunction with any other antenna or transmitter.

ISED Warning

This device contains licence-exempt transmitter(s)/receiver(s) that comply with Innovation, Science and Economic Development Canada' s licence-exempt RSS(s). Operation is subject to the following two conditions:

(1) This device may not cause interference.

(2) This device must accept any interference, including interference that may cause undesired operation of the device.

L' émetteur/récepteur exempt de licence contenu dans le présent appareil est conforme aux CNR d' Innovation, Sciences et Développement économique Canada applicables aux appareils radio exempts de licence. L' exploitation est autorisée aux deux conditions suivantes :

1) L' appareil ne doit pas produire de brouillage;

2) L' appareil doit accepter tout brouillage radioélectrique subi, même si le brouillage est susceptibled' en compromettre le fonctionnement.

This equipment complies with FCC' s and IC' s RF radiation exposure limits set forth For an uncontrolled environment. The antenna(s) used for this transmitter must be installed and operated to provide a separation distance of at least 20 cm from all persons and must not be collocated or operating in conjunction with any other antenna or transmitter. Installers must ensure that 20cm separation distance will be maintained between the device (excluding its handset) and users.

Cet appareil est conforme aux limites d' exposition au rayonnement RF stipulées par la FCC et l' IC pour une utilisation dans un environnement non contrôlé. Les antennes utilisées pour cet émetteur doivent être installées et doivent fonctionner à au moins 20 cm de distance des utilisateurs et ne doivent pas être placées près d' autres antennes ouémetteurs ou fonctionner avec ceux-ci. Les installateurs doivent s' assurer qu' une distance de 20 cm sépare l' appareil (à l' exception du combiné) des utilisateurs.

Changes or modifications to this unit not expressly approved by the party responsible for compliance could void the user' s authority to operate the equipment.

Version: AX-FLR-A1