Anland Security Technology

Installation and Operation Manual

Description:	Electronic Knob Door Lock
Model No.:	ES0001
Features:	Fingerprint and PIN Code
Material:	Zinc alloy furniture and SUS304 latch
Product Standard Referred:	ANSI/BHMA A156.25

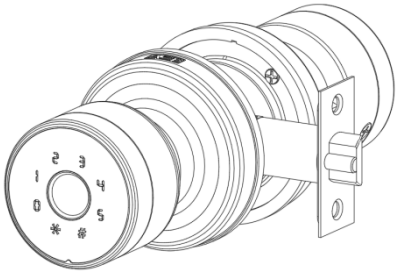

Thanks for choosing our premium quality product of smart home security with innovative design. Please read this manual carefully before installation and use. For any query please contact us by email customers-ast@anlandst.com.

Guangzhou Anland Security Technology (AST) bids to the expert of creating value for customers in security and hardware!

Our Vision

Effective contribution on product value, innovation and customer focus

Our Mission

- **Become customer's reliable partner in innovation**
- **Be the expert of creating value for customers in security and hardware**

Guangzhou Anland ST Co., Ltd

1. PARTS INCLUDED IN THE PACKAGE

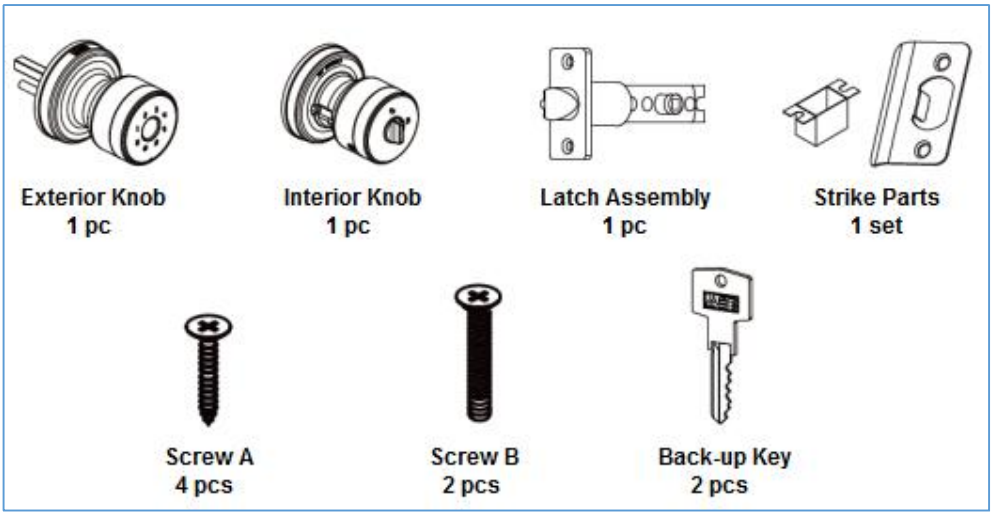

Tools in need but not included in the package: ① Phillips screwdriver; ② Tape measure

2. PRODUCT CONFIGURATION AND INDICATING LIGHT

2.1. A configuration of product and part's description are as below image.

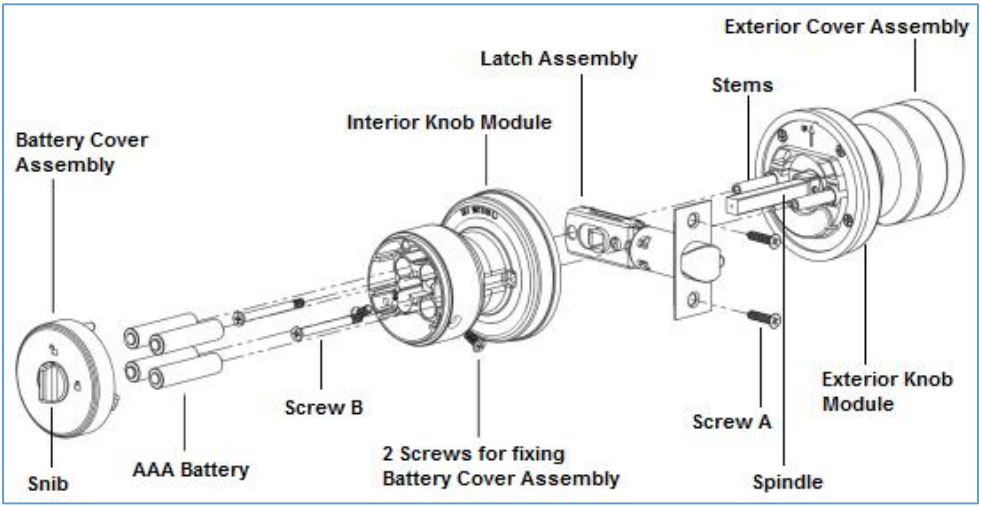

2.2. There are different indicating lights during setting and operating

2.2.1 Add Fingerprint

The Fingerprint reader light turns to blue as to indicate the lock is ready to input new

Fingerprint, please put your finger on the Fingerprint reader on Exterior Cover Assembly.

2.2.2. Fingerprint identifying or mobile phone APP unlocking

Green light: success (the buzzer beeps once, and the Fingerprint reader light flashes green.)

Red light: failed (the buzzer beeps twice， the Fingerprint reader light flashes red.)

2.2.3. Low power of batteries

When the lock is unlocked with Fingerprint or mobile APP, the buzzer beeps once and Fingerprint reader light flashes green and red.

3. PRODUCT OUTLINE DIMENSIONS

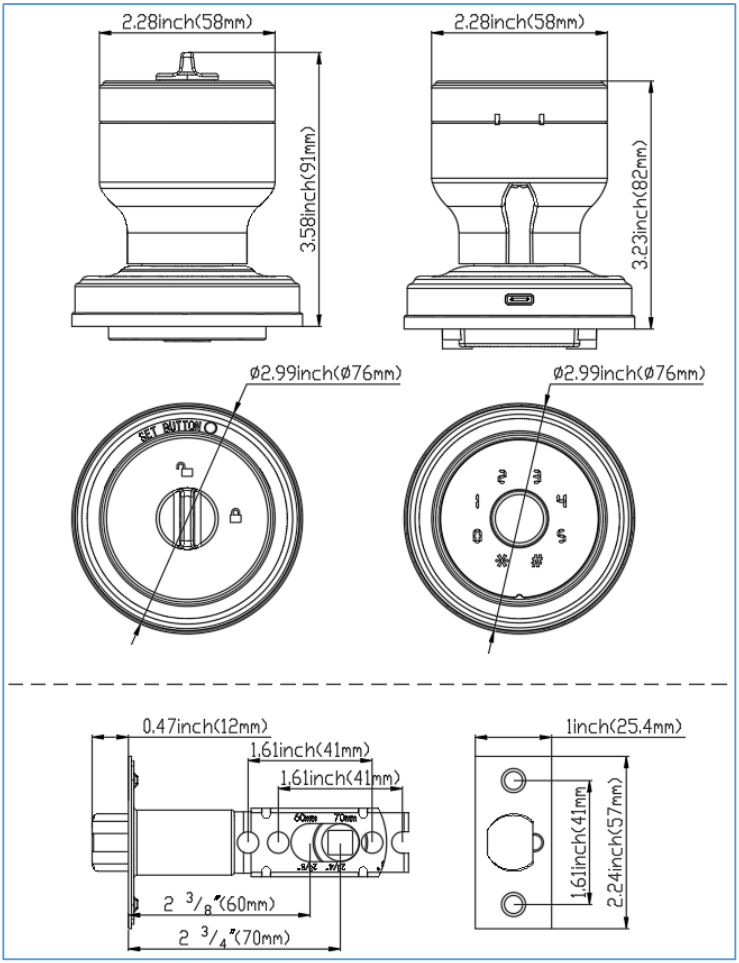

4. CUT-OUT OF DOOR FOR INSTALLATION

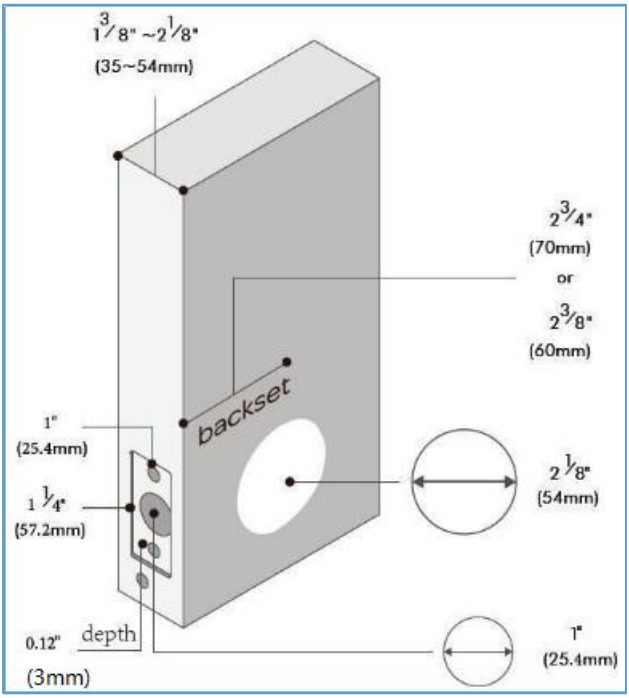

Please be noted that the Latch backset can be interchangeable (60mm/70mm)

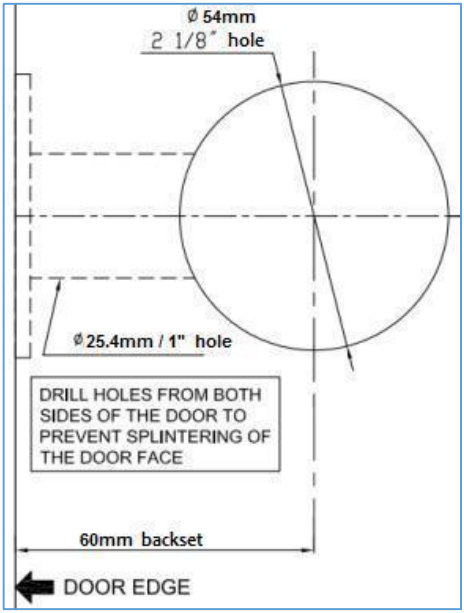

5. INSTALLATION OF LATCH ASSEMBLY AND STRIKE PARTS

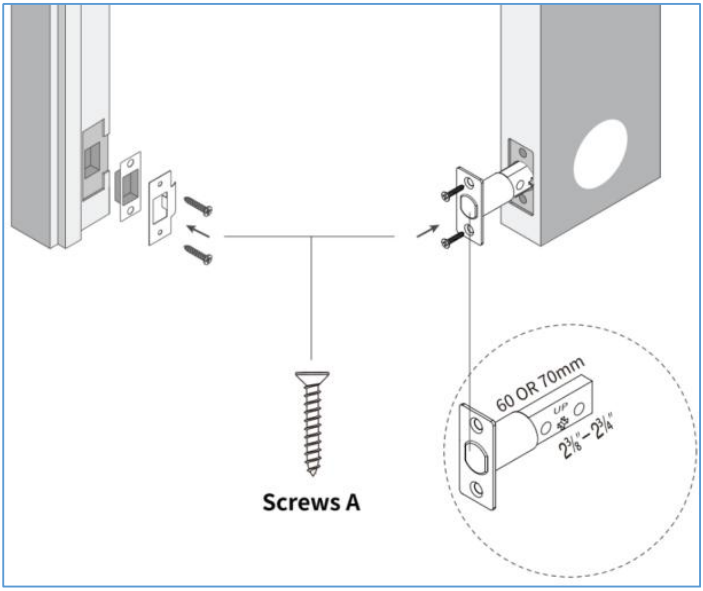

Set the backset of Latch Assembly to 60mm or 70mm to fit your door hole as above image, then insert the Latch Assembly into the door hole, and drive screw A to fix the Latch Assembly, then install Strike Box and Strike Plate with screw A into the door frame.

6. INSTALLATION OF INTERIOR AND EXTERIOR KNOB MODULES

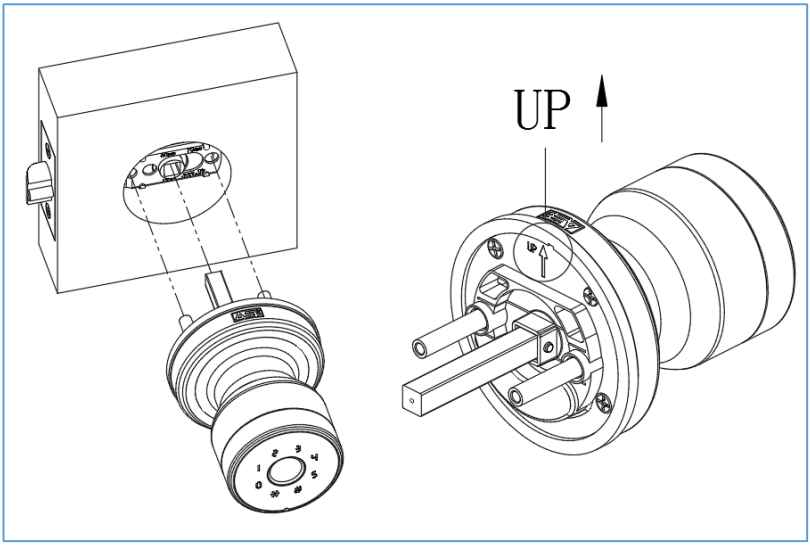

Install Exterior Knob Module (with Touch pad and Fingerprint reader) as above image from inside of your door, and make sure the Spindle and Screw Stems go through the three holes of the Latch.

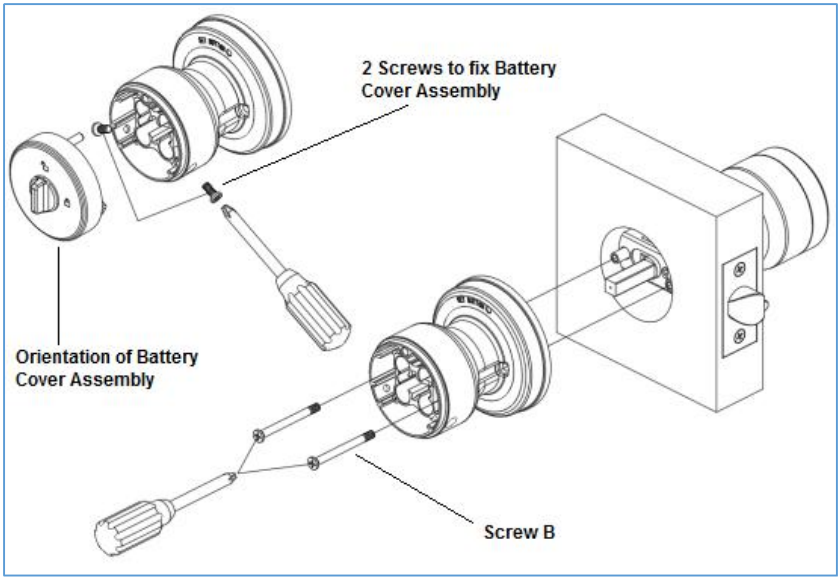

Insert Interior Knob Module by aligning the two stems with the screw holes as above image, connect the cable by inserting the connector into the socket, and drive Screw B to fix Exterior and Interior Knob Modules.

7. IINSTALLING OF BATTERIES (4 EA OF AAA, NON-RECHARGEABLE)

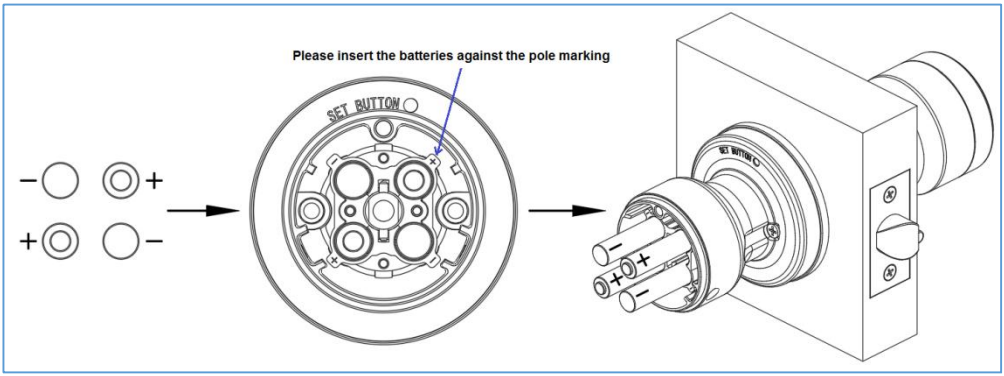

Undrive the 2 screws at side face of Interior Knob Module to dismount the Battery Cover Assembly, then insert 4 ea of AAA batteries and drive the screws to fix the Battery Cover Assembly. **Important Note:** please do not use rechargeable battery, and make sure the pole of batteries at right direction as shown by above image.

8. CHECKING OF FUNCTIONS

8.1. After the Lockset is installed, please check the functions by Internal Snib as below image, to make sure the lock's mechanism is working properly.

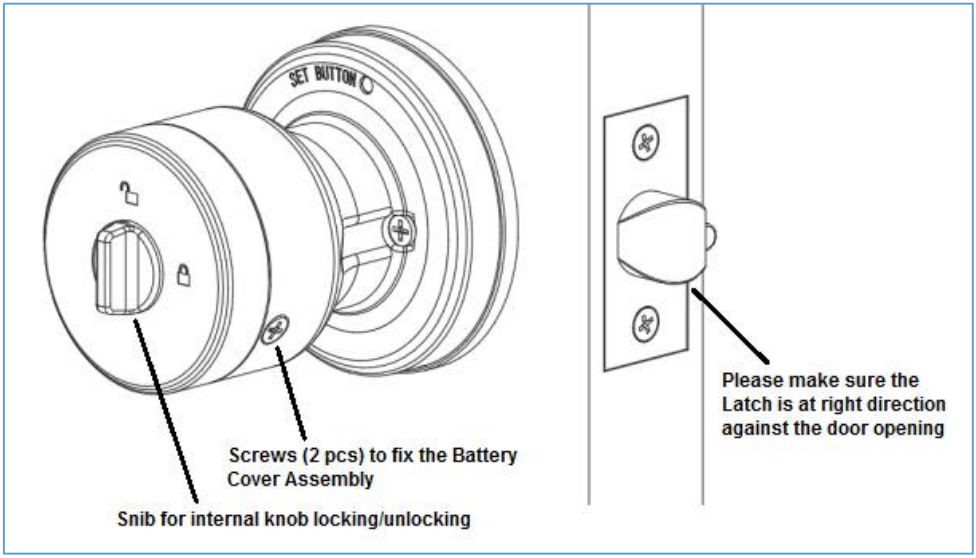

8.2. Wake up the Touch pad and input the right PIN code (inputting **8** digits and click "#" as a confirmation). The keys visible * means "delete" and # means "confirm". Defaulted PIN Code is **012345**, it will become invalid once the new PIN Code is set by the APP of mobile which is connected to the Lockset (through Bluetooth).

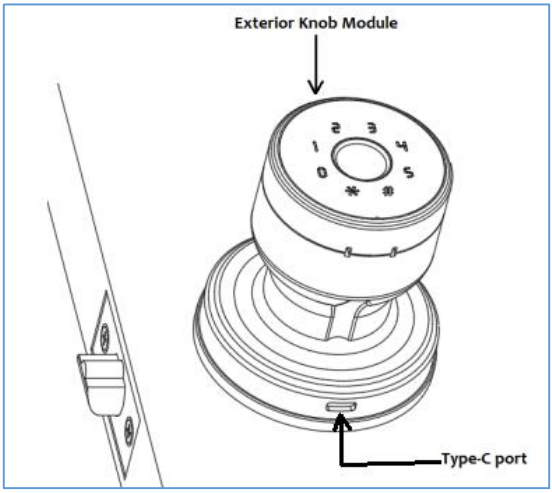

8.3. Please check above Type-C port for power supply of contingency as above image.

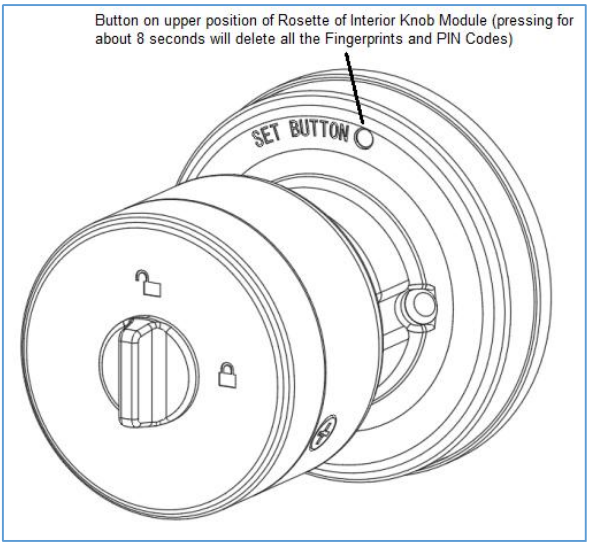

8.4. Press the Set button on the rosette of Interior Module for 8 seconds as above image, the buzzer will beep once and the Fingerprint reader will flash green. The lock will be reset to factory settings, then all the stored data will be wiped and new Fingerprint/PIN code will be required per the process of APP setting.

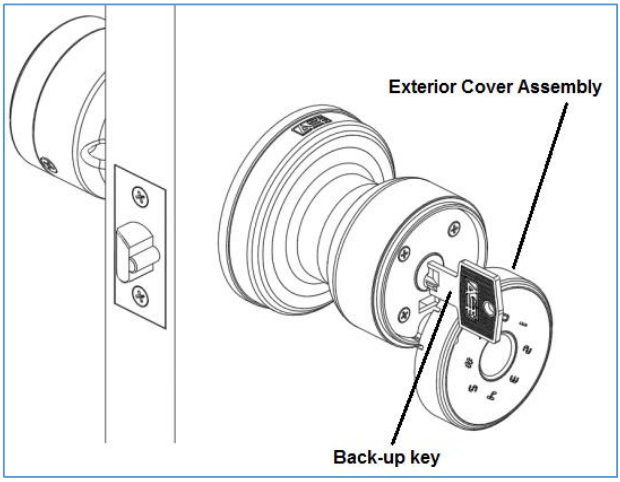

8.5. Pull the Exterior Cover Assembly of Exterior Module out and insert the back-up key to check locking/unlocking function as above image.

9. INSTALLATION OF APP

9.1. Download / Install the APP by mobile / IPAD

Scan the below QR code to download the Tuya Smart APP, or search “Tuya Smart”

in the APP Store (iOS) or Google Play (Android) to install the APP.

Scan to download Tuya Smart

Download it from APP STORE

Download it from GOOGLE PLAY

9.2. Register an account

Register a account and endorse the statements, press “Agree” and “Sign Up” on the login screen if no objection as below images.

Note: the first one to connect the Lockset by APP will be recognized as Master User. Such record can be removed by resetting the lock by pressing 8 seconds to the Reset Button.

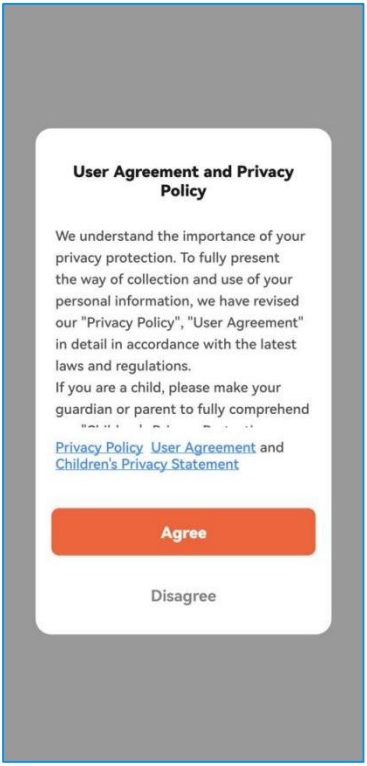

Choose the country where the Lockset will be used, enter your Email address to get verification code, set password, select permissions and press “Go to APP” to finish the registration as below images.

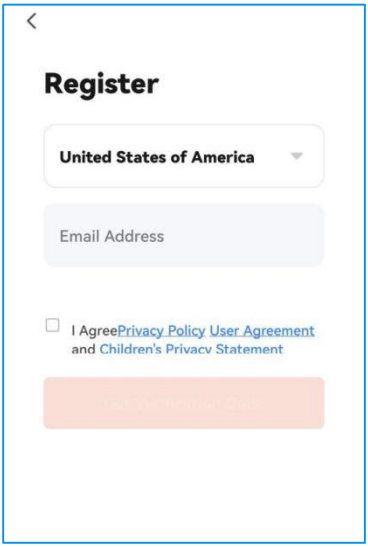

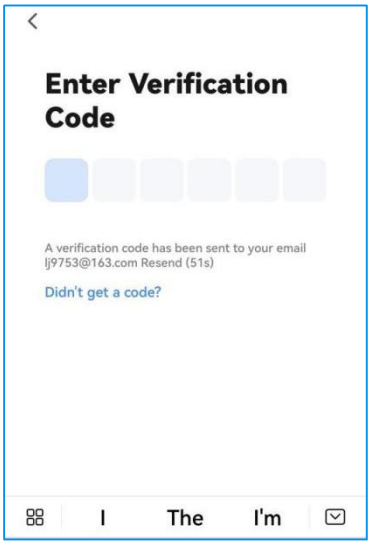

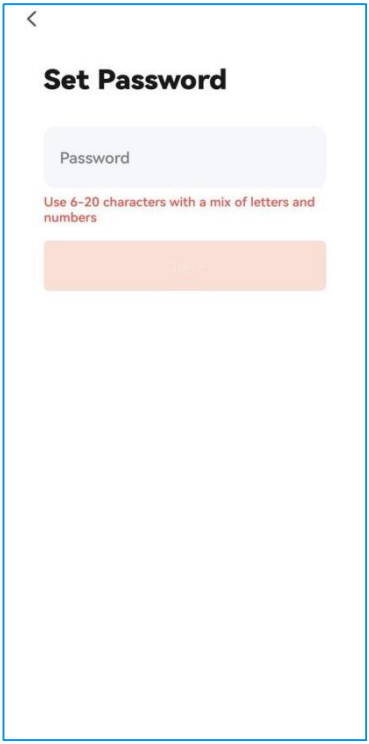

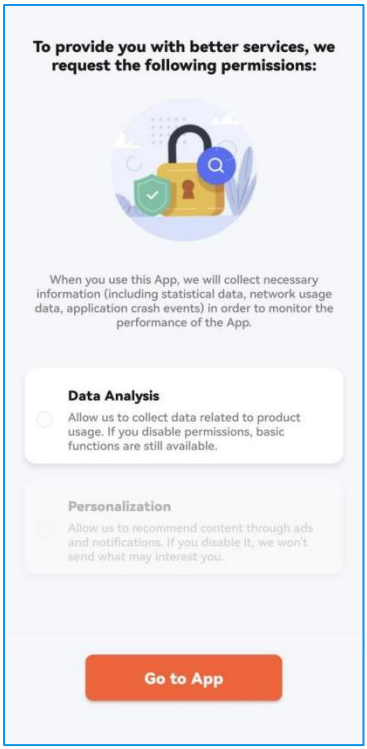

9.3. Connect the Lockset to your APP

Turn on the Bluetooth of your mobile phone, keep it close to the Lockset (2~7 meters), then touch the Fingerprint reader to motivate the lock, and press the "Add Device" on the APP screen. Prior to scanning nearby devices, please turn on the permission as below images of APP.

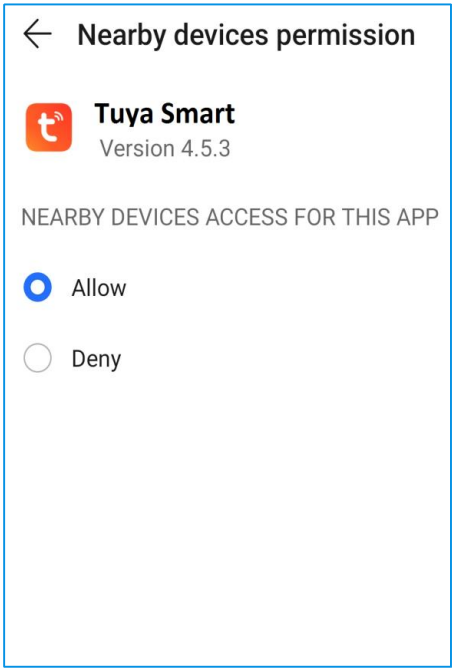

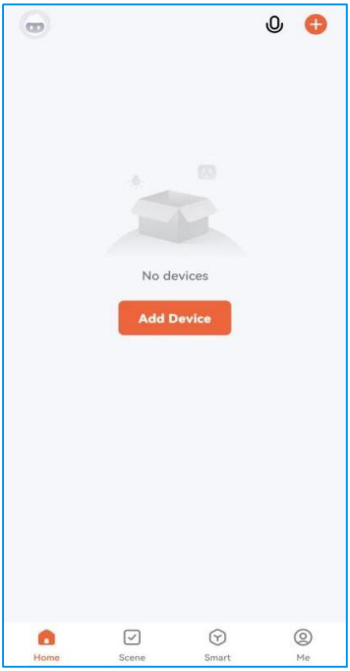

9.4. Click “Add” and “+” to connect the Lockset you want to set up as below images

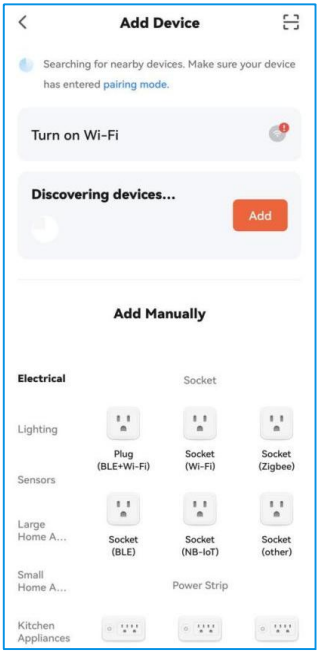

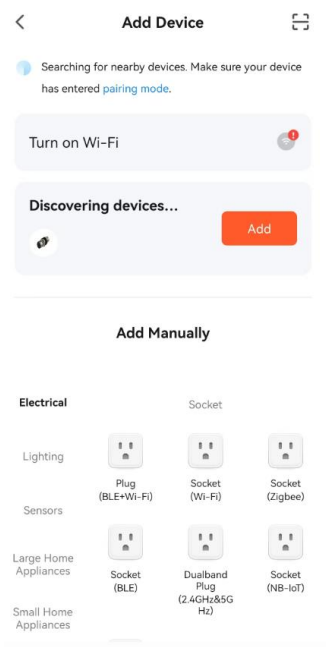

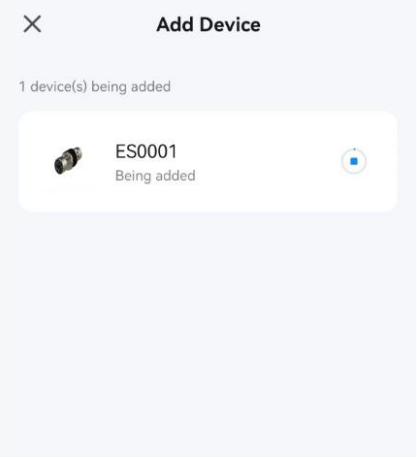

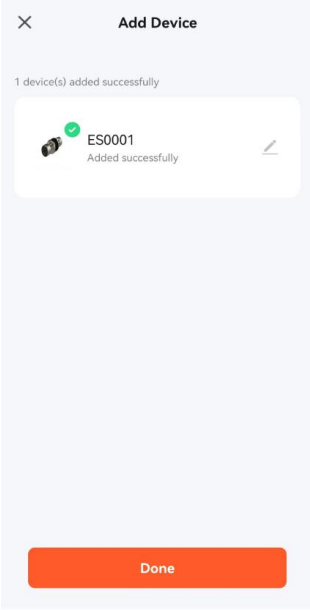

9.5. Press “ ”to rename the Lockset if you want. Now the Lockset is ready for use via APP.

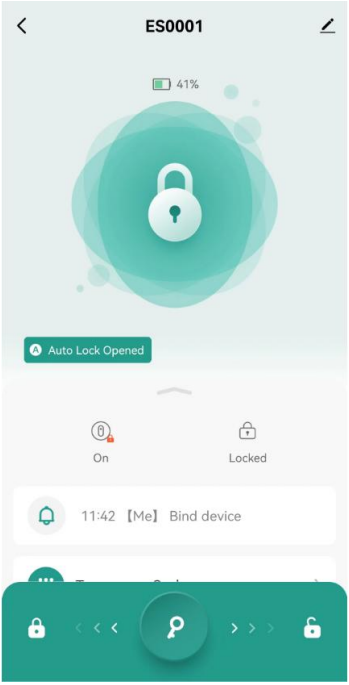

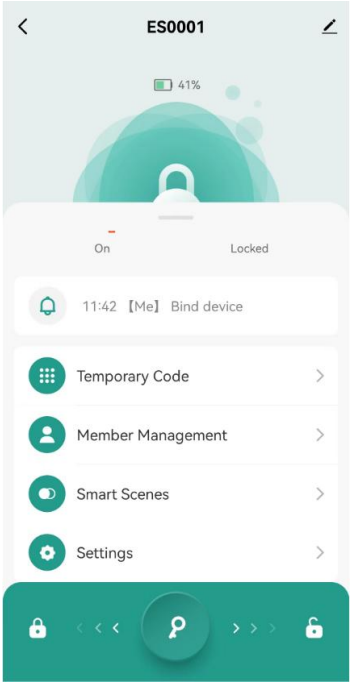

9.6. Control the Lockset via APP

Click and drive the key icon “ ” from left to right “ ” position for unlocking the door as below images.

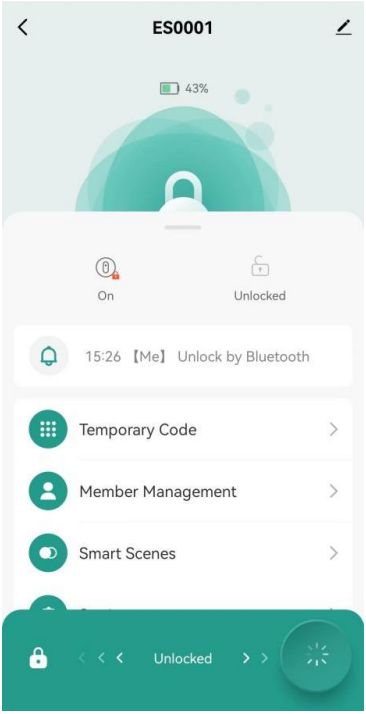

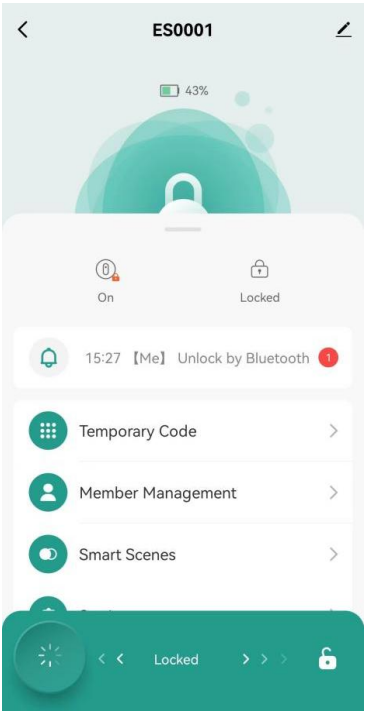

9.7. Member management and Fingerprints / PIN Code input

Select “Member Management” on the APP screen. To click “Me” and follow the APP instructions to add Fingerprint (similar to add the PIN Codes).

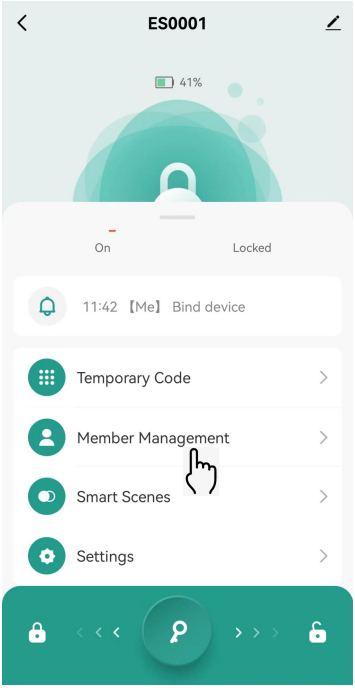
ES0001
41%
On
Locked
11:42 【Me】 Bind device
Temporary Code
Member Management
Smart Scenes
Settings

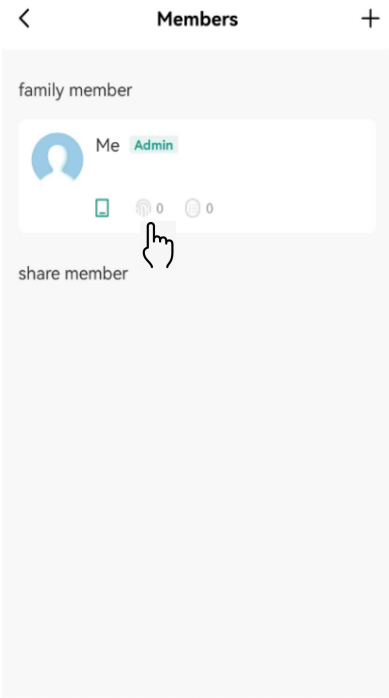
Members
family member
Me Admin
0
0
share member

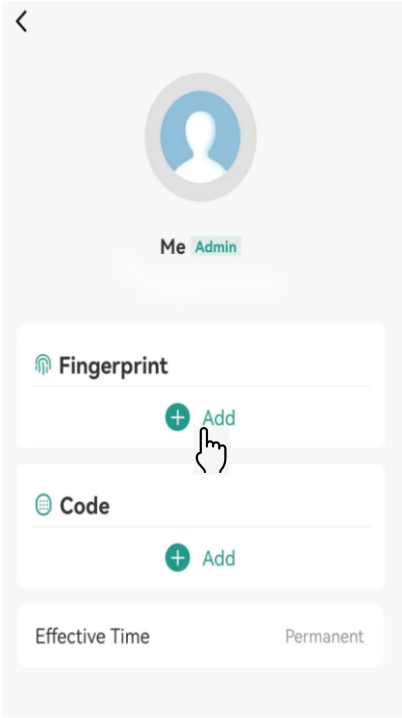
Me Admin
Fingerprint
Add
Code
Add
Effective Time
Permanent

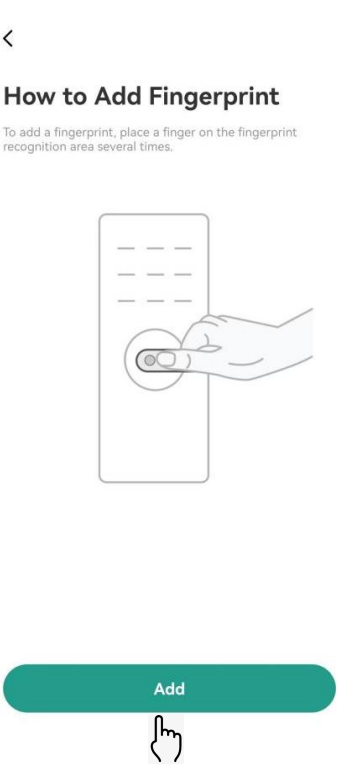
How to Add Fingerprint
To add a fingerprint, place a finger on the fingerprint recognition area several times.
Add

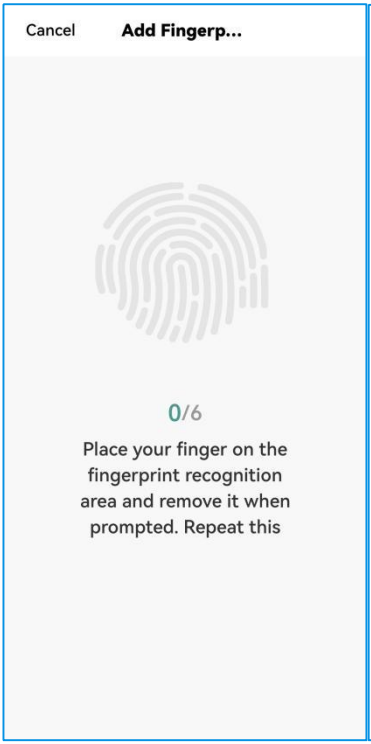
Cancel
Add Fingerp...
0/6
Place your finger on the fingerprint recognition area and remove it when prompted. Repeat this

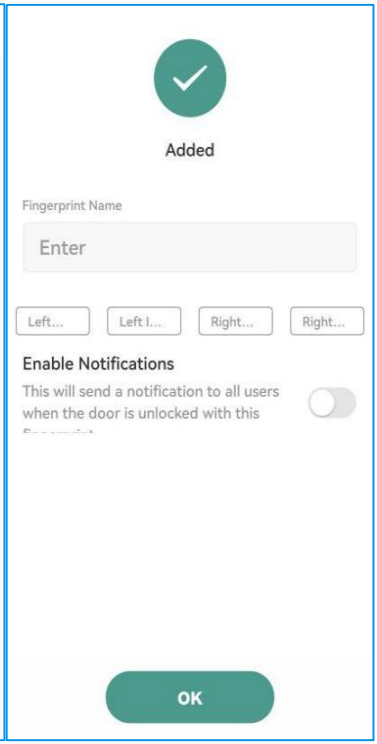
Added
Fingerprint Name
Enter
Left...
Left I...
Right...
Right...
Enable Notifications
This will send a notification to all users when the door is unlocked with this
OK

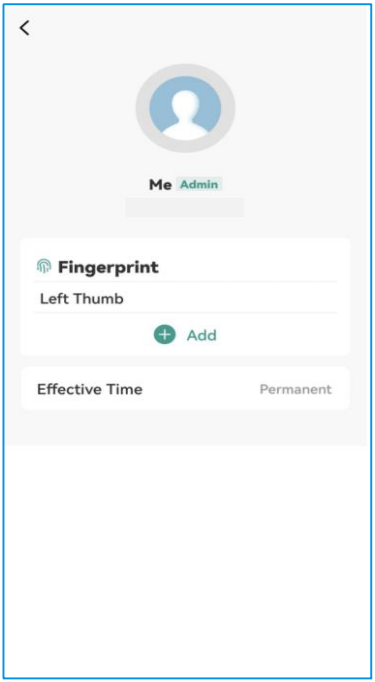
Me
Admin
Fingerprint
Left Thumb
Add
Effective Time
Permanent

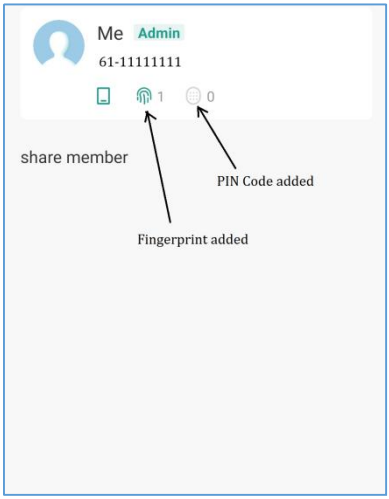
Me
Admin
61-11111111
1
0
share member
PIN Code added
Fingerprint added

Click “+” to add more PIN Codes of member.

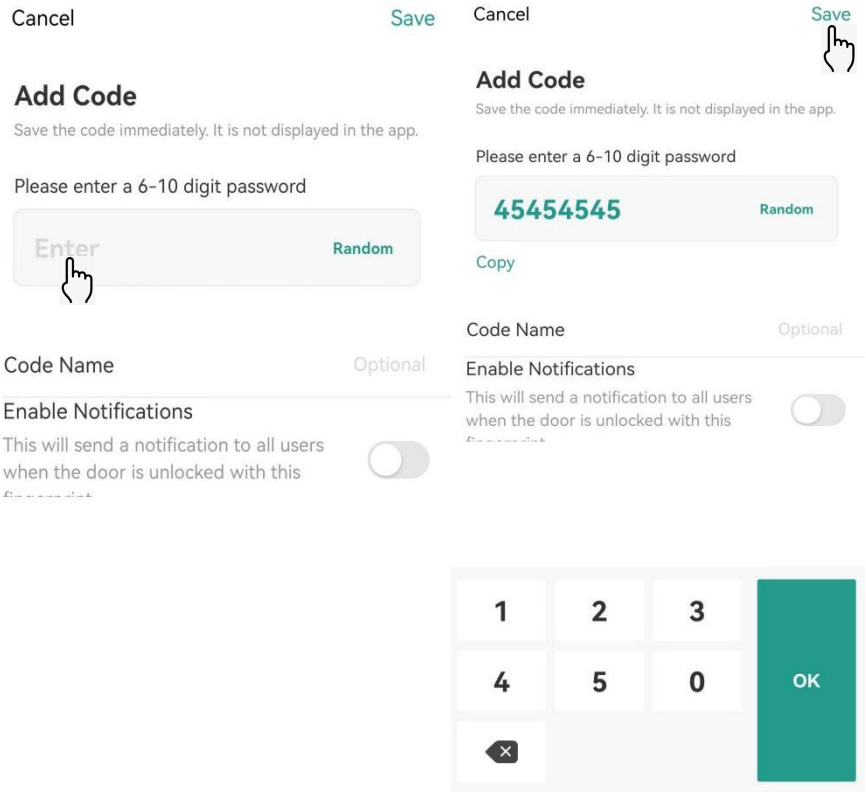

Important Note: proper Fingerprint inputting is critical to access verification, most of the failures of Fingerprint identification are because of improper Fingerprint inputting, please make sure your finger is clean and positioned on Fingerprint reader precisely.

9.8. Create smart scenes

Select “Smart Scenes” on the APP screen, choose the scenes you prefer to set intelligent interactions.

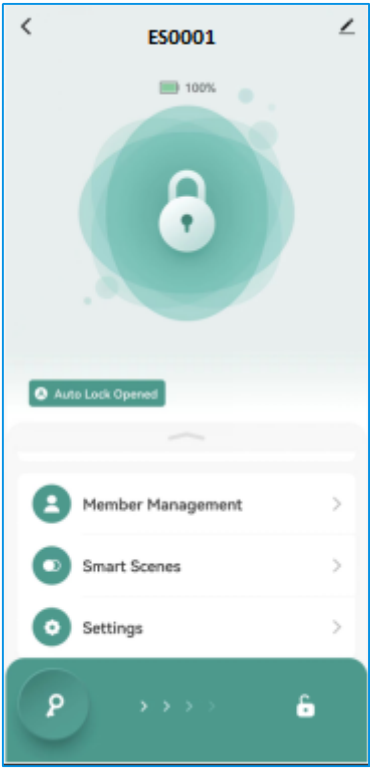
ES0001
100%
Auto Lock Opened
Member Management
Smart Scenes
Settings

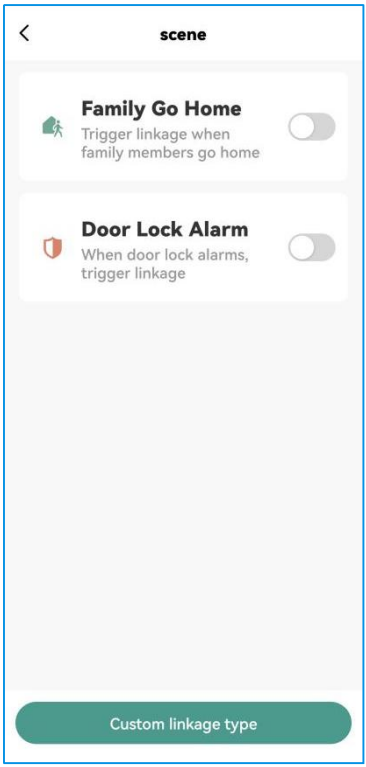
scene
Family Go Home
Trigger linkage when family members go home
Door Lock Alarm
When door lock alarms, trigger linkage
Custom linkage type

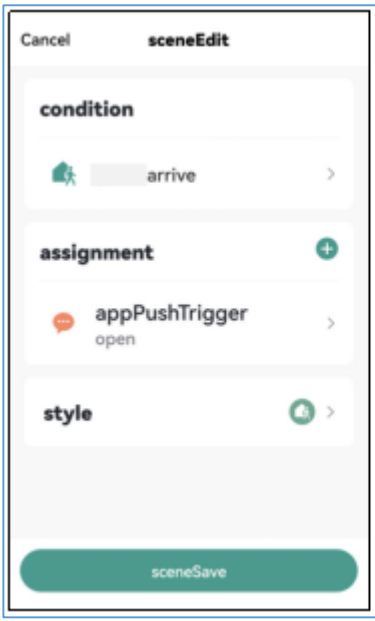
Cancel
sceneEdit
condition
arrive
assignment
appPushTrigger
open
style
sceneSave

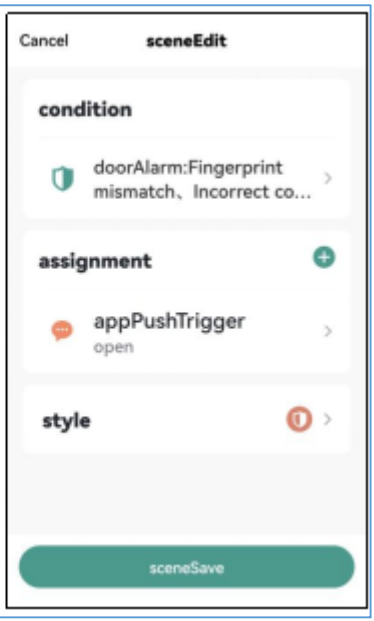
Cancel
sceneEdit
condition
doorAlarm:Fingerprint mismatch、Incorrect co...
assignment
appPushTrigger
open
style
sceneSave

9.9. Setting

Select “Settings” on the APP screen to turn on/off “Auto Lock” or set the time delay, or turn on/off “Do-Not-Disturb”.

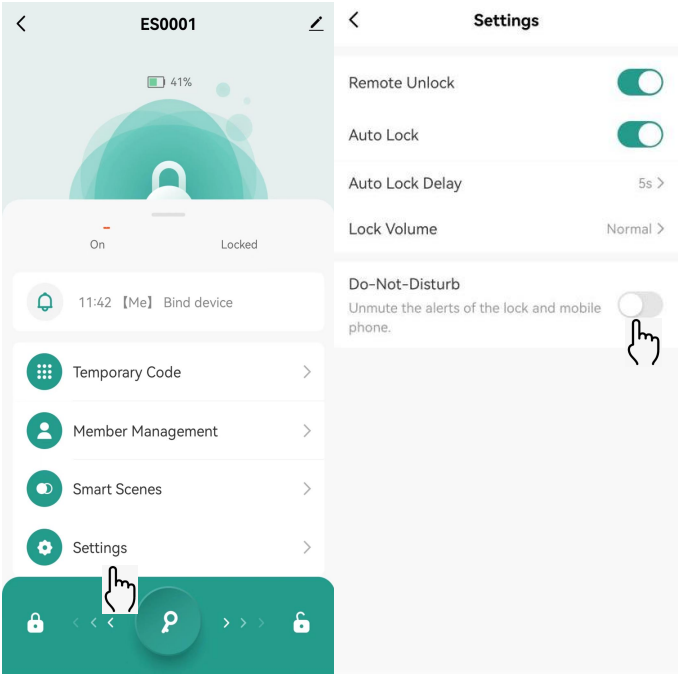

9.10. Device information setup

Click the icon “ ” on the top right corner of the APP screen to check and set the relevant information。

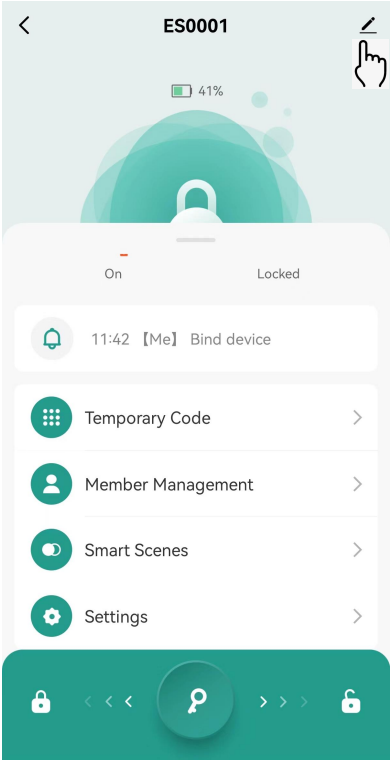

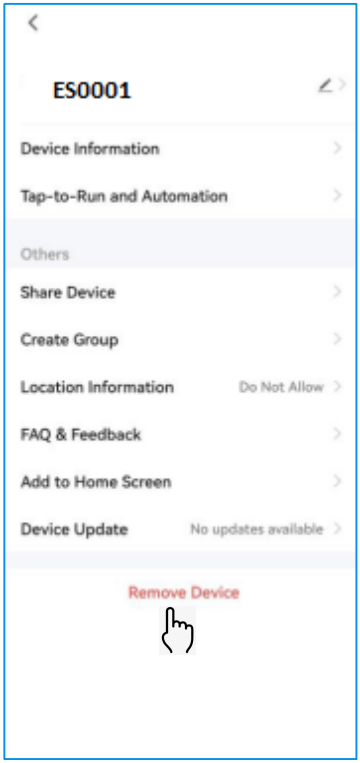

10. TECHNICAL SPECIFICATION

No.	Parameter	Specification
1	USB power supply	Type-C / 5V2A
2	Fingerprints max.	18
3	PIN Codes max.	20
4	Low power warning	4 .8V±0 .2
5	Voltage range	4 .5~6 .5V
6	Stand-by current	Under 90uA
7	Working current	<250mA
8	Unlocking time	≈1 .5 sec
9	Recommended working temperature	5~131 °F (-15~55°C)
10	Door thickness	1 3/8"~ 2 1/8" (35-54mm)
11	Material	Furniture parts made of Zinc alloy and Latch made of SS304
12	Power	4ea AAA alkaline batteries

Remark: normally 4ea AAA batteries can support the lock to work for more than 10 months, anyway this is subject to quality of batteries and frequency of lock usage.

11. POPULAR QUESTIONS AND ANSWERS

Q1: Dose ES0001 lock work with third-party parts like Latch Assembly?

A1: It is recommended to use the original parts for best performance and premium quality level.

Q2: What notification will I receive when the battery voltage runs to a low level?

A2: After the Fingerprint identification or mobile APP are successfully operated (the buzzer beeps once, the Fingerprint reader flashes green and red). When you unlock the device through mobile App, you will receive a notification message for low battery warning.

Q3: How can I unlock ES0001 lock if battery runs out?

A3: Connect a power bank to the exterior Knob Module with Type-C cable as to activate for

emergency access, then use Fingerprint reader or PIN Code for normal access operation. If this is still not working, please pull out the Exterior Cover Assembly and rotate it to dispose the back-up cylinder for key unlocking.

Q4: If I order 3 locks will all they have the same key code?

A4: Each set of lock is keyed differently.

Q5: If accidentally the lock is deleted from mobile app, what should I do?

A5: If you delete the lock in mobile app, while the lock can be still working, please reset the lock and connect it to mobile APP again.

Q6: My Bluetooth won't connect, what should I do?

A6: 1. Upgrade to the latest version of the APP, authorize Bluetooth in the phone settings to allow access to the Tuya App, then try to connect again with the designated distance range. If the connection between Lockset and APP is still not successful, please contact our customer service (customers-ast@anlandst.com) for technical support.

Q7: What notification will I receive when the battery voltage is low?

A7: When you use Fingerprint or mobile APP to unlock, the LED Indicator will flashes green and red as a warning signal. The remaining power can still provide about 500 times of unlocking even the warning signal happens, please replace battery within couple of days.

Q8: How to enable passage mode?

A8: Press set button on Interior Knob Module, then unlock the knob by Fingerprint identification, after buzzer beeps, passage mode enabled. Or you can enter "Setting" page in mobile APP, enable the passage mode.

Q9: How to disable passage mode?

A9: Press set button on Interior knob Module, the passage mode will be disabled. Or you can enter "Setting" page in mobile APP, disable the passage mode.

Q10: What is the difference between administrator (master)/normal user?

A10: The first user to add the lock by mobile APP will be set as administrator (master), other members are normal users. Administrator's Fingerprint can unlock even in the security mode, but normal user cannot unlock in the security mode.

12. FCC WARNING

Any Changes or modifications not expressly approved by the party responsible for compliance could void the user's authority to operate the equipment.

Note :

This equipment has been tested and found to comply with the limits for a Class B digital device, pursuant to part 15 of the FCC Rules. These limits are designed to provide reasonable protection against harmful interference in a residential installation . This equipment generates uses and can radiate radio frequency energy and, if not installed and used in accordance with the instruction, may cause harmful interference to radio communications. However, there is no guarantee that interference will not occur in a particular installation. If this equipment does cause harmful interference to radio or television reception, which can be determined by turning the equipment off and on, the user is encouraged to try to correct the interference by one or more of the following measures:

- Reorient or relocate the receiving antenna.
- Increase the separation between the equipment and receiver.
- Connect the equipment into an outlet on a circuit different from that to which the receiver is connected.
- Consult the dealer or an experienced radio/TV technician for help.

Warning: changes or modifications not expressly approved by the party responsible for compliance could void the user's authority to operate the equipment

The devices has been evaluated to meet general RF exposure requirement， the device can be used in portable exposure condition without restriction

Anland Security Technology

Revision: NR

Language: English

Size: A5 (14.8 X 21.0 cm)

Remark: this document may be subject to change without notice

Guangzhou Anland ST Co., Ltd