PHILIPS

Home Access

Smart deadbolt
Serrure intelligente
Cerradura inteligente

4200 series
DDL242X-1HW

EN **User Manual** 02
FR **Mode d'Emploi** 27
ES **Manual del usuario** 52

www.philips.com/support

Contents EN

Introduction 02

1 Warnings & Safety 02

Safety
Caution
Returns & Disposal

2 How to Install 03

Parts List
Assembly View
Install the Lock
Remove the Batteries

3 How to Setup 13

Download the Philips Home Access App
Create a User Account
Add the Device

4 How to Use 14

Feature Definitions
Factory Reset & Default Settings
Credential Type and Maximum Capacity
Program the Lock
Lock & Unlock

5 Troubleshooting 22

6 Warranty 24

7 FCC Statement 25

8 ISED Statement 25

Introduction

Congratulations on your purchase and welcome to Philips Smart Security family!

To fully benefit from the support that Philips Home Access offers, register your product at **www.philips.com/myphilips**

Register your product

- Keep track of your product warranty coverage
- Qualify for cash-back, gifts and special offers
- Get easy access to product support

1 Warnings & Safety

Safety

- Before using this product, please read and understand all instructions. Damage caused by failure to follow the instructions is not covered by the warranty.
- Only use components the manufacturer provided and suggested accessories.
- Only use AA alkaline batteries.
- Do not forcibly disassemble the product to trigger an alarm or damage the product.
- Do not scrape the fingerprint sensor with sharp objects as this may cause permanent damage.
- Do not remove the batteries during lock setup and operation.
- Change the default master PIN code immediately via the Philips Home Access app after completing the installation.

Caution

- Do not place the batteries near fire sources.
- Do not connect the 2 poles of the batteries to metals to avoid a short circuit and potential explosion.
- Any replacement component should be performed by Philips, a Philips-authorized service center, or a professional technician.
- Do not use parts or accessories manufactured by others, except batteries.
- Do not expose products to places that have water leakage or splashing.

Returns & Disposal

- Locks can be returned at an authorized Philips service center. Appropriate compensation will be provided if the returned product meets Philips's conditions.
- Please follow local regulations and do not throw the used products or batteries into normal household waste.

2 How to Install

Parts List

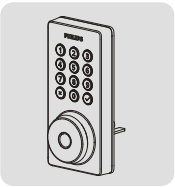

① Exterior Assembly

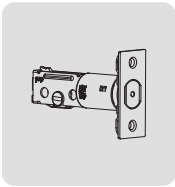

② Latch Bolt

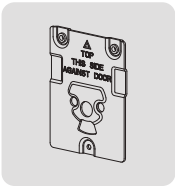

③ Mounting Plate

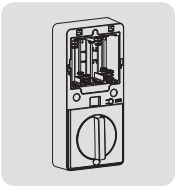

④ Interior Assembly

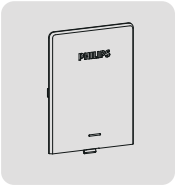

⑤ Battery Cover

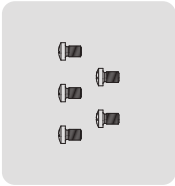

⑥ Interior Assembly Screws (5) (2 Spare)

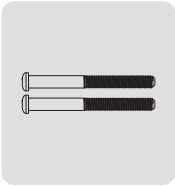

⑦ Mounting Plate Screws (2)

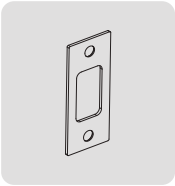

⑧ Strike Plate

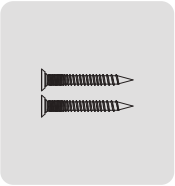

⑨ Strike Plate Screws (2)

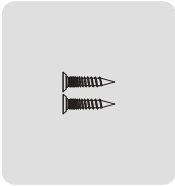

⑩ Latch Bolt Screws (2)

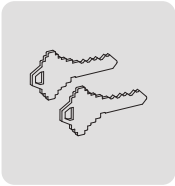

⑪ Mechanical Keys

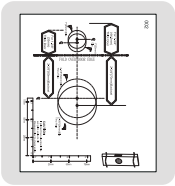

⑫ Drilling Template

⑬ User Manual

⑭ Quick Start Guide

*8 AA alkaline batteries are required and need to be purchased separately.

Assembly View

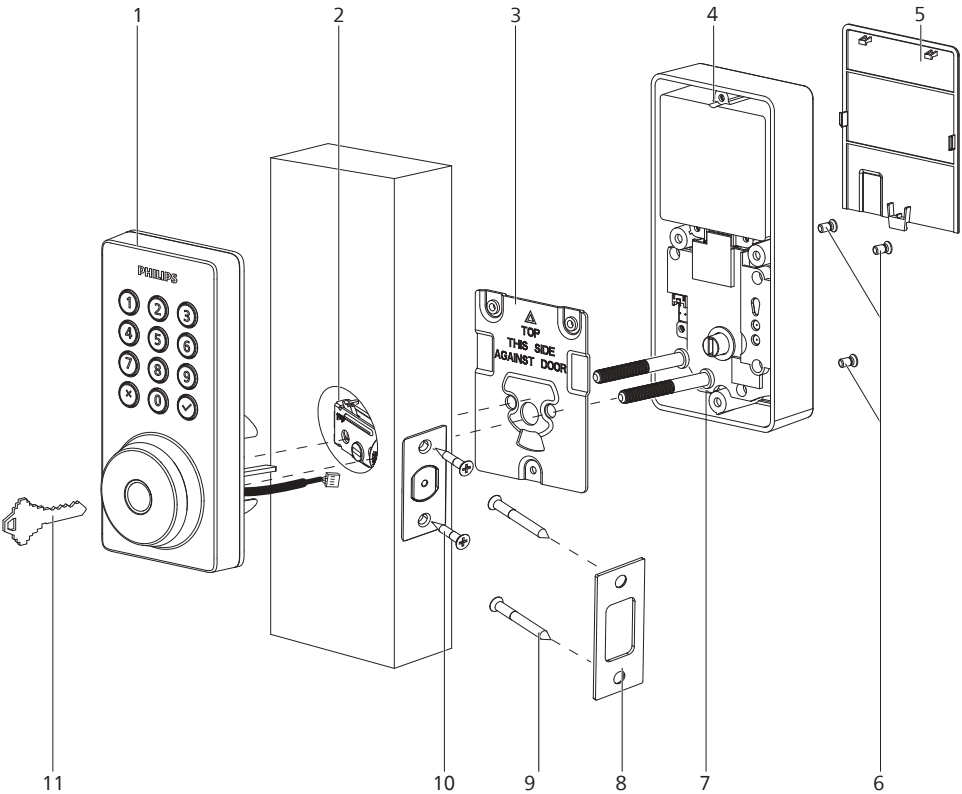

1. Exterior Assembly
2. Latch Bolt
3. Mounting Plate
4. Interior Assembly
5. Battery Cover
6. Interior Assembly Screws (3)
7. Mounting Plate Screws (2)
8. Strike Plate
9. Strike Plate Screws (2)
10. Latch Bolt Screws (2)
11. Mechanical Keys (2)

Exterior Assembly

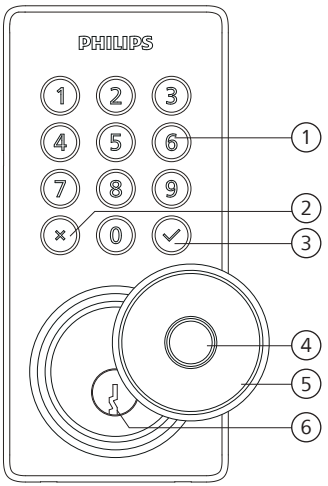

1	Keypad
2	Cancel Key
3	Confirm Key with Backlit Indicator
4	Fingerprint Sensor
5	Keyhole Cover
6	Keyhole

Interior Assembly

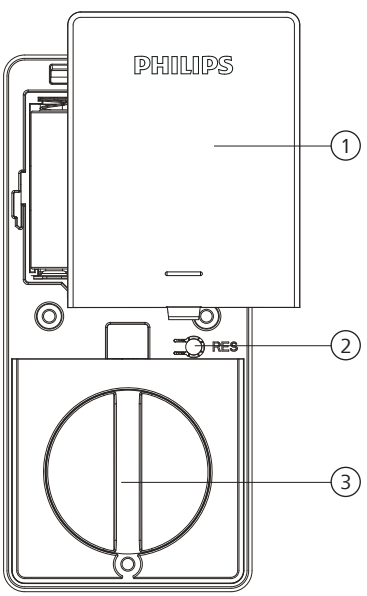

1	Battery Cover
2	Reset Button
3	Thumb Turn

Install the Lock

Required Tools

#2 Phillips Screwdriver

8 AA alkaline batteries (purchased separately)

Prepare the Door and Check the Dimensions

① Measure to confirm that the hole in the door is 1-1/2'' or 2-1/8" (38mm or 54mm).

Measure to confirm that the hole in the door edge is 1" (25mm).

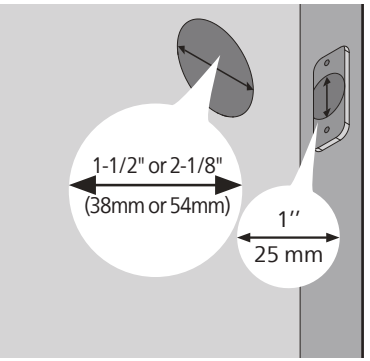

② Measure to confirm that the backset is either 2-3/8" or 2-3/4" (60mm or 70mm).

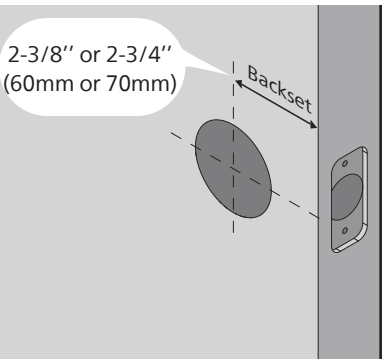

③ Measure to confirm that the door is 1-3/8" to 2" (35mm to 50mm) thick.

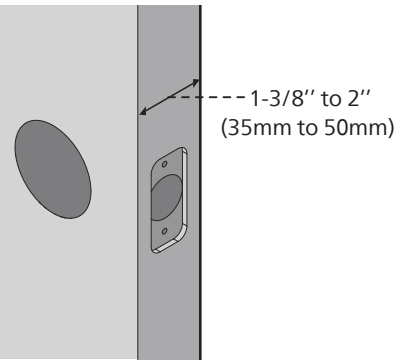

④ Make sure the hole in the door frame is drilled a minimum of 1'' (25mm) deep to leave enough space for the deadbolt to extend into the door frame when the door is locked.

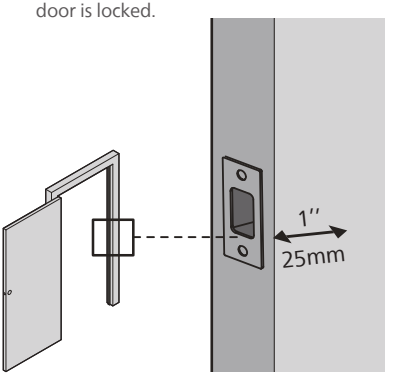

⚠ Attention

Make sure the door frame is aligned with the door and there are no obstructions in the door frame.

⑤ Determine the backset and adjust the Latch Bolt.

Hold the Latch Bolt in front of the door hole, with the Latch Bolt face flush against the door edge. Is the slotted hole centered in the door hole?

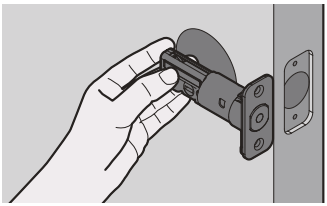

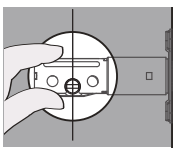

YES

No adjustment is required.

Proceed to the next step.

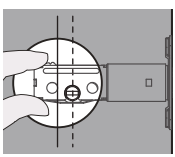

NO

The slotted hole is NOT centered.

Rotate and pull the Latch Bolt as shown to extend it.

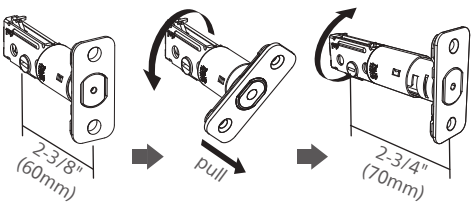

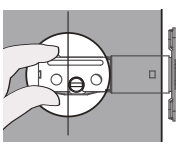

NO

For a 1-1/2" (38 mm) bore hole, use a 1" (25 mm) Drill Bit to extend the latch hole at least 13/64" (5 mm) deep.

No need to extend the latch hole for a 2-1/8" (54 mm) bore hole.

After extending the latch hole, insert the Latch Bolt again to ensure it fits correctly.

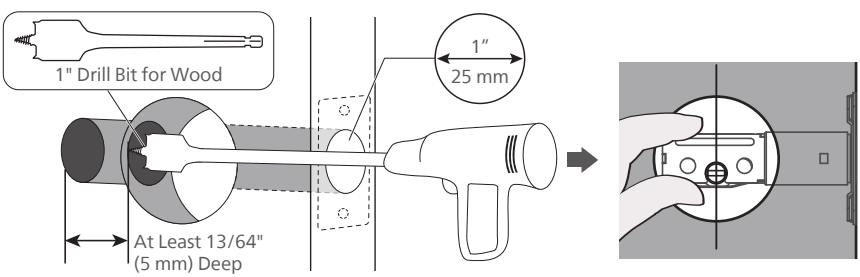

---

⑥ Install the Latch Bolt.

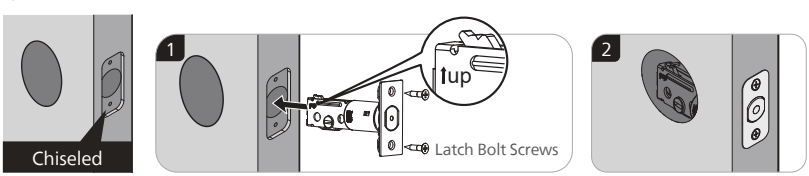

⑦ Install the Latch Bolt and rotate it with a screwdriver to confirm smooth rotation.

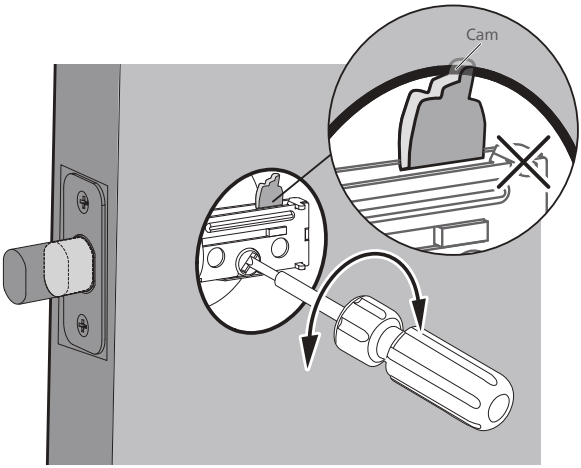

If it cannot rotate smoothly because the door hole is too small.

Remove the Latch Bolt and chisel out a small channel at the top of the hole to give the cam of the Latch Bolt room to rotate.

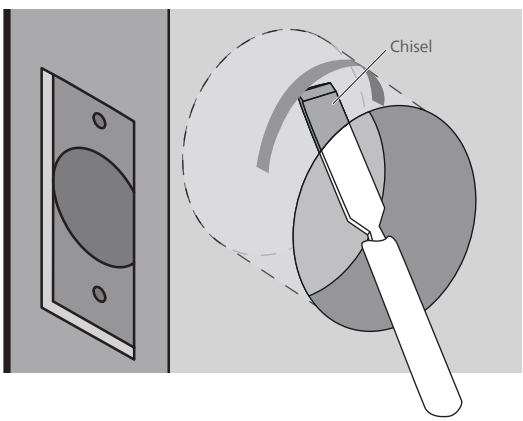

⑧ Install the Strike Plate on the door frame.

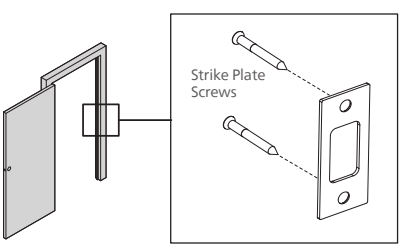

⚠ Attention

Make sure the hole in door frame is drilled a minimum of 1"(25mm) deep.

Install the Exterior Assembly

⚠ Attention

Before installing the Exterior and Interior Assembly, make sure the Latch Bolt is fully retracted (in the unlocked position).

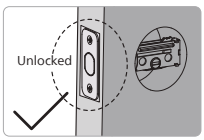

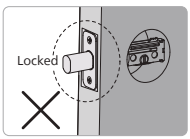

Do not insert the key when you are installing.

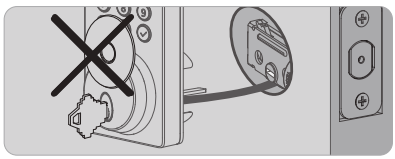

Measure the diameter of the hole in the door.

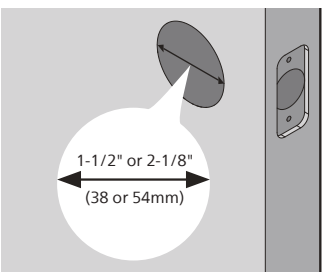

1-1/2" (38mm)

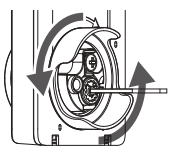

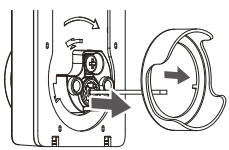

Remove the spacer

2-1/8" (54mm)

Proceed to next step

---

⑨ With the Latch Bolt fully retracted (in the unlocked position), route the cable beneath the Latch Bolt, and insert the tailpiece through the slot in the Latch Bolt.

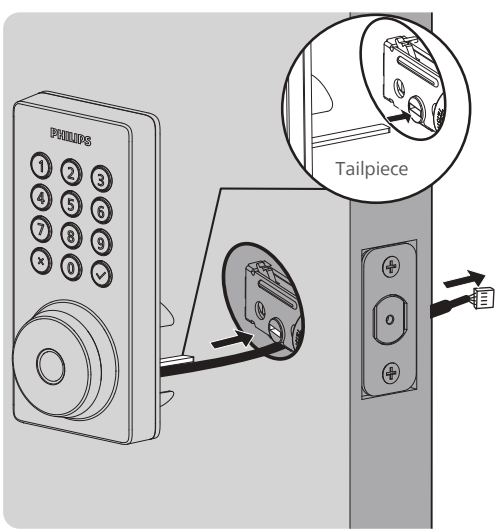

⑩ Secure the Mounting Plate with the Mounting Plate Screws. Do not overtighten screws.

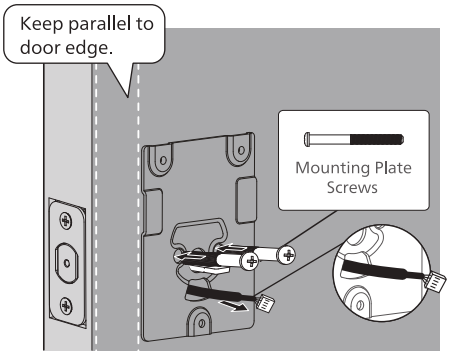

⚠ Attention

Route the cable through the hole in the mounting plate.

Install the Interior Assembly

⑪ Push the Battery Cover up in the direction as illustrated.

⚠ Attention

Do not load batteries before finishing the lock installation.

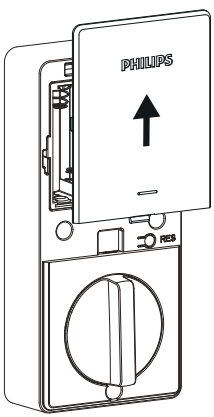

⑫ Insert the cable connector of the Exterior Assembly to the socket on the Interior Assembly. Push the connector in firmly until it is completely attached.

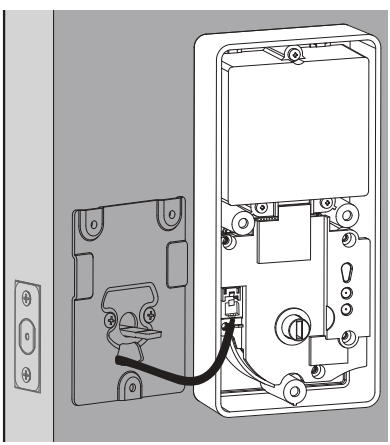

⑬ Keep the Thumb Turn in the vertical position and the tailpiece horizontal, then install the Interior Assembly.

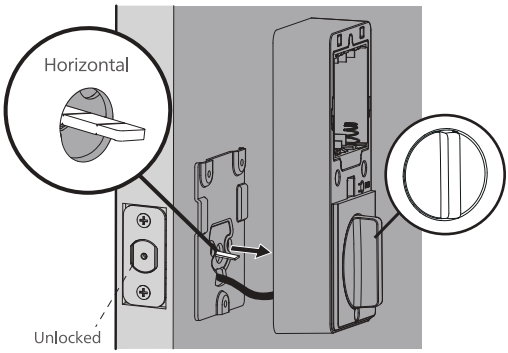

⑭ Attach the interior assembly to the mounting plate and secure it with 3 interior assembly screws.

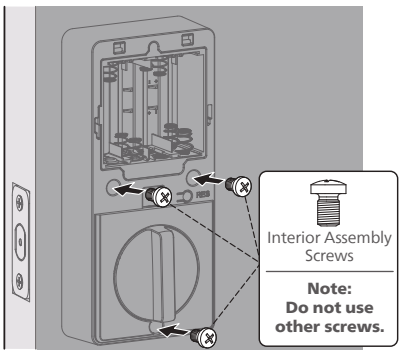

⑮ Install the AA alkaline batteries according to the direction guide inside the battery holder.

8 AA alkaline batteries are required and need to be purchased separately.

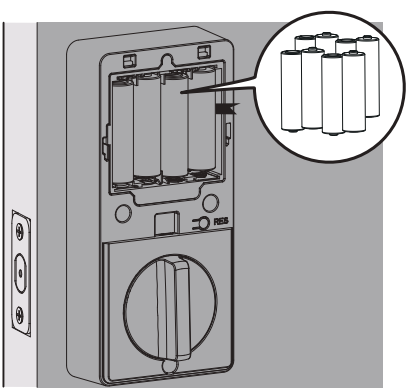

⑯ Keep the door open and unlocked. Press and hold the Reset Button for 5 seconds.

Keep holding the Reset Button until you hear a long beep and the latch bolt extends automatically.

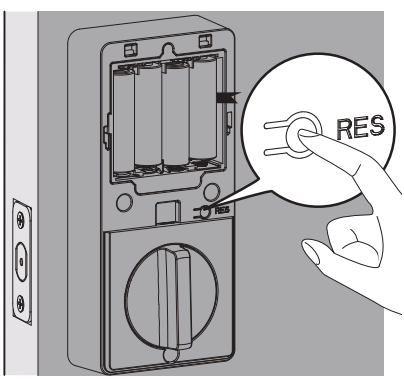

⚠ Attention

Ensure the cable is not pinched or the lock will not function properly.

Need help?

U.S.A. & Canada: **+1(833)599-9111**

Remove the Batteries

① Remove the 4 outer batteries from right to left.

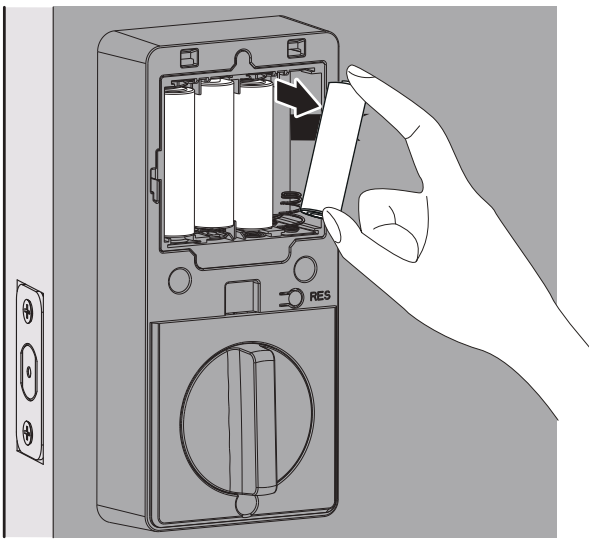

② Pull the ribbon to remove the 4 inner batteries from right to left.

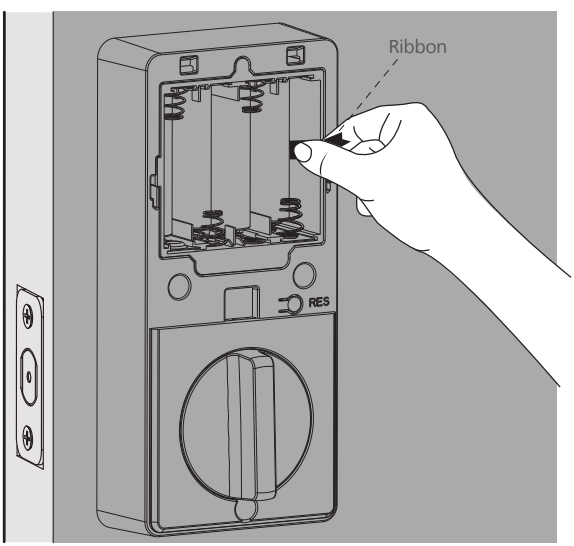

3 How to Setup

Download the Philips Home Access App

Home Access

Download on the App Store

GET IT ON Google Play

Scan the QR Code to download the Philips Home Access app.

Create a User Account

Register and log in to the Philips Home Access app.

Add the Device

Bring your phone close to the lock, enable Location and Bluetooth permissions, then scan the QR code on the back of the battery cover to add the device.

Attention

If the device is not found, please ensure that the app permissions for Location and Bluetooth are enabled for pairing.

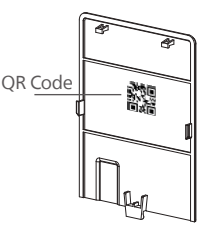

If the Wi-Fi connection fails, please follow these tips:

· Check if the Wi-Fi connection is stable.

· Ensure the network is 2.4GHz, as the lock only supports 2.4GHz. If your router is dual-band (2.4GHz/5GHz), turn off the 5GHz band.

· Keep the router and lock within 65ft (20m). Avoid walls and interference sources like microwaves.

· Too many devices connected to Wi-Fi may affect the lock's connection.

· Ensure the lock's firmware and app are up-to-date. If an update is available, please upgrade promptly.

4 How to Use

Feature Definitions

⚠ Attention

Feature settings can be adjusted if needed through the Philips Home Access app.

Master PIN Code

Required for programming and adjusting settings. The Master PIN Code can be used to unlock the deadbolt in Away Mode and Privacy Mode. The default Master PIN Code (12345678) must be changed immediately via the Philips Home Access app after completing the installation. The owner/manager should keep this information confidential.

4 Ways to Unlock

Unlock with your fingerprint, PIN codes, keys, or a simple touch via the Philips Home Access app. Fingerprints and PIN codes can be added through the app settings (fingerprint enrollment should be done on the lock).

Simple Sharing

Follow the in-app instructions in the Phillips Home Access app to share access with your family or friends. The access can only be shared and accepted via the Phillips Home Access app.

Lock Activities Record

Offers a detailed record of all lock interactions and activities like lock/unlock events and user access.

Multi-mode PIN codes

Create multi-mode PIN codes remotely via the Philips Home Access app for different needs like inviting guests or ordering a service technician.

One-Touch Locking

Lock the door by simply pressing and holding any key on the keypad for 2s.

Lock the door by simply pressing "✓" 1 time without entering any code.

Lock the door by Fingerprint when the device is unlocked.

Auto-Lock

The device will automatically lock after it has been unlocked. This feature is disabled by default. It can be set between 10 and 180 seconds via the Philips Home Access app.

Silent Mode

The sounds can be muted when pressing the keypad. However, you will still hear low battery warnings and system alerts. Enable it in the Philips Home Access app.

Away Mode

This is a safety feature when you leave your house for a vacation or long trip. Away Mode restricts all User PIN Codes and Fingerprints until the Master PIN Code is entered on the keypad. When the lock is unlocked by the Thumb Turn, it will sound an alarm for 1 minute and send a notification via the Philips Home Access app.

Enable it in the Philips Home Access app.

By entering the Master PIN Code on the keypad or setting it on the Philips Home Access app, you can disable the alarm and the Away Mode.

Factory Reset & Default Settings

This procedure erases all user and network settings and unpairs the lock from users' accounts.

All paired accessories will also be removed. Restoring the lock will also activate the lock-handing process.

Keep the door open and unlocked.

Press and hold the Reset Button for 5 seconds.

Keep holding the Reset Button until you hear a long beep and the latch bolt extends automatically.

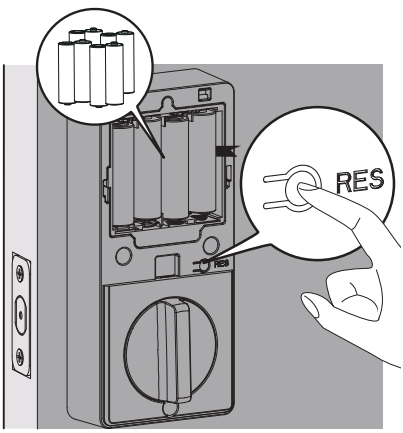

Function	Default Setting
Master PIN Code	12345678
Auto-Lock	Disabled
Silent Mode	Disabled
Shut Down Time	3 minutes
Away Mode	Disabled

Credential Type and Maximum Capacity

1. Master PIN Code (4 to 10 digits): The default Master PIN Code is 12345678. Change the default Master. PIN Code before programming other codes.
2. User PIN Code (4 to 10 digits): A total of 100 User PIN Codes can be programmed and stored in the lock.
3. User Fingerprint: 20 fingerprints can be programmed and stored in the lock.

Program the Lock

Attention

The default Master PIN Code is 12345678. Change the default Master PIN Code before programming the lock. The indicator light will flash red when the code entered is not saved successfully.

If no key is pressed for more than 10 seconds, the lock will exit programming mode.

All settings can be easily managed through the Philips Home Access app, with configuration recommended there.

Change the Default Master PIN Code

Press ✕ **2** times → **Enter Master PIN Code** (default is 12345678) → Press ✓ **1** time (**Green light is on**) → **Enter new Master PIN Code** →

Press ✓ **1** time → **Re-enter new Master PIN Code** → Press ✓ **1** time (**Green light is on**)

Change the Master PIN Code

Press ✕ **2** times → **Enter Master PIN Code** → Press ✓ **1** time (**Green light is on**) → Press **1** →

Enter new Master PIN Code → Press ✓ **1** time → **Re-enter new Master PIN Code** → Press ✓ **1** time (**Green light is on**)

Add a User PIN Code

Press ✕ **2** times → **Enter Master PIN Code** → Press ✓ **1** time (**Green light is on**) → Press **2** →

Enter new User PIN Code → Press ✓ **1** time → **Re-enter new User PIN Code** → Press ✓ **1** time (**Green light is on**)

Delete the User PIN Code

Press ✕ **2** times → **Enter Master PIN Code** → Press ✓ **1** time (**Green light is on**) → Press **3** →

Enter the unwanted User PIN Code → Press ✓ **1** time (**Green light is on**)

Add a User Fingerprint

Press ✕ **2** times → **Enter Master PIN Code** → Press ✓ **1** time (**Green light is on**) → Press **4** →

Scan fingerprint 8 times
Each successful scan along with a green light
Green light is on

⚠ **Attention**

To improve recognition, register your finger from different angles during the 8-time scanning.

Delete the User Fingerprint

Press ✕ **2** times → **Enter Master PIN Code** → Press ✓ **1** time (**Green light is on**) → Press **5** →

Scan the unwanted fingerprint **1** time
Green light is on

Timed Auto-Lock Setting

Press ✕ **2** times → **Enter Master PIN Code** → Press ✓ **1** time (**Green light is on**) → Press **7** →

Press **1** → Press ✓ **1** time	**Auto-Lock OFF**	**Green light is on**
OR		
Press **2** → Press ✓ **1** time	**for 30s**	**Green light is on**
OR		
Press **3** → Press ✓ **1** time	**for 60s**	**Green light is on**
OR		
Press **4** → Press ✓ **1** time	**for 120s**	**Green light is on**
OR		
Press **5** → Press ✓ **1** time	**for 180s**	**Green light is on**

Away Mode

Press ✕ **2** times → **Enter Master PIN Code** → Press ✓ **1** time (**Green light is on**) → Press **8** →

Press ✓ **1** time (**Green light is on**)

Lock & Unlock

Unlocking the Door from Outside

1. Unlock by PIN codes.
2. Unlock by Fingerprint.
3. Unlock by Mechanical Key.
4. Unlock by the Philips Home Access app.

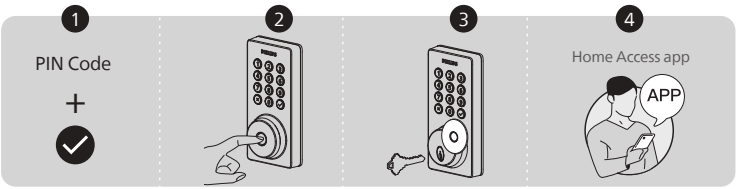

Unlocking the Door from Inside

1. Rotate the Thumb Turn to the unlocked position.
2. Unlock by the Philips Home Access app.
3. Unlock by the Voice Assistant.

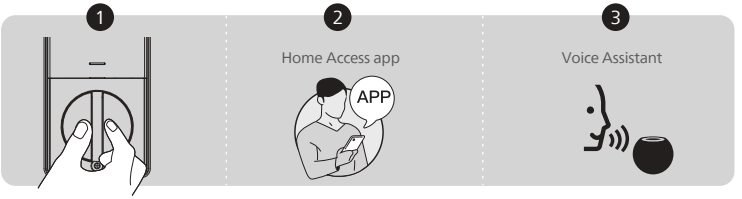

Locking the Door from Outside

1. Press and hold any button on the keypad for at least 2 seconds to lock the door in Manual Mode Or lock by pressing " ✓ " 1 time without entering any code.
2. In Auto-Lock mode, the device is locked automatically.
3. Lock by the Philips Home Access app.
4. Lock by Mechanical Key.
5. Lock by Fingerprint.

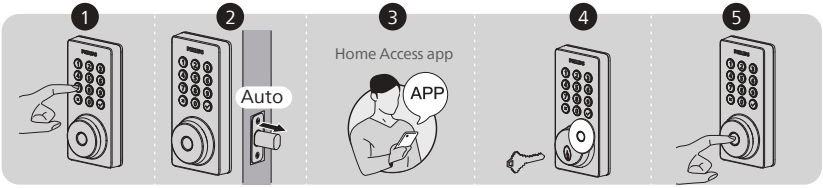

Locking the Door from Inside

1. Rotate the Thumb Turn to the locked position to lock the device in Manual Mode.
2. In Auto-Lock Mode, the device is locked automatically.
3. Lock by the Philips Home Access app.
4. Lock by the Voice Assistant.

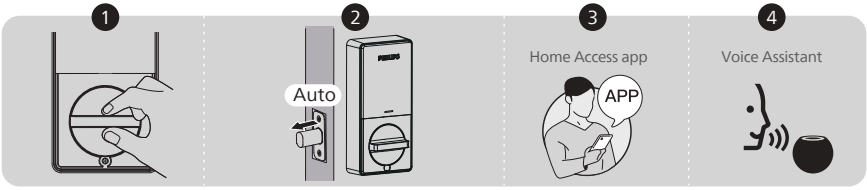

5 Troubleshooting

Issue	Solution
The Latch Bolt does not operate correctly after installation.	◆ Make sure the backset on the Latch Bolt is set to the proper length. Refer to page 8. ◆ Make sure before installation the Latch Bolt is retracted. Refer to page 9. ◆ Restore to the factory default setting and enter the default Master PIN Code to set up the lock. Refer to page 15.
After installation, the Latch Bolt makes sounds but does not work.	**Ensure you have followed the installation instructions. Re-install and reset the lock by paying attention to the following tips:** ◆ Before installing the Exterior and Interior Assembly, make sure the Latch Bolt is fully retracted (in the unlocked position). ◆ Do not insert the key when you are installing. ◆ Ensure you have inserted the cable connector of the Exterior Assembly to the socket on the Interior Assembly correctly. ◆ Keep the Exterior and Interior Assembly aligned and parallel to the door edge, and the Latch Bolt parallel to the door edge. ◆ Press and hold the Reset Button for at least 5 seconds until you hear a beep. ◆ Use 8 new AA dry batteries, do not use rechargeable batteries, or new batteries mixed with old batteries.
The door handing is not activated after the batteries are installed.	◆ Press the Reset Button for at least 5 seconds until you hear the tone prompting you to restore the default settings.
The lock turns in the wrong direction.	◆ Press and hold the Reset Button for at least 5 seconds until you hear a beep to activate the lock-handing process. ◆ If resetting fails to solve it, the lock is probably not installed correctly. Please re-install the lock and reset it again.
Cannot pull out the key from the Keyhole.	◆ Disassemble the lock, then rotate to pull out the key and re-install the lock. ◆ Do not insert the key when you are installing.
The lock rotates only if the Key is inserted.	◆ Make sure the Latch Bolt is installed correctly. Refer to page 8-9.
The lock does not smoothly lock or unlock while using the Thumb Turn.	◆ Confirm the Mounting Screws are properly installed.

Issue	Solution
The lock only locks but does not unlock, or the Latch Bolt goes in and out uncontrollably.	◆ If the door locks and unlocks smoothly in the open position, then there is a problem with the door frame. Make sure the hole in the door frame is drilled a minimum of 1"(25mm) deep to leave enough space for the deadbolt to extend into the door frame when the door is locked. ◆ If the issue still happens in the open position, then there is a problem with the lock handing or installation. Press and hold the Reset Button for at least 5 seconds until you hear a beep to reset the lock. If resetting fails to solve it, the lock is probably not installed correctly. Please re-install the lock and reset it again. ◆ If the solutions still cannot solve the problem, contact us.
Failed to lock.	◆ Keep the Exterior and Interior Assembly aligned and parallel to the door edge. ◆ Keep the Latch Bolt parallel to the door edge.
The Master PIN Code cannot be changed.	◆ Change the Master PIN Code via the Philips Home Access app. ◆ Restore factory settings and reprogram all user PIN codes. Refer to page 15.
Failed to scan the QR Code on the device.	◆ Scan the QR Code in a well-lit environment, use the built-in flashlight on your phone, or try to scan in an environment with sufficient lighting. ◆ Ensure enough distance between your smartphone and the QR Code, and ensure the QR Code is at the center of your phone screen. ◆ Direct lighting or sunlight can cause reflections that will interfere with the scanning process.
Failed to add the device via Bluetooth.	◆ Make sure your smart lock has enough power, and your phone is close to it. ◆ Check your phone's Bluetooth settings and ensure it's turned on. ◆ If you have an Android device, enable the Location Service.
Failed to set up the lock.	◆ Make sure the lock is installed correctly. ◆ Insert fresh batteries and make sure that the cable is not pinched. ◆ After installation, reset the lock to factory settings to complete the lock setting process.
I forgot my Master PIN Code.	◆ Change the Master PIN Code via the Philips Home Access app. ◆ Perform a factory reset to clear all PIN codes. Once the reset is completed, all PIN codes will be deleted and the Master PIN Code will be reset to the default Master PIN Code of 12345678.

Still have questions or need help? Please feel free to contact us:

U.S.A. & Canada: **+1(833)599-9111**

Issue	Solution
Cannot add fingerprints, or the fingerprint does not work.	◆ Make sure the fingerprint is registered and recognizable. ◆ Change the default Master PIN Code (12345678) before adding fingerprints. ◆ Keep the finger to be registered dry and clean. ◆ Keep the Fingerprint Sensor dry and clean. ◆ Add multiple fingerprints with the same finger. ◆ Try to add fingerprints of other fingers. ◆ To improve recognition, register your finger from different angles and press harder during the 8-time scanning.
Receiving low battery alerts.	◆ Remove the batteries and insert 8 new AA alkaline batteries.
The keypad is not responding.	◆ Make sure batteries are inserted correctly. ◆ If the battery indicator flashes continuously, the batteries are low. Please replace them with 8 new AA alkaline batteries. ◆ Make sure that the cable is properly connected and has not been damaged during installation.
Auto-Lock is not working.	◆ If the battery indicator flashes continuously, the batteries are low. Please replace them with 8 new AA alkaline batteries. ◆ Activate the Auto-Lock function. Enable it in the Philips Home Access app.
The Philips Home Access app displays that the door is open when the door is closed.	◆ Re-calibrate your lock with the door position sensor in the Philips Home Access app. ◆ If re-calibration does not solve this problem, check to see if another magnet has been brought into the range of the lock. If so, remove it.

6 Warranty

2 Years Warranty

This limited warranty applies to Philips Home Access products. It covers defects in materials and workmanship under normal use and conditions, as determined by Conex or its authorized dealer.

For more information on the warranty applicable to this product, please visit http://www.usa.philips.com, or contact the reseller from whom you purchased the product.

7 FCC Statement

This equipment has been tested and found to comply with the limits for a Class B digital device, pursuant to part 15 of the FCC Rules. These limits are designed to provide reasonable protection against harmful interference in a residential installation. This equipment generates, uses and can radiate radio frequency energy and, if not installed and used in accordance with the instructions, may cause harmful interference to radio communications. However, there is no guarantee that interference will not occur in a particular installation. If this equipment does cause harmful interference to radio or television reception, which can be determined by turning the equipment off and on, the user is encouraged to try to correct the interference by one or more of the following measures:

• Reorient or relocate the receiving antenna.

• Increase the separation between the equipment and receiver.

• Connect the equipment into an outlet on a circuit different from that to which the receiver is connected.

• Consult the dealer or an experienced radio/TV technician for help.

Caution: Any changes or modifications to this device not explicitly approved by manufacturer could void your authority to operate this equipment.

This device complies with part 15 of the FCC Rules. Operation is subject to the following two conditions: (1) This device may not cause harmful interference, and (2) this device must accept any interference received, including interference that may cause undesired operation.

RF Exposure Information

This equipment complies with FCC radiation exposure limits set forth for an uncontrolled environment. This equipment should be installed and operated with minimum distance 20cm between the radiator and your body.

8 ISED Canada Statement:

This device contains licence-exempt transmitter(s)/receiver(s) that comply with Innovation, Science and Economic Development Canada's licence-exempt RSS(s). Operation is subject to the following two conditions:

(1) This device may not cause interference.

(2) This device must accept any interference, including interference that may cause undesired operation of the device.

Radiation Exposure: This equipment complies with Canada radiation exposure limits set forth for an uncontrolled environment.

IC Radiation Exposure Statement
The antennas used for this transmitter must be installed to provide a separation distance of at least 20 cm from all persons and must not be co-located for operating in conjunction with any other antenna or transmitter.

Cet appareil contient des émetteurs/
récepteurs exemptés de licence qui sont conformes aux RSS exemptés de licence d'innovation, sciences et développement économi que Canada. Le fonctionnement est soumis aux deux conditions suivantes:
(1) ce dispositif ne peut pas causer d'interférence.
(2) ce dispositif doit accepter toute interférence, y compris l'interférence qui peut causer un fonctionnement indésirable du disposit if.

Exposition au rayonnement: cet équipement est conforme aux limites canadiennes d'exposition au rayonnement établies pour un e nvironnement non contrôlé.
Déclaration d'exposition aux radiations IC
Les antennes utilisées pour cet émetteur doivent être installées de manière à assurer une distance de séparation d'au moins 20 cm a u moins de toute personne et ne doivent pas être co-localisés pour fonctionner en conjonction avec autre antenne ou émetteur.

Contenu FR

Introduction 27

1 Avertissements & Sécurité 27

Sécurité
Avertissements
Retours & Recyclage

2 Installation 28

Liste des Pièces
Aperçu de l'Assemblage
Installation de la Serrure
Retirez Les Piles

3 Configuration 38

Téléchargement de l'Application Philips Home Access
Créer un Compte Utilisateur
Ajouter l'Appareil

4 Utilisation 39

Définitions des Fonctionnalités
Réinitialisation & Paramètres par Défaut
Type d'Identification et Capacité Maximale
Configuration de la Serrure
Verrouillage & Déverrouillage

5 Dépannage 47

6 Garantie 49

7 Déclaration ISED 50

Introduction

Félicitations pour votre achat et bienvenue dans la famille Philips Smart Security !

Pour bénéficier pleinement de l'assistance offerte par Philips Home Access, enregistrez votre produit sur **www.philips.com/myphilips**

Enregistrez votre produit

- Gardez la trace de la couverture de la garantie de votre produit
- Bénéficiez de remises en argent, de cadeaux et d'offres spéciales
- Bénéficiez d'un accès facile au support produit

1 Avertissements & Sécurité

Sécurité

- Avant d'utiliser ce produit, veuillez lire et comprendre toutes les instructions. Toute perte entraînée par le non-respect des instructions ne sont pas couvertes par la garantie.
- Utilisez uniquement les composants fournis par le fabricant et les accessoires recommandés.
- Utilisez uniquement des piles alcalines AA.
- Ne pas forcer sur le produit lors du démontage car cela pourrait déclencher une alerte ou l'endommager.
- Ne pas gratter le Détecteur d'empreintes digitales avec des objets pointus car cela pourrait causer des dommages permanents.
- Ne pas retirer les piles pendant la configuration et lors de l'utilisation de la serrure.
- Modifiez immédiatement le Code PIN Principal par défaut via l'application Philips Home Access après avoir terminé l'installation.

Avertissements

- Ne pas laisser les piles proches d'une source de feu.
- Ne pas connecter les 2 pôles des piles à des métaux pour éviter un court-circuit et une explosion potentielle.
- Tout remplacement d'accessoire doit être effectué par Philips, un centre de service agréé par Philips ou un technicien professionnel.
- Ne pas utiliser des pièces ou des accessoires fabriqués par un tiers, sauf les piles.
- Ne pas exposer les produits à des endroits avec des fuites ou des éclaboussures d'eau.

Retours & Recyclage

- Les serrures peuvent être retournées dans un centre de service agréé Philips. Une compensation appropriée sera fournie si le produit retourné répond aux conditions de Philips.
- Veuillez respecter les réglementations locales et ne jetez pas les produits ou piles usagés dans les ordures ménagères normales.

2 Installation

Listes des Pièces

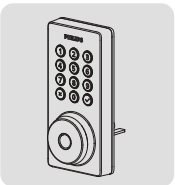

① Assemblage Externe

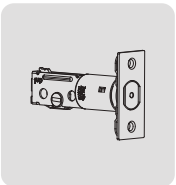

② Pêne Demi-Tour

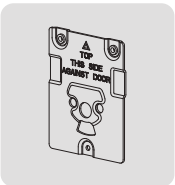

③ Plaque de Montage

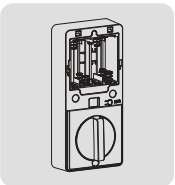

④ Assemblage Interne

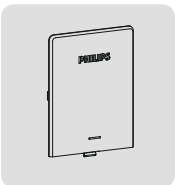

⑤ Cache de Batterie

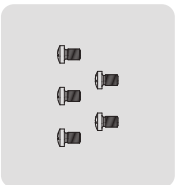

⑥ Vis de l'Assemblage Interne (5)(2 de rechange)

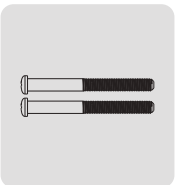

⑦ Vis de la Plaque de Montage (2)

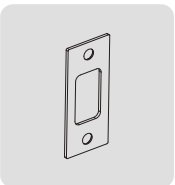

⑧ Plaque de la Gâche

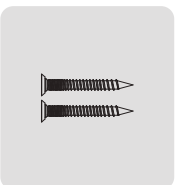

⑨ Vis de la Gâche (2)

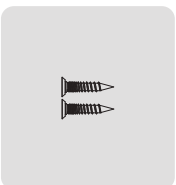

⑩ Vis de Pêne Demi-Tour (2)

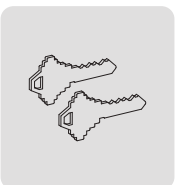

⑪ Clés mécaniques

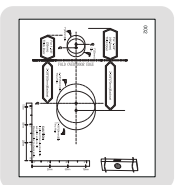

⑫ Gabarit de Perçage

⑬ Mode d'Emploi

⑭ Guide de Démarrage Rapide

*8 piles alcalines AA sont requises et doivent être achetées séparément.

Aperçu de l'Assemblage

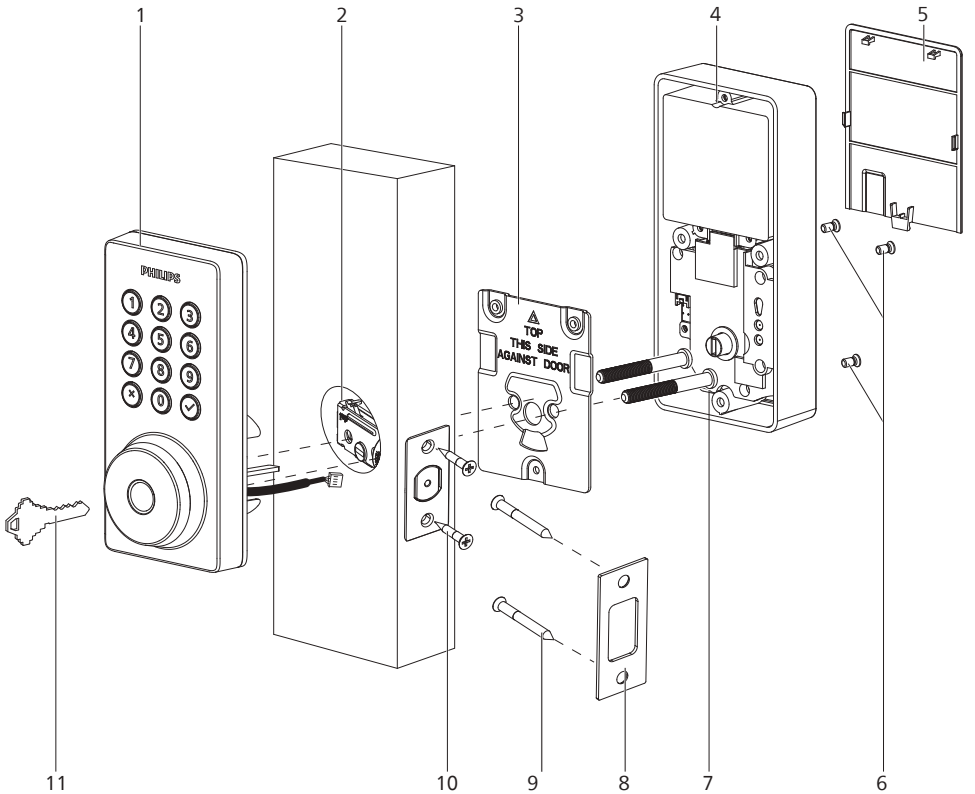

1. Assemblage Externe
2. Pêne Demi-Tour
3. Plaque de Montage
4. Assemblage Interne
5. Cache de Batterie
6. Vis de l'Assemblage Interne (3)
7. Vis de la Plaque de Montage (2)
8. Plaque de la Gâche
9. Vis de la Gâche (2)
10. Vis du Pêne Demi-Tour (2)
11. Clés mécaniques (2)

Assemblage Externe

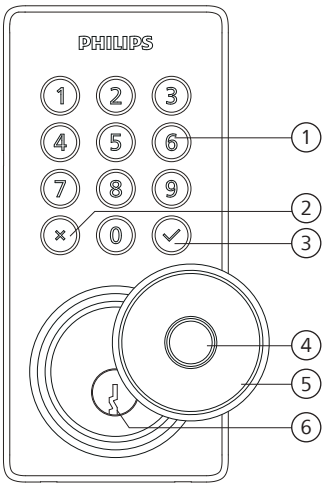

1	Clavier Tactile
2	Bouton d'Annulation
3	Touche de confirmation avec indicateur de rétroéclairage
4	Détecteur d'Empreintes Digitales
5	Cache de la Serrure
6	Trou de la Serrure

Assemblage Interne

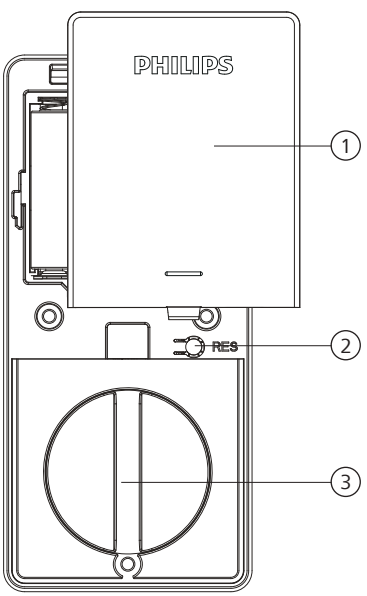

1	Cache de Batterie
2	Bouton de Réinitialisation
3	Bouton de Verrouillage

Installation de la Serrure

Outils Requis

#2 Tournevis Cruciforme

8 piles alcalines AA (achetées séparément)

Préparez la Porte et Vérifiez les Dimensions

① Mesurez pour vérifier que le trou dans la porte soit 1-1/2 ou 1-1/8 pouces (38 mm ou 54 mm).

Mesurez pour vérifier que le trou sur les côtés de la porte soit de 1 pouce (25 mm).

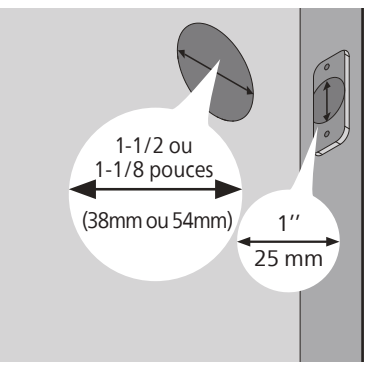

② Mesurez pour confirmer que l'entraxe soit de 2-3/8 ou 2-3/4 pouces (60 mm ou 70 mm).

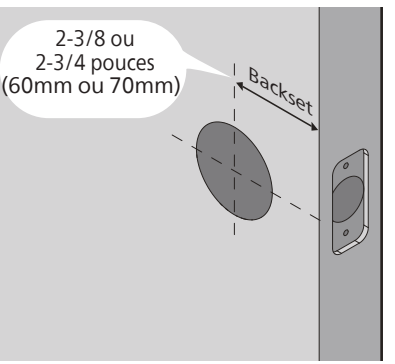

③ Mesurez pour confirmer que la porte soit d'une épaisseur de 1-3/8 à 2 pouces (35 mm à 50 mm).

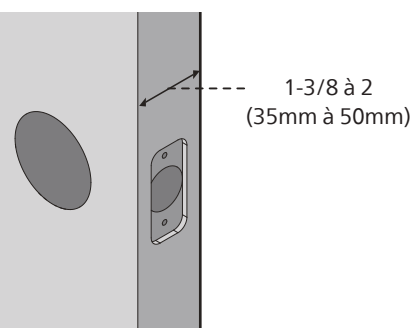

④ Assurez-vous que le trou dans le cadre de la porte soit au moins de 1 pouce (25 mm) de profondeur pour laisser suffisamment d'espace au verrou de s'étendre dans le cadre de la porte lorsque la porte est verrouillée.

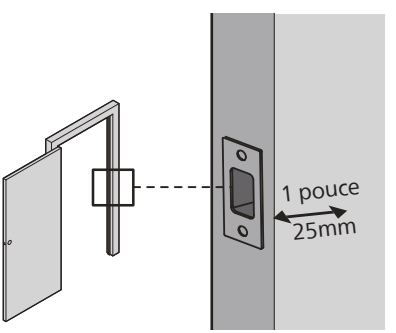

⚠ Attention

Assurez-vous que le cadre de la porte soit aligné avec la porte et qu'il n'y ait aucun blocage dans le cadre de la porte.

⑥ Déterminez l'entraxe et ajustez le Pêne Demi-Tour.

Tenez le Pêne Demi-Tour devant le trou de la porte, avec la face du Pêne Demi-Tour alignée contre le côté de la porte. L'entaille d'encastrement est-elle centrée au trou de la porte ?

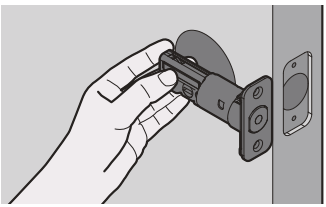

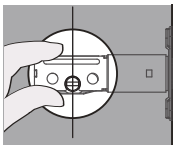

OUI

Aucun ajustement n'est nécessaire.

Passez à l'étape suivante.

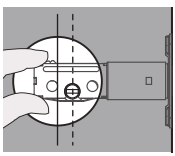

NON

L'entaille d'encastrement n'est PAS centrée.

Tournez et tirez le Pêne Demi-Tour comme indiqué pour l'étendre.

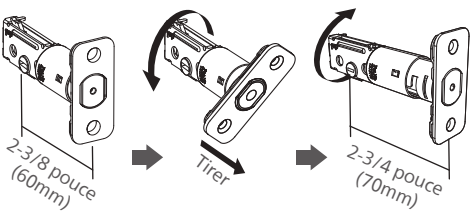

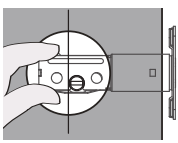

NON

Pour le trou de perçage de 1-1/2 pouce (38 mm), utilisez un trépan de perçage de 1 pouce (25 mm) pour agrandir l'entaille d'encastrement d'une profondeur d'au moins 13/64 pouces (5 mm).

Pas besoin d'agrandir l'entaille d'encastrement pour un trou de perçage de 2-1/8 pouces (54 mm).

Après avoir agrandi l'entaille d'encastrement, insérez le Pêne Demi-Tour de nouveau pour vous assurer qu'il est bien adapté.

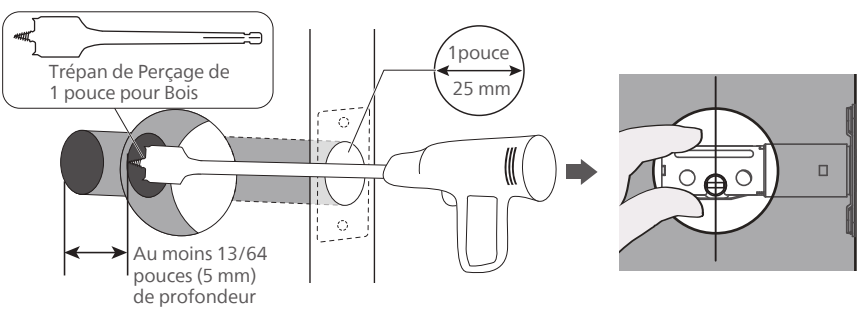

---

⑦ Installez le Pêne Demi-Tour.

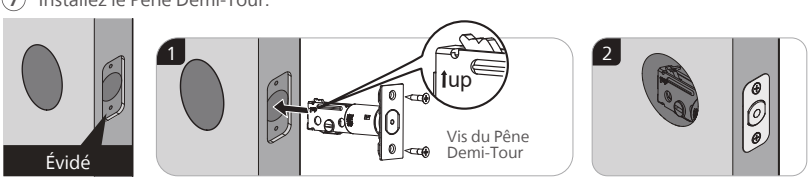

⑦ Installez le Pêne Demi-Tour et faites-le tourner avec un tournevis pour s'assurer d'une rotation sans difficulté.

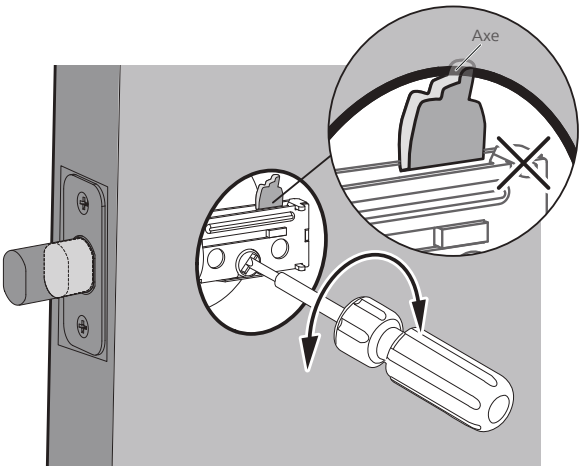

S'il ne peut pas tourner avec aisance, c'est parce que le trou de la porte est trop petit.

Retirez le Pêne Demi-Tour et ciselez un petit canal en haut du trou pour que l'axe dans le trou du Pêne Demi-Tour puisse tourner.

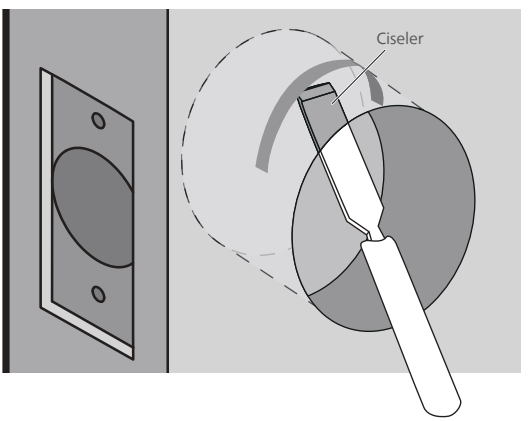

⑧ Installez la Plaque de Gâche sur le cadre de la porte.

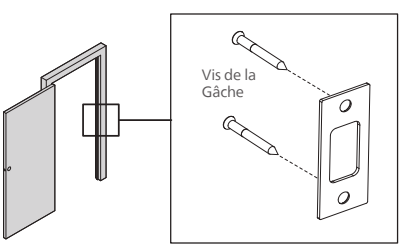

⚠ Attention

Assurez-vous que le trou dans le cadre de la porte soit d'une profondeur minimale de 1 pouce (25 mm).

Installation de l'Assemblage Externe

⚠ Attention

Avant l'installation de l'Assemblage Interne et Externe, assurez-vous que le Pêne Demi-Tour soit complètement rétracté (en position déverrouillée).

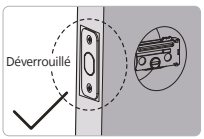

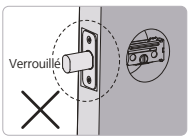

Ne pas insérer la clé lorsque vous l'installer.

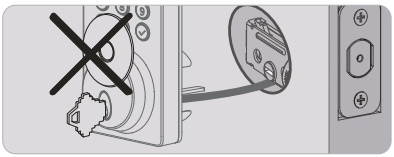

Mesurez le diamètre du trou dans la porte.

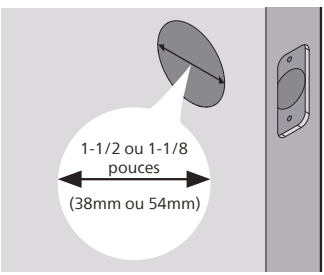

1-1/2 pouce(38mm)

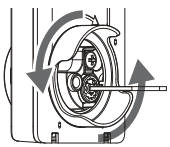

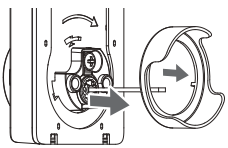

Retirez l'entretoise

2-1/8 pouces(54mm)

Passez à l'étape suivante.

---

⑨ Avec le Pêne Demi-Tour entièrement rétracté (en position déverrouillée), acheminez le câble sous le Pêne Demi-Tour et insérez l'embout dans le trou de l'Assemblage Externe.

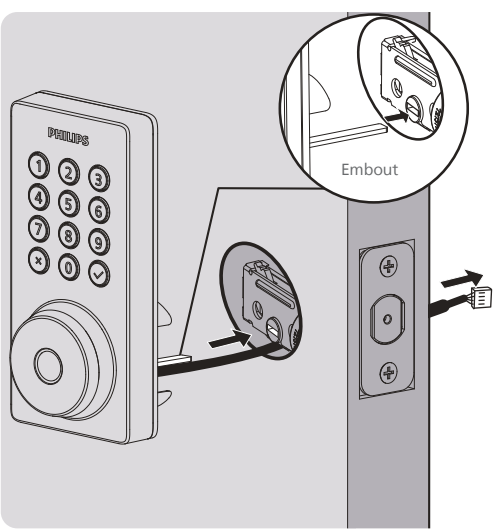

⑩ Fixez la Plaque de Montage avec les Vis de la Plaque de Montage. Ne serrez pas trop les vis.

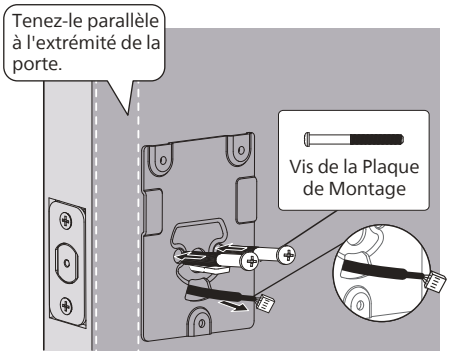

⚠ Attention

Acheminez le câble à travers le trou de la Plaque de Montage.

Installation de l'Assemblage Interne

⑪ Poussez la Cache de Batterie vers le haut dans la direction illustrée.

⚠ Attention

Ne pas insérer les piles avant de terminer l'installation de la serrure.

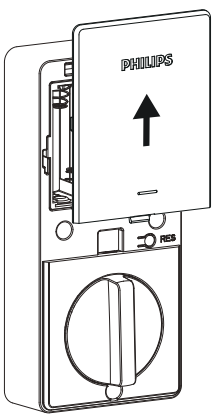

⑫ Insérez le connecteur du câble de l'Assemblage Externe dans la douille de l'Assemblage Interne. Poussez fermement le connecteur vers l'intérieur jusqu'à ce qu'il soit complètement fixé.

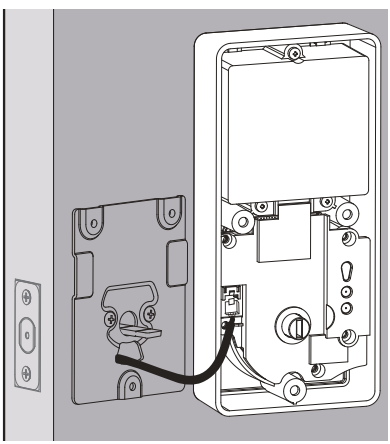

⑬ Gardez le Bouton de Verrouillage en position verticale et l'embout en position horizontale, puis installez l'Assemblage Interne.

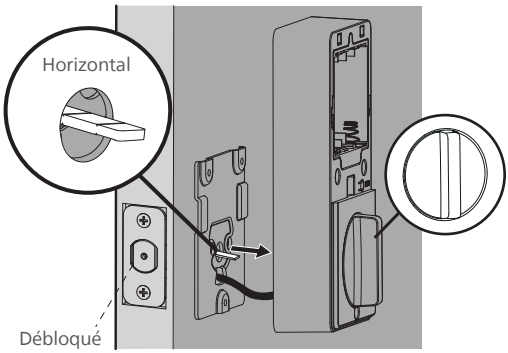

⑭ Fixez l'assemblage interne à la plaque de montage et fixez-le à l'aide de 3 vis de montage intérieur.

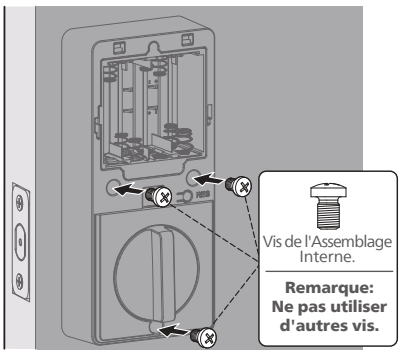

⑮ Installez les piles alcalines AA en suivant l'orientation indiquée à l'intérieur du compartiment de batterie.

8 piles alcalines AA sont requises et doivent être achetées séparément.

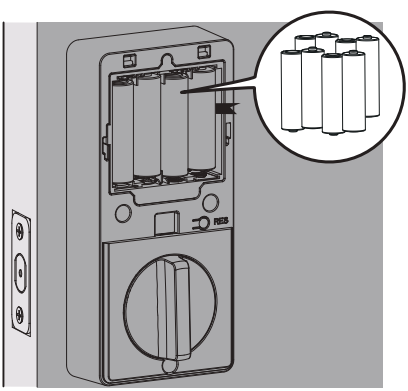

⑯ Gardez la porte ouverte et déverrouillée.

Appuyez sur le Bouton de Réinitialisation et maintenez-le enfoncé pendant 5 secondes.

Maintenez le Bouton de Réinitialisation enfoncé jusqu'à ce que vous entendiez un long bip et que le pêne demi-tour se déploie automatiquement.

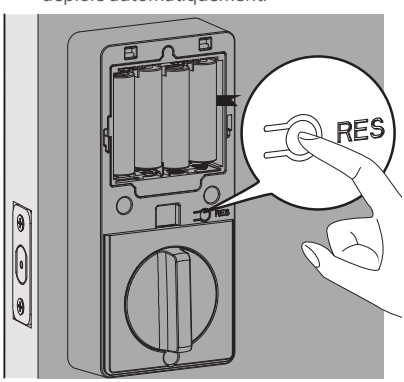

⚠ Attention

Assurez-vous que le câble n'est pas coincésinon le verrou ne fonctionnera pascorrectement.

Besoin d'aide?

U.S.A. & Canada: **+1(833)599-9111**

Retirez Les Piles

① Retirez les 4 piles extérieures de droite à gauche.

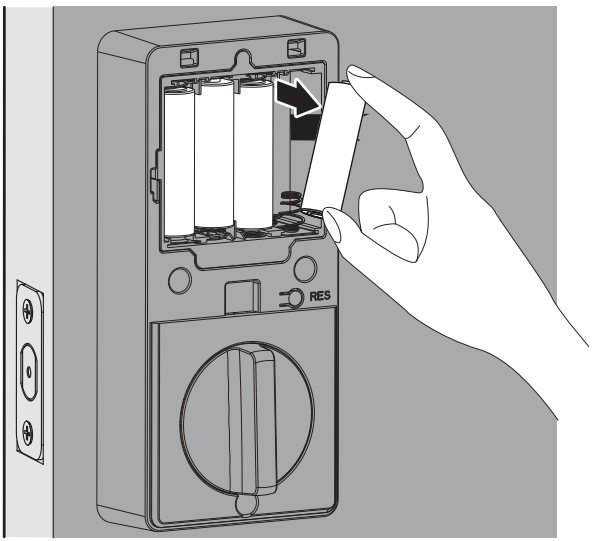

② Tirez sur la languette pour retirer les 4 piles intérieures de droite à gauche.

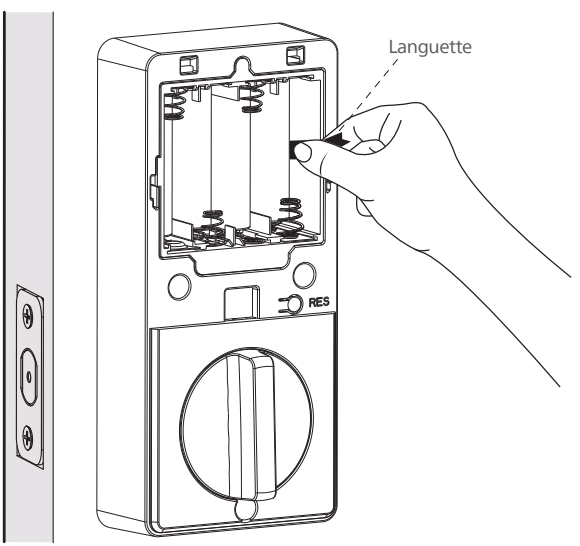

3 Configuration

Téléchargement de l'Application Philips Home Access

Home Access

Télécharger dans l'App Store

L'OBTENIR SUR Google Play

Scannez le code QR pour télécharger l'application Philips Home Access.

Créer un Compte Utilisateur

Enregistrez-vous et connectez-vous à l'application Philips Home Access.

Ajouter l'Appareil

Approchez votre téléphone proche de la serrure, activez les autorisations de Localisation et Bluetooth, puis scannez le code QR à l'arrière du cache de batterie pour ajouter l'appareil.

Attention

Si l'appareil n'est pas trouvé, assurez-vous que les autorisations de Localisation et Bluetooth données aux applications sont activées pour l'appairage.

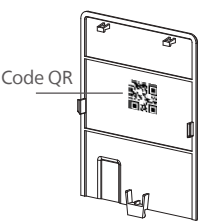

Si la connexion Wi-Fi échoue, veuillez suivre ces conseils :

· Vérifiez si la connexion Wi-Fi est stable.

· Assurez-vous que le réseau est un réseau de 2,4 GHz, car la serrure ne prend en charge que 2,4 GHz. Si votre routeur est bi-bande (2,4 GHz/5 GHz), désactivez la bande 5 GHz.

· Gardez le routeur et la serrure à moins de 65 pieds (20 m). Évitez les murs et les sources d'interférence comme les micro-ondes.

· Un trop grand nombre d'appareils connectés au Wi-Fi peut affecter la connexion de la serrure.

· Assurez-vous que le micrologiciel et l'application de la serrure sont à jour. Si une mise à jour est disponible, veuillez la mettre à jour rapidement.