L3S Wall mounted DC Charger

Installation Guide

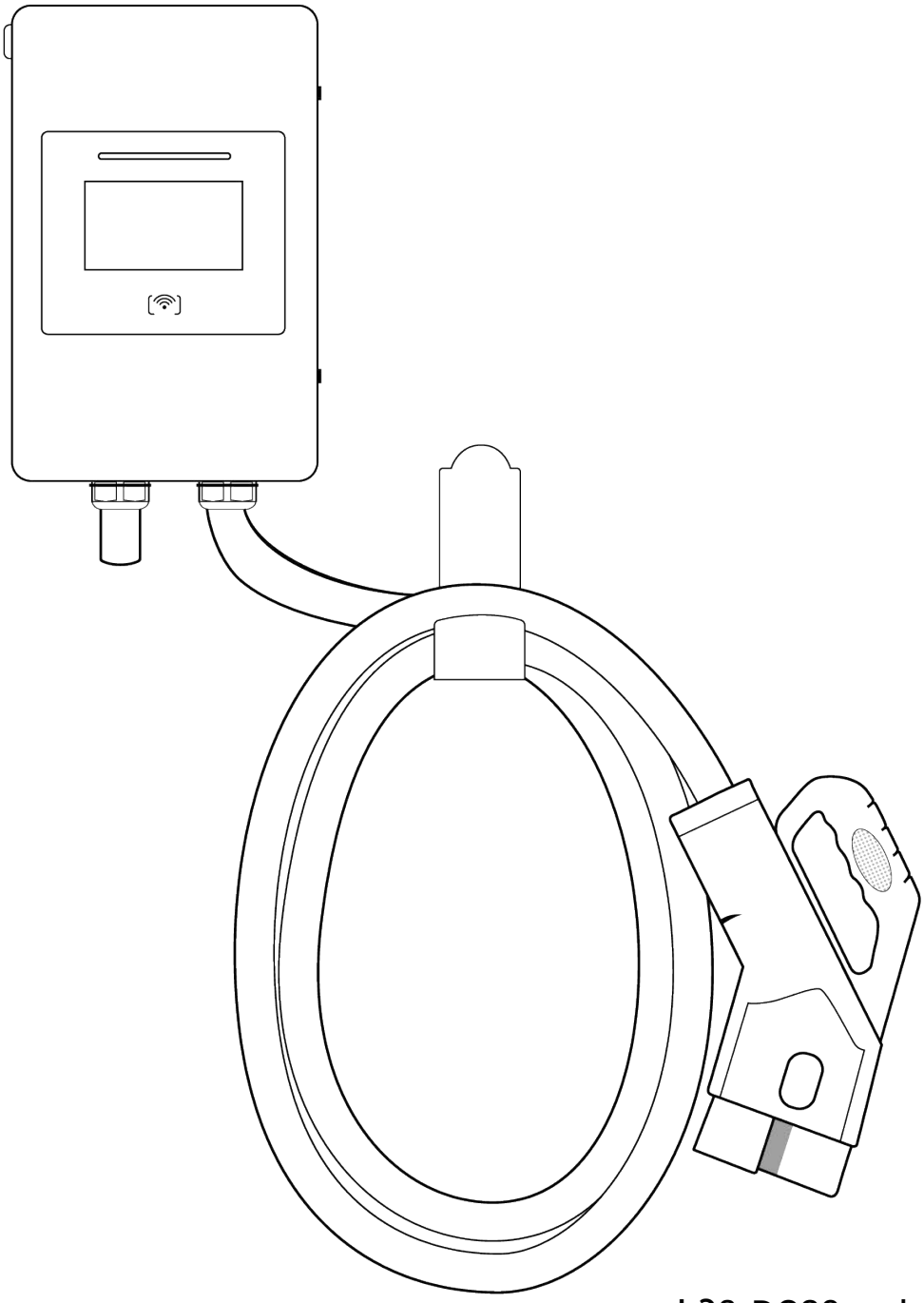

L3S-DC20xyzk
L3S-DC30xyzk
L3S-DC40xyzk

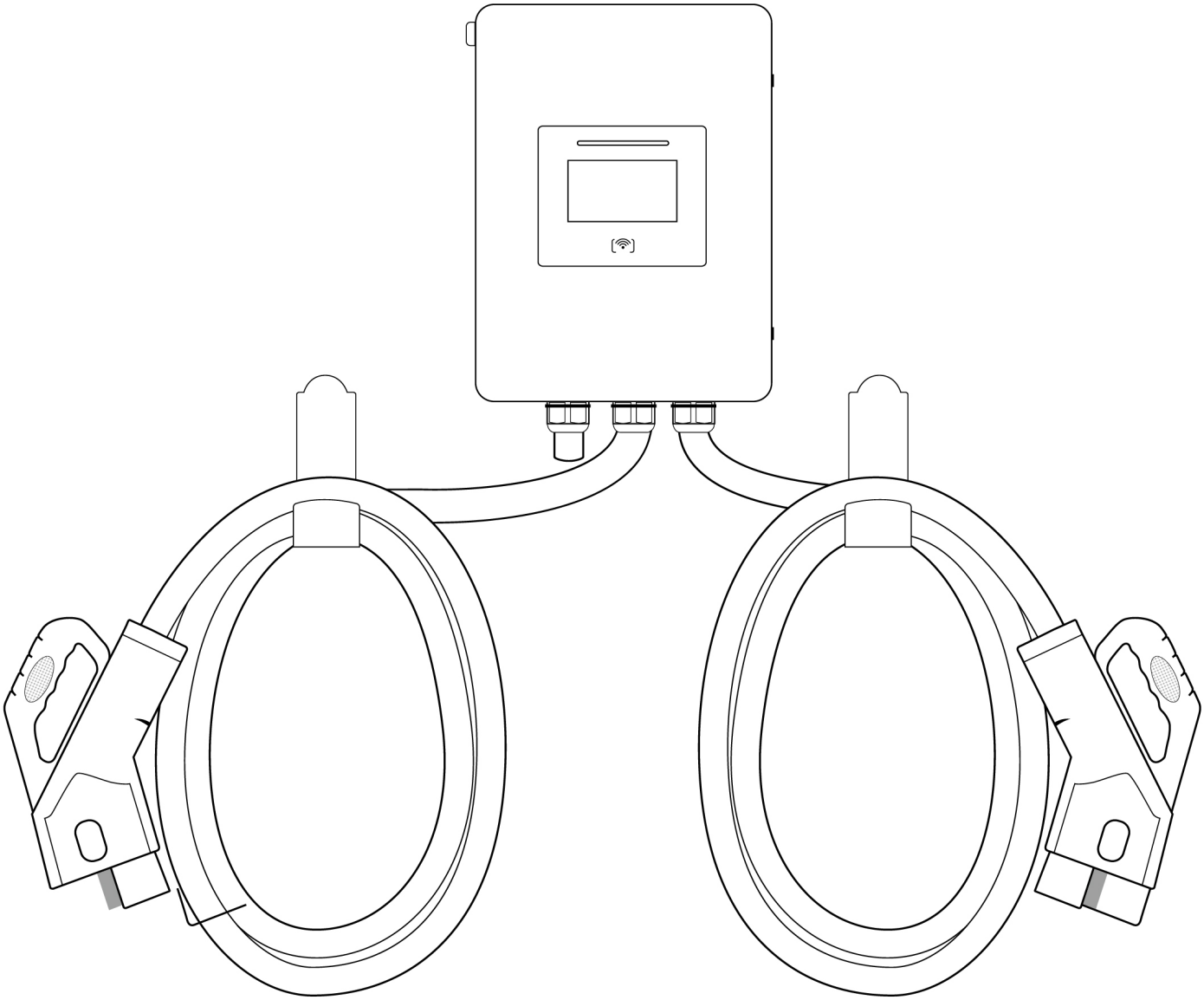

L3D-DC30xyzki
L3D-DC40xyzki
L3D-DC60xyzki

CONTENT

Applications **1**

1. Basic User Interface **2**

2. Specification 4

2.1 Product Specification 4

3. Installation Instruction **7**

Before Installation 7

3.1 Grounding and Safety Requirement 8

3.2 Service Wiring 9

3.3 Unpack the charger 10

3.5 Accessory 12

3.9 Installation Inspection & Debuging 18

4. Operation Process **20**

4.1 Network Setting 20

4.2 Troubleshooting 23

5. Maintenance **25**

5.1 General Maintenance 25

5.2 Limited Product Warranty 27

Introductions

The L3 DC Fast Charger is the top choice to power battery electric vehicles (BEV) and plug-in electric vehicles (PHEV). It is designed for quick charging in both public and private locations, such as retail and commercial parking spaces, fleet charging stations, highway service areas, workplace, residence, etc.

The L3 Fast Charger has the advantage of easy installation. The wall-mounted design and plug-in power modules realize flexible and cost-effective installation for different types of locations. The DC Charger also has network communication capability. It is able to connect with remote network systems and provide drivers of electric cars real-time information, such as the location of charging stations, charging progress and billing information. The Wall Mount DC Fast Charger has a clear user interface with function buttons, safety certifications and an excellent waterproof and dust proof design to provide the best choice for outdoor environments.

Features

- Wall-Mounted design and plug-in power modules make installation easy and flexible.
- Offers customers the convenience of start/stop charging control from an authorized RFID smart card or mobile APP.
- Built on latest industry standards for DC charging.
- Carries an outdoor rating capable of withstanding solid and liquid intrusions in outdoor settings making the unit more stable and highly reliable.
- Provides a high-contrast, screen interface with multi-function buttons.

Applications

- Public and private parking areas
- Community parking areas
- Parking areas of hotels, supermarkets and shopping malls
- Workplace parking areas
- Charging stations
- Highway rest area

1. Basic User Interface

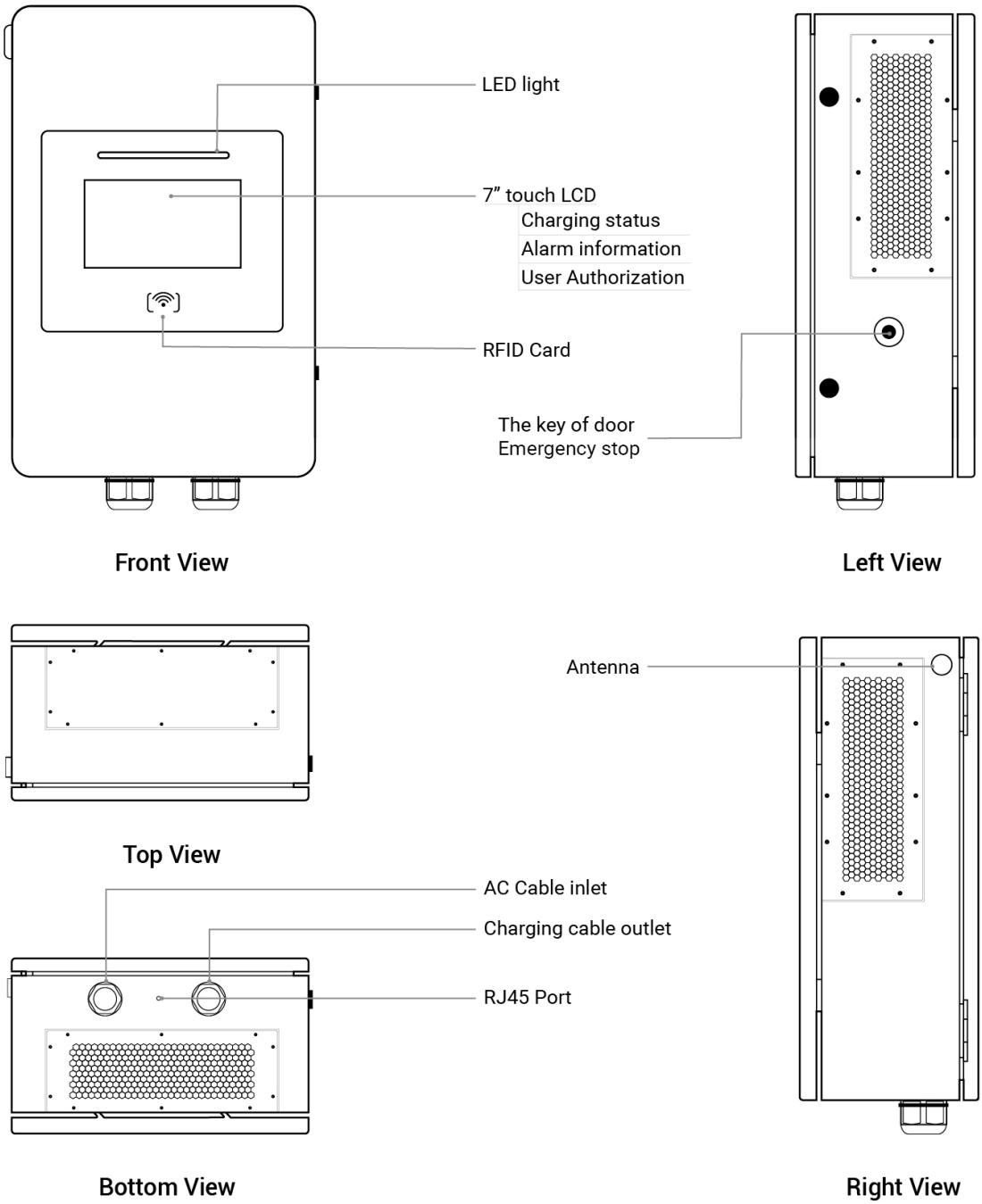

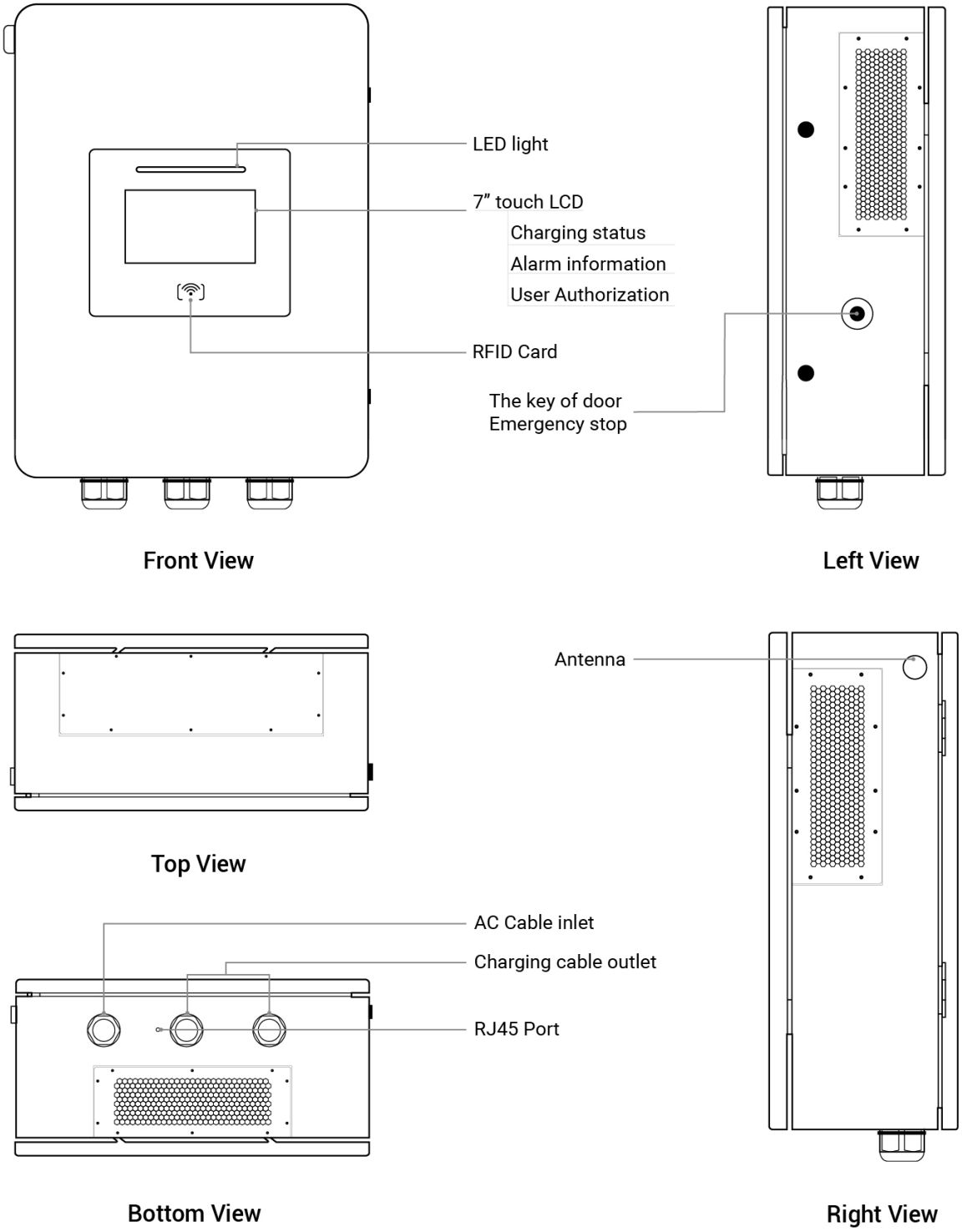
LED light
7" touch LCD
Charging status
Alarm information
User Authorization
RFID Card
The key of door
Emergency stop
Front View
Left View
Antenna
Top View
AC Cable inlet
Charging cable outlet
RJ45 Port
Bottom View
Right View

2.Specification

2.1ProductSpecification

Model	L3S-DC20kW	L3S-DC30kW	L3S-DC40kW
Technical features			
Power Input	Up to 20KW	Up to 30KW	Up to 40KW
Input/Output power	3P 280VAC/480VAC ±10% 3phase 45-65Hz		480VAC ±10% 3phase 45-65Hz
	0.98		
Efficiency	>95%		
Measuring accuracy	Level 0.5		
Output voltage range	CCS: 200~1000VDC		
Output current range	0-67A	0-100A	0-125A
Communication	Ethernet / WIFI / 4G / OCPP 1.6 J (TLS)		
User interface	RFID Card and App.		
Display	LCD 7 inch Touch Screen		
Versatility	Conform to UL2954, UL2231-1/-2		
Energy Meter	ETL certified		
RCD	Type A or Type B(optional)		
Security design	Over/under voltage protection, overload protection, current leakage protection, grounding protection,lightening surge protection		
DC Plugs	CCS 1 or NACS 5M Cable		
Physical properties			
Warranty	2 years		
Application place	Indoor/Outdoor		
Installation method	Wall mount, pedestal mount (optional)		
Sound noise	<55DB in all directions		
Operating temperature	-20℃ to +50℃		
Humidity	Max.95%(non-regulating)		

Model	L3D-DC30kW	L3D-DC40kW	L3D-DC60kW
Technical features			
Power Input	Up to 30KW	Up to 40KW	Up to 60KW
Input/Output power	480VAC ±10% 3phase 45-65Hz		
	0.98		
Efficiency	>98%		
Measuring accuracy	Level 0.5		
Output voltage range	CCS: 200~1000VDC		
Output current range	0-100A*2	0-125A*2	0-200A*2
Communication	Ethernet / WIFI / 4G / OCPP 1.6 J (TLS)		
User interface	RFID Card and App.		
Display	LCD 7 inch Touch Screen		
Versatility	Conform to UL2954, UL2231-1/-2		
Energy Meter	ETL certified		
RCD	Type A or Type B(optional)		
Security design	Over/under voltage protection, overload protection, current leakage protection, grounding protection,lightening surge protection		
DC Plugs	CCS 1 *2 or NACS*2 or CCS1+NACS 5M Cable		
Physical properties			
Warranty	2 years		
Application place	Indoor/Outdoor		
Installation method	Wall mount, pedestal mount (optional)		
Sound noise	<55DB in all directions		
Operating temperature	-20℃ to +50℃		
Humidity	Max.95%(non-regulating)		

2.2 Dimensions

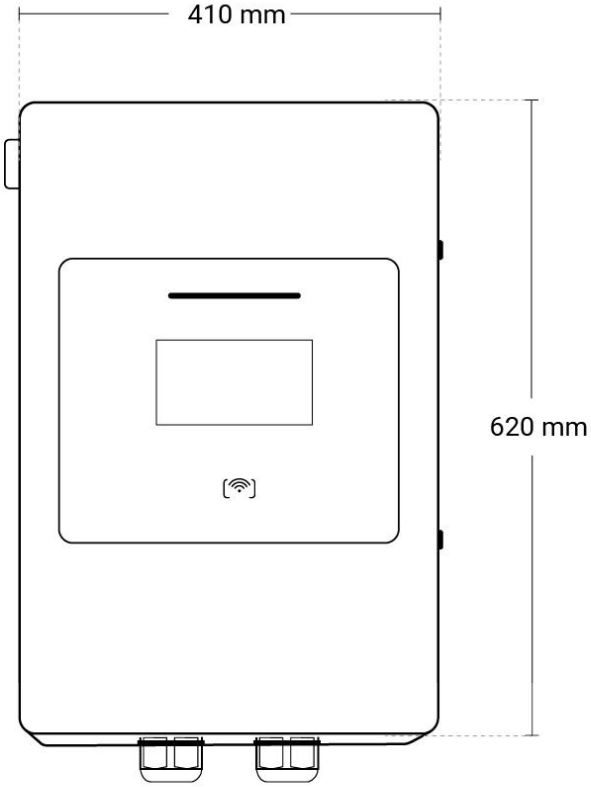

Front View

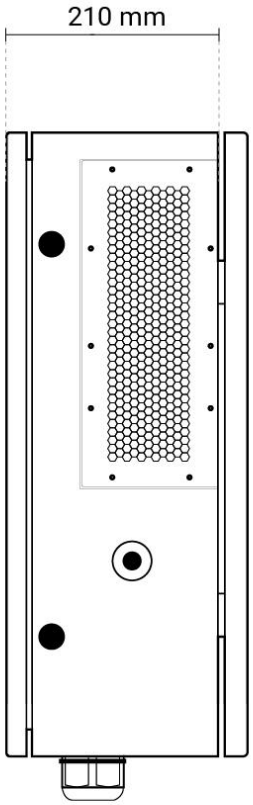

Left View

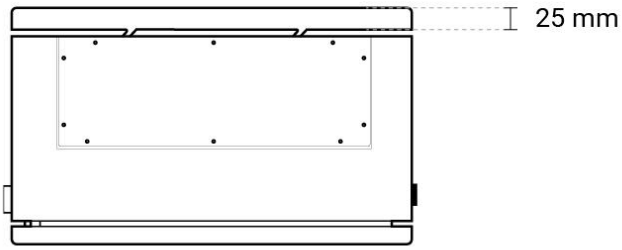

Top View

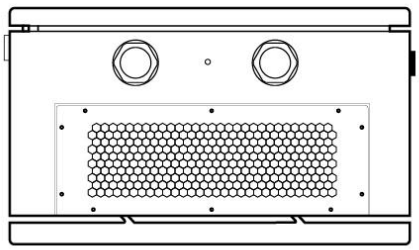

Bottom View

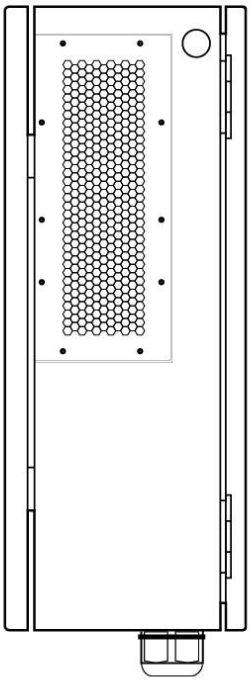

Right View

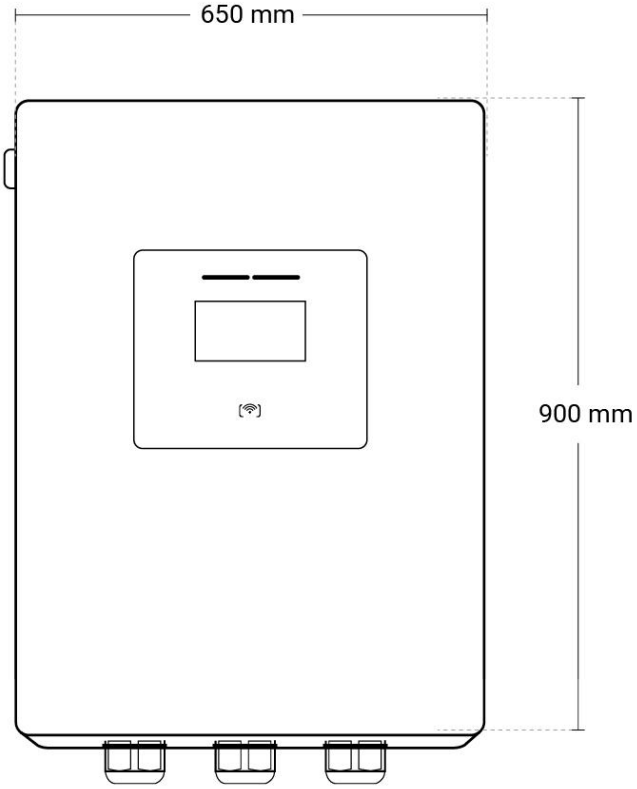

Front View

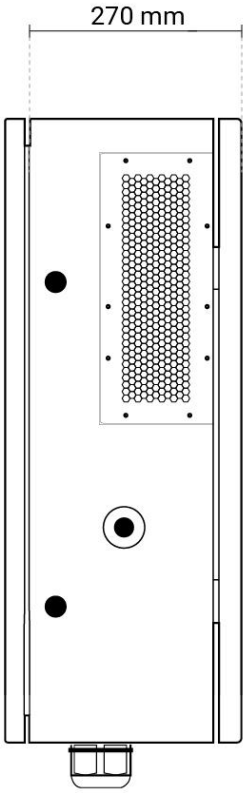

Left View

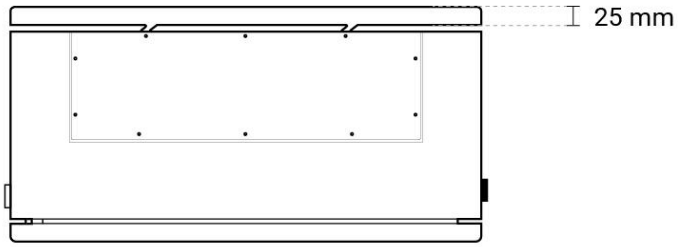

Top View

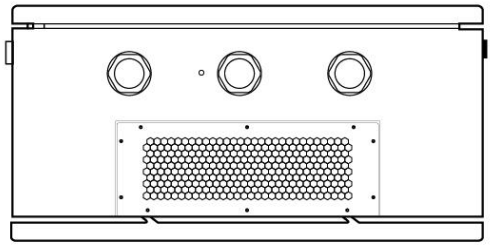

Bottom View

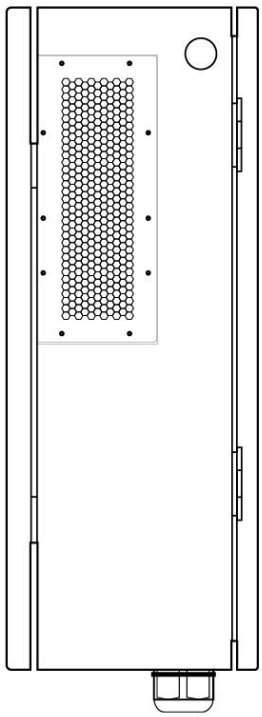

Right View

3. Installation Instruction

Before Installation

- Read all the instructions before using and installing this product.
- Do not use this product if power cable or charging cable have any damage.
- Do not use this product if the enclosure or charging connector are broken or open or if there is damage.
- Do not put any tool, material, finger or other body part into the charging connector or EV connector.

Warning: The product should be installed only by a licensed contractor and/or licensed technician in accordance with all building codes, electrical codes and safety standards.

Warning: The product should be inspected by a qualified installer prior to initial use. Under no circumstances will compliance with the information in this manual relieve user of his /her responsibilities to comply with all applicable codes and safety standards.

- Power feed must be 3 Phase configuration with TN(-S)/ IT/ TT grounding systems.
- In the installation of TN(-S) system: the neutral (N) and the PE of the power distribution are directly connected to the earth. The PE of the charger equipment is directly connected to the PE of power distribution and separate conductor for PE and neutral (N).
- In the installation of IT system: the neutral of the power distribution system is isolated from the earth. The PE of the charger equipment is isolated to the PE of power distribution to the earth.
- In the installation of TT system: the neutral (N) and the PE of the power distribution are directly connected to the earth. The PE of the charger equipment is isolated to the PE of power distribution to the earth.
- The capacity of power supply should be higher than 33.0kVA in order to function correctly.
- The product should be installed in free air area and keep at least 30cm clearance distance to all air vent of the product.
- Need sufficient space for product installation and maintenance, please keep not less than 60cm clearance distance from all around the product.he product should be installed in free air area and keep at least 30cm clearance distance to all air vent of the product.

3.1 Grounding and Safety Requirement

- The product must be connected to a grounded, metal, permanent wiring system. Connections shall comply with all applicable electrical codes.
- Ensure no power is connected at all times when installing, servicing, or maintaining the charger.
- Use appropriate protection when connecting to main power distribution network.
- Use appropriate tools for each task.

CAUTION: The disconnect switch for each un-grounded conductor of AC input shall be provided by installation contractor or technician.

CAUTION: A cord extension set or second cable assembly shall not be used in addition to the cable assembly for connection of the EV to the EVSE.

3.2 Service Wiring

- Ground Connection
  Always connect the Neutral at the service to Earth Ground. If ground is not provided by the electrical service then a grounding stake must be installed nearby. The grounding stake must be connected to the ground bar in the main breaker panel and Neutral connected to Ground at that point.

- 480Vac(Line to Line)Three-Phase

CAUTION!
This is feed from Wye-connection power grid, the Wall Mount DC Fast Charger can connect to L1, L2 or L3, and Neutral. Earth ground must be connected to neutral at only one point, usually at the breaker panel.

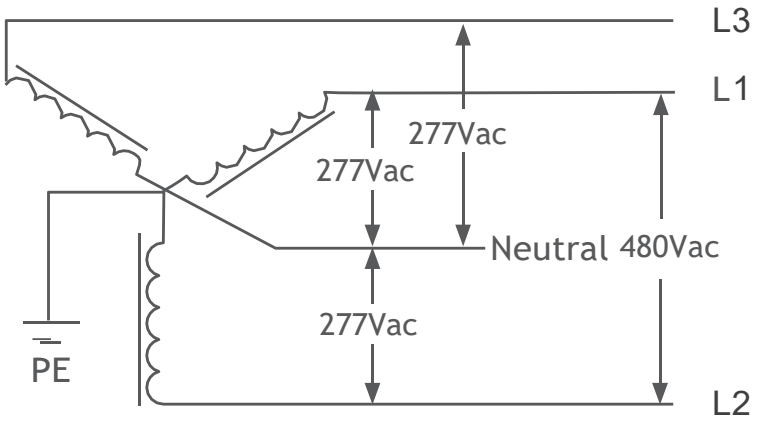

480V Three-Phase Wiring Connection

DANGERS
Be Aware of High Voltage!

WARNING!
Earth Connection is Essential!

3.3 Unpack the charger

WARNING!
Charger weight might >80Kg!
Be careful during unpack process.

STEP 1: Remove the surrounding boards

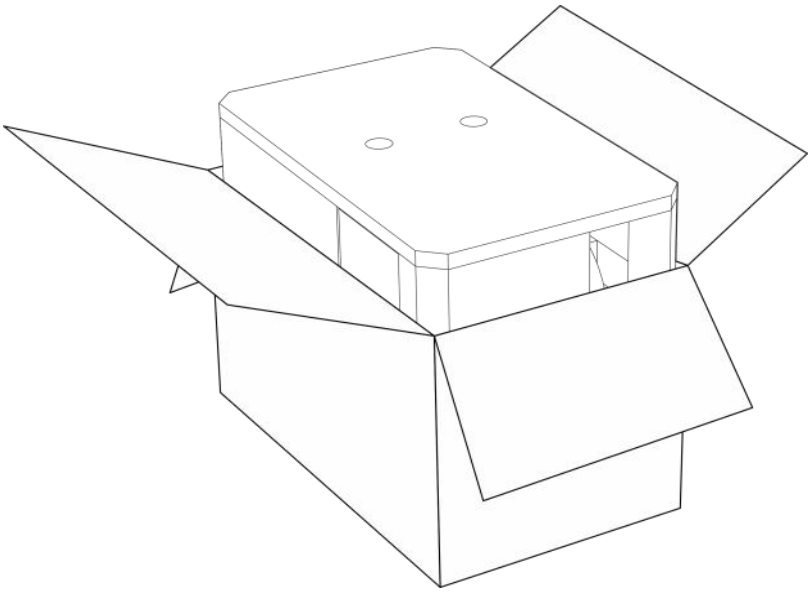

STEP 2: Remove the packaging film and the paper cover. Accessories (wall mount) are packed in a carton.

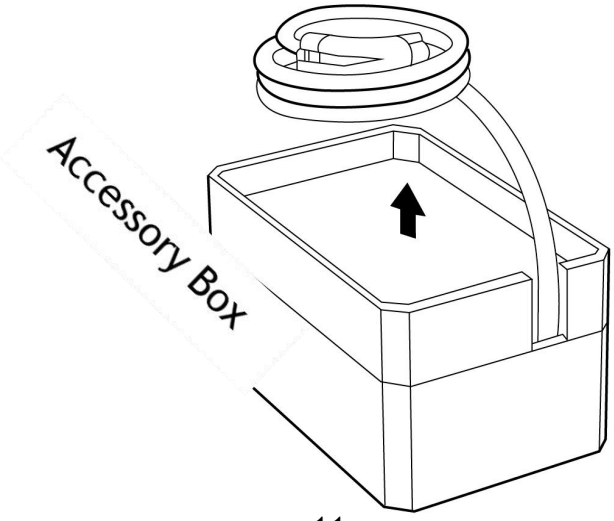

STEP 3: Remove the surrounding cardboard and film. Take out the Charger and Gun holders.

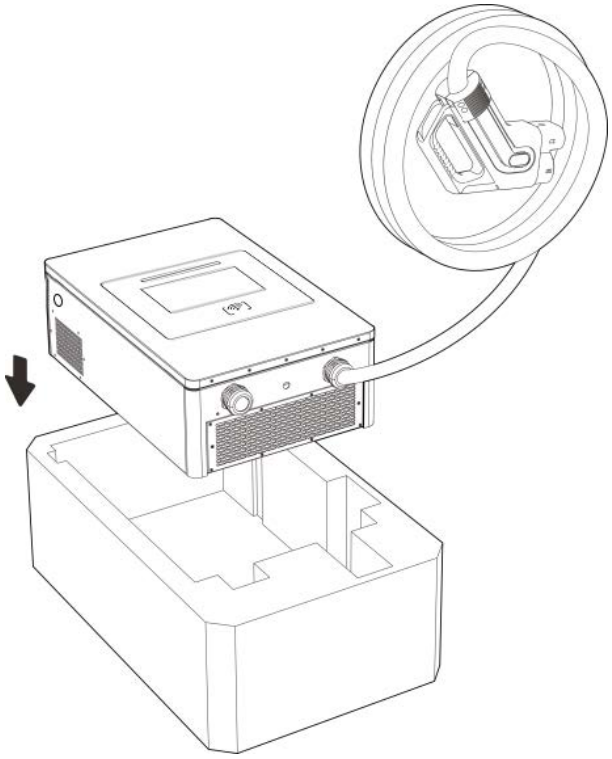

3.4 Accessory

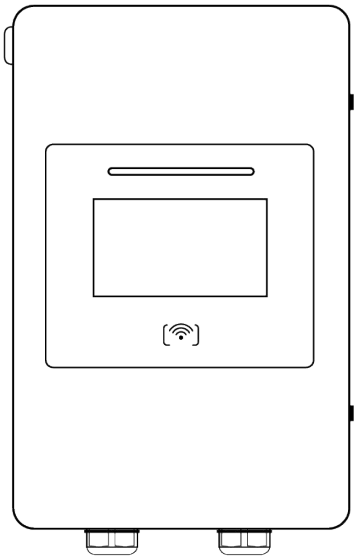			
	User Manual (x1)	φ6 Expansion Pipe (x4)	M4*40 Screw (x6)
	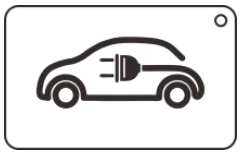	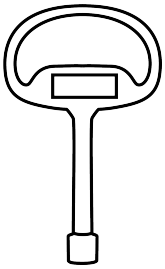	
Wallbox(x1)	RFID CARD (x2)	Key (x2)	SD card(x1)

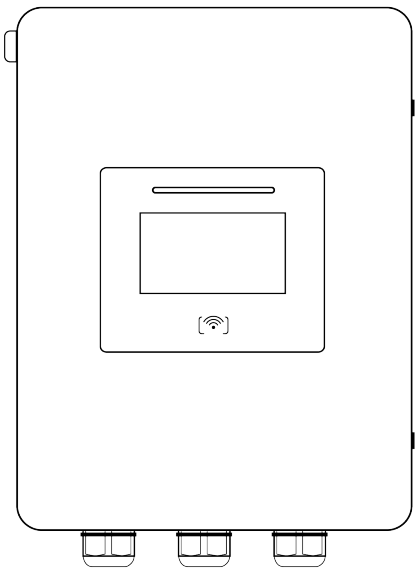			
	User Manual (x1)	φ6 Expansion Pipe (x4)	M4*40 Screw (x6)
	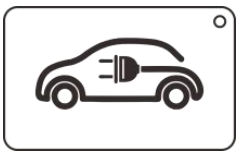	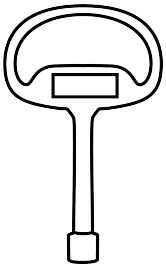	
Wallbox(x1)	RFID CARD (x2)	Key (x2)	SD card(x1)

3.5 Tools for Mounting

Type	Description
Philips Screwdriver	No. 2 and 3
Shifting Wrench	8" (24mm)
Ball-Head Hex Key	2.5mm and 5mm
Socket Screwdriver	No. 8 ,10 and 17
Electrical Tape	Black / 15mm Width
AC Input Cable of 30KW	**16mm^2 Cable x 5 (L1,L2,L3,N,PE)**
AC Input Cable of 40KW	**25mm^2 Cable x 5 (L1,L2,L3,N,PE)**
AC Input Cable of 60KW	**35mm^2 Cable x 5 (L1,L2,L3,N,PE)**
Crimping Pliers for Ring Terminal	Applied for 16- 25mm^2
Machine Drill	
Wire Cutters	
Level Ruler	

3.6 Tools for Inspection

Type	Description
EV or EV Simulator	Meet CCS1 standard
Multiple Meter	1000V
Current Probe	100Amp
RFID Authorized Card	
RFID No Valid Card	
Door Key	
Needle-Nose Plier	
Laptop or PC & CAT6 cable	For Charger Configuration

3.7 Mounting on the wall or pedestal

STEP 1. Place the wall-mounted bracket between 600mm (24 inches) and 1.2m (4 feet) above the floor, and then attach 4 pcs 3/8”expansion screws to the wall-mounted bracket.

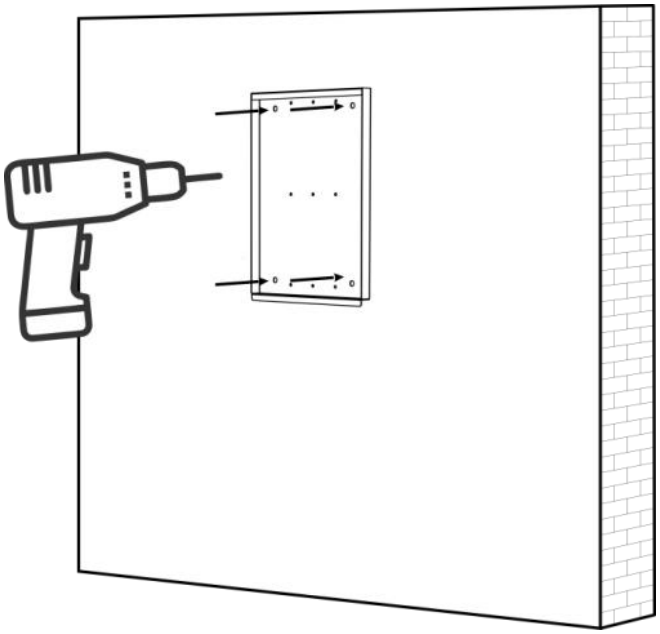

STEP 2. Install the four tenons on the rear side of the charger into the grooves on the wall-mounted bracket.

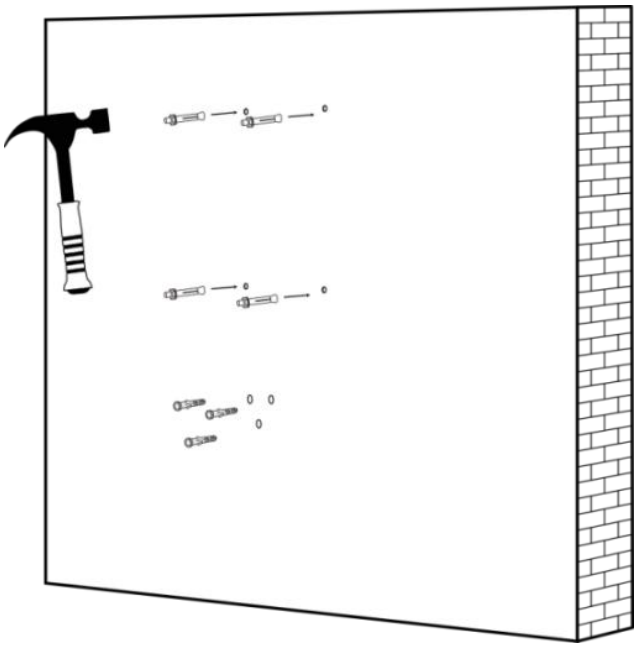

STEP 3. Screw 2 sets M6 screws to the bottom of the charger to fix the charger on the bracket.

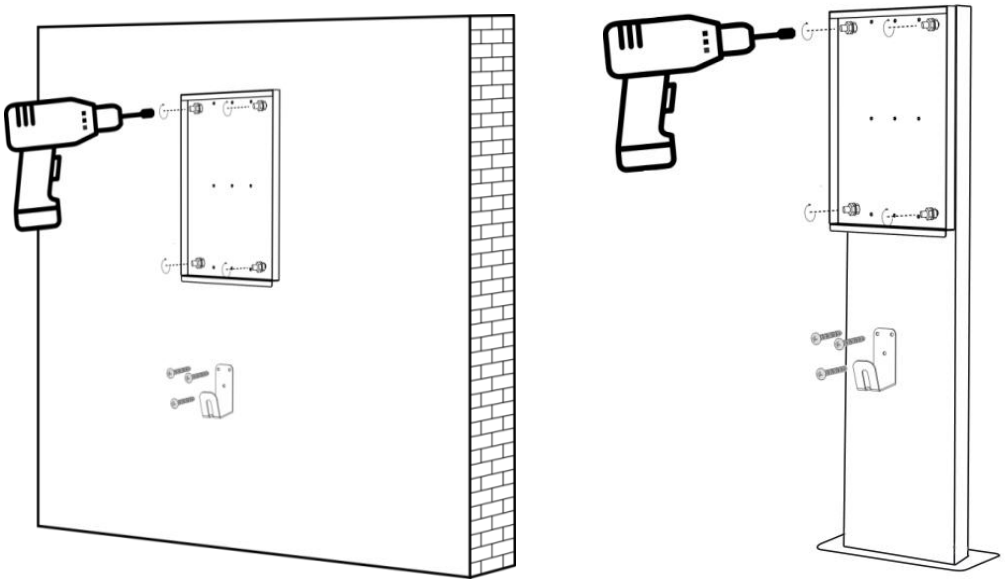

STEP 4. Keep the hook-shape holders as cable holder or disassemble them if not necessary.

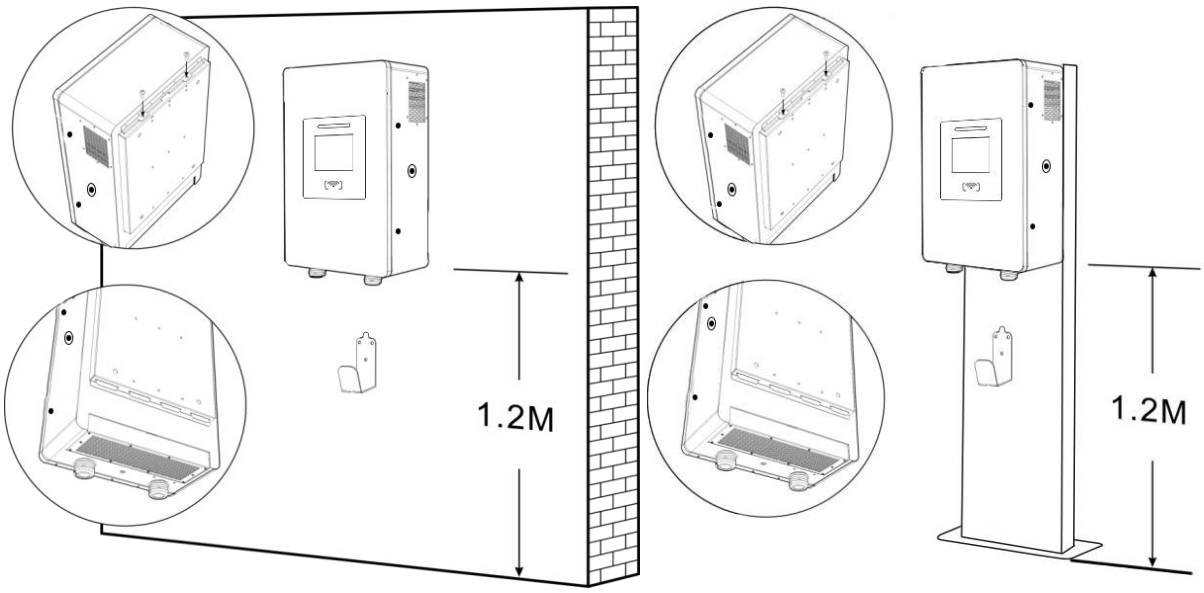

STEP 5. Please use XLPE power cables or equivalent for AC input connection, power cable outer diameter is between 32 and 40mm. Each wire shall be crimped with the corresponding terminal before feeding. And then feeding the cable from bottom side and passing through the cable gland. L1, L2, L3, N, and PE are connected to the docking terminals as shown in the figure below.

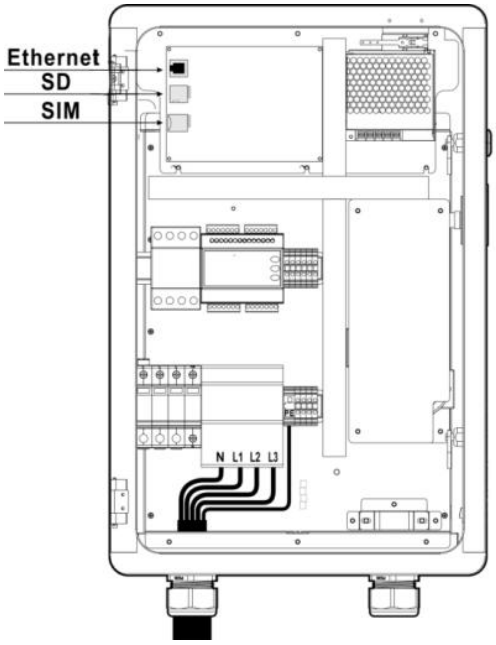

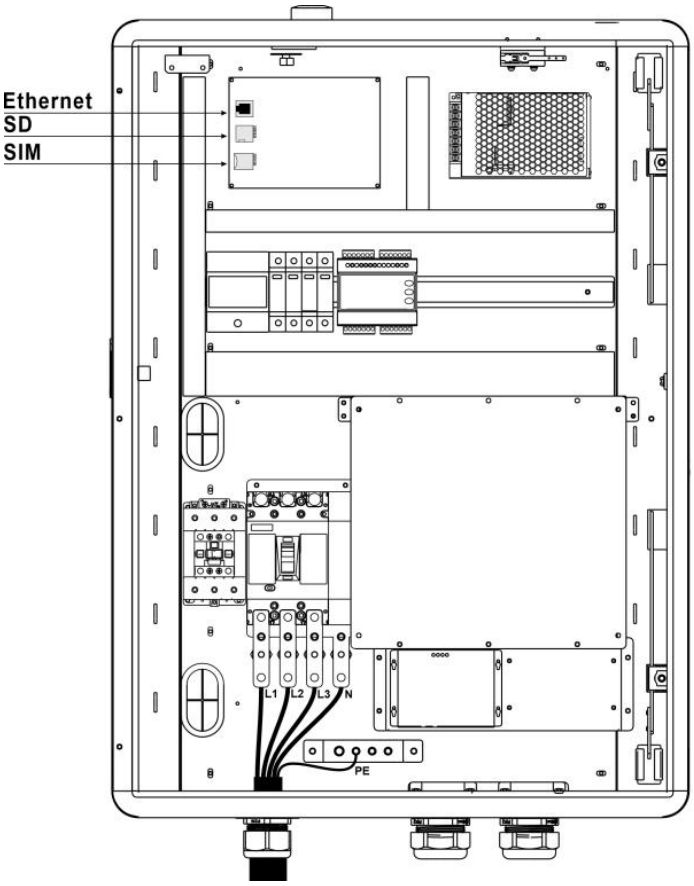

3.8 Installation Inspection & Debugging

Description	Status	Remark
Environment		
Ambient Temperature		
Ambient Humidity		
Sunshade		Recommended but not required.
Rain Canopy		Recommended but not required.
Air Circulation / Drafty		
Dust Level		
Anti-Vandalism Measures		
External Infrastructure		
Input Wirings & Terminals		Type/ Length/ Cross Section
Key & Lock of Cabinet Door		
Fixing Screws		Type / No
No Fuse Breaker (NFB)		Notice: Current rating of NFB shall be higher than 63 Amp
Residual Current Device (RCD)		Notice: Maximum RCD residual current shall not excess 30mA
Input Electricity Capacity		
Input Electricity Configuration		Wye
Grounding Resistance		<50Ω
Grounding System		
Input Voltage & Frequency		
Network Connection & Quality		LAN/ Wi-Fi/4G
EVSE (Non-Powered)		
Outlook		
Labeling & Warning Signs		
Package (Accessory) List		
Robustness of Input Wirings		
EVSE (Power On)		
Screen On		
Acoustic Noise		
Screen Display & Function		
Time Display Correctly		

Network Connection Quality		
Cooling Fans Operation & Noise		
Led Status Indication		
EVSE Setting		
Function of Engineer Mode		
Version of H.W. & F.W.		
Remote Control & Monitoring		
Backend Server Connection		
EVSE Charging		
User Authorization –RFID		
User Authorization –QR Code		
User Authorization –Others.		
Waiting Time of Connection Check		
Reading of Each Display Item		
Full Charge Test		
Function of Electronic Lock		
Reading of Engineer Mode		
Airflow & Noise of Cooling Fan		
Charging Record (log) Upload		
Remote Control & Monitoring		
EVSE System Power Button		
Emergency Stop Button		

4. Operation Process

4.1 Network Setting

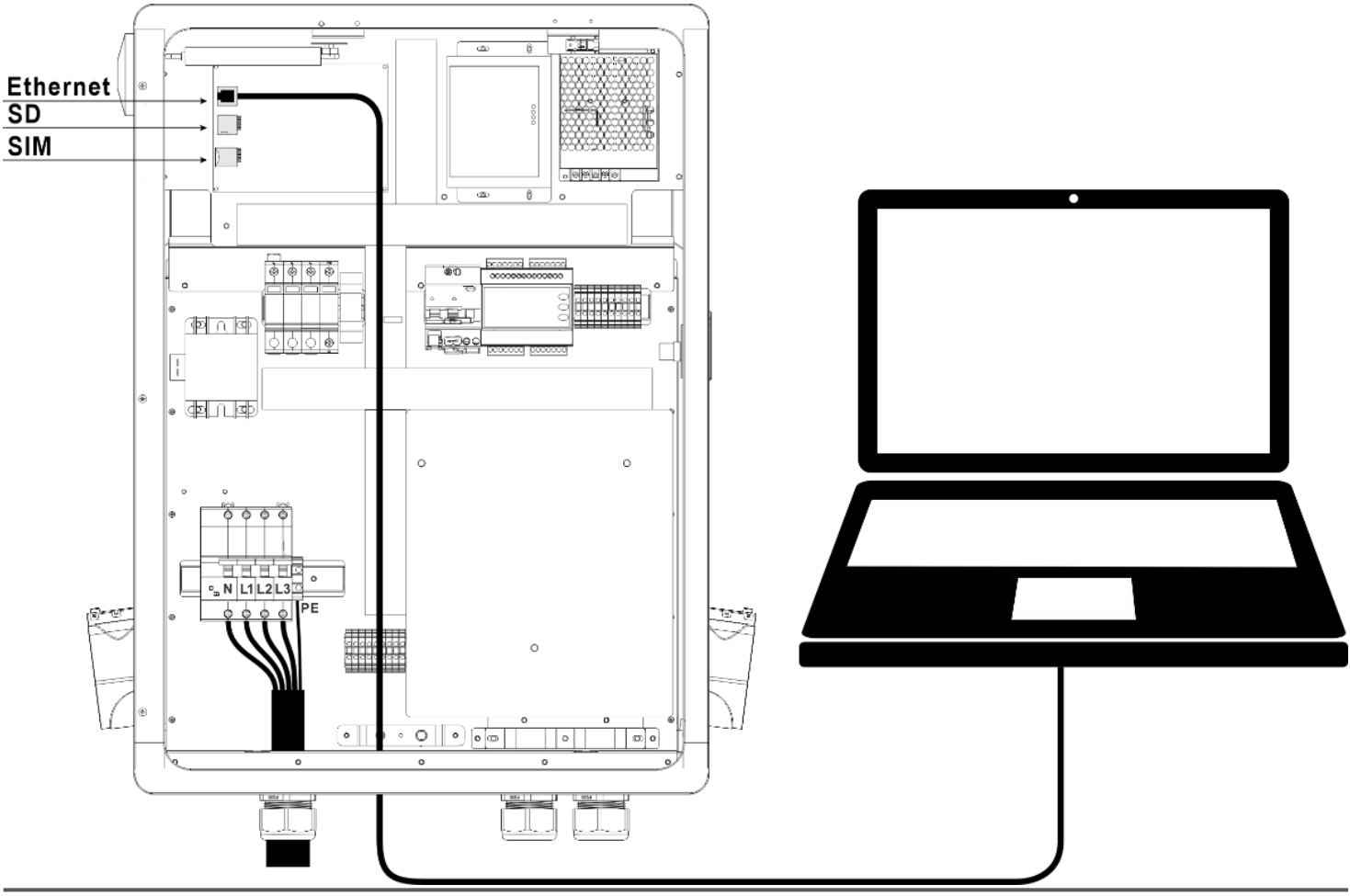

–

Wi-Fi Network Setting

Laptop with RJ45 interface.

Connect RJ45 cable from Laptop to charger's RJ45 port.

Setup parameters in the Webservice.

Step 1. Open web service browser, type the IP address of charger"192.168.2.5:8080" into the URL bar to access the web
page of charger.
User: admin

Password: 12345678

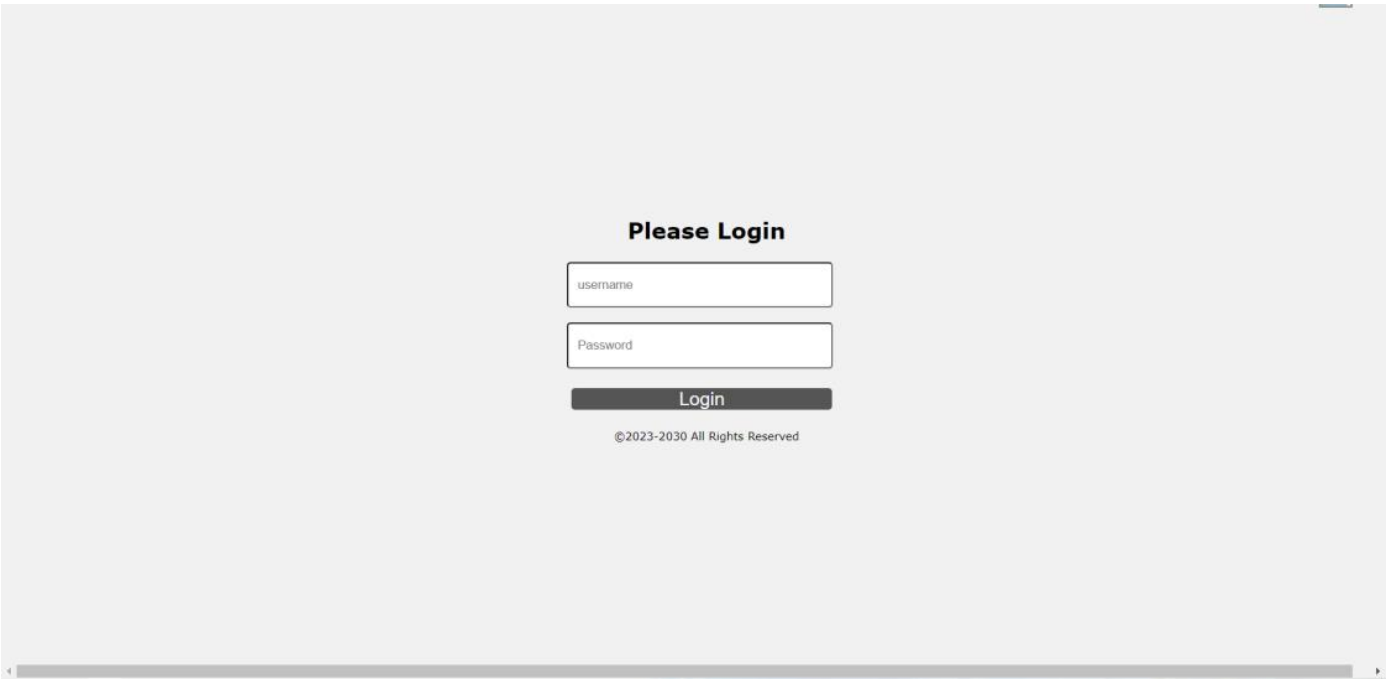
Please Login
username
Password
Login
©2023-2030 All Rights Reserved

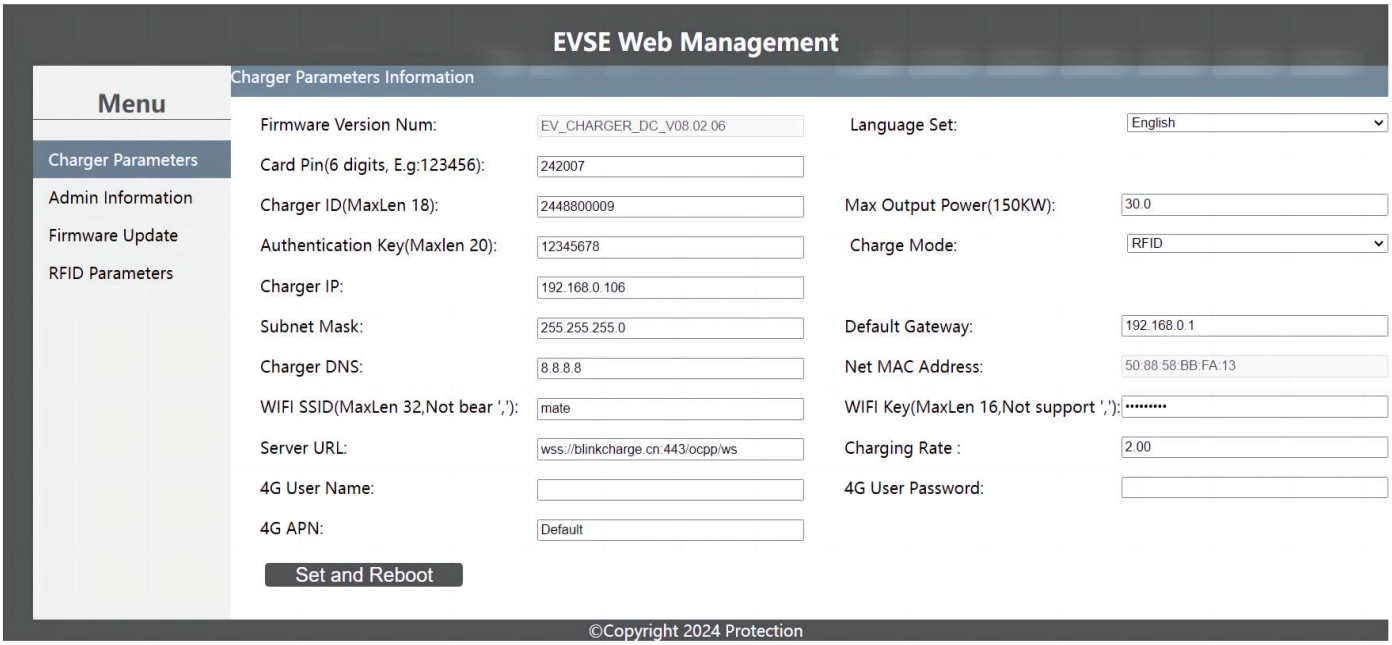
EVSE Web Management
Menu
Charger Parameters
Admin Information
Firmware Update
RFID Parameters
Charger Parameters Information
Firmware Version Num:
EV_CHARGER_DC_V08.02.06
Language Set:
English
Card Pin(6 digits, E.g:123456):
242007
Charger ID(MaxLen 18):
2448800009
Max Output Power(150KW):
30.0
Authentication Key(Maxlen 20):
12345678
Charge Mode:
RFID
Charger IP:
192.168.0.106
Subnet Mask:
255.255.255.0
Default Gateway:
192.168.0.1
Charger DNS:
8.8.8.8
Net MAC Address:
50:88:58:BB:FA:13
WIFI SSID(MaxLen 32,Not bear ','):
mate
WIFI Key(MaxLen 16,Not support ','):
Server URL:
wss://blinkcharge.cn:443/ocpp/ws
Charging Rate :
2.00
4G User Name:
4G User Password:
4G APN:
Default
Set and Reboot
©Copyright 2024 Protection

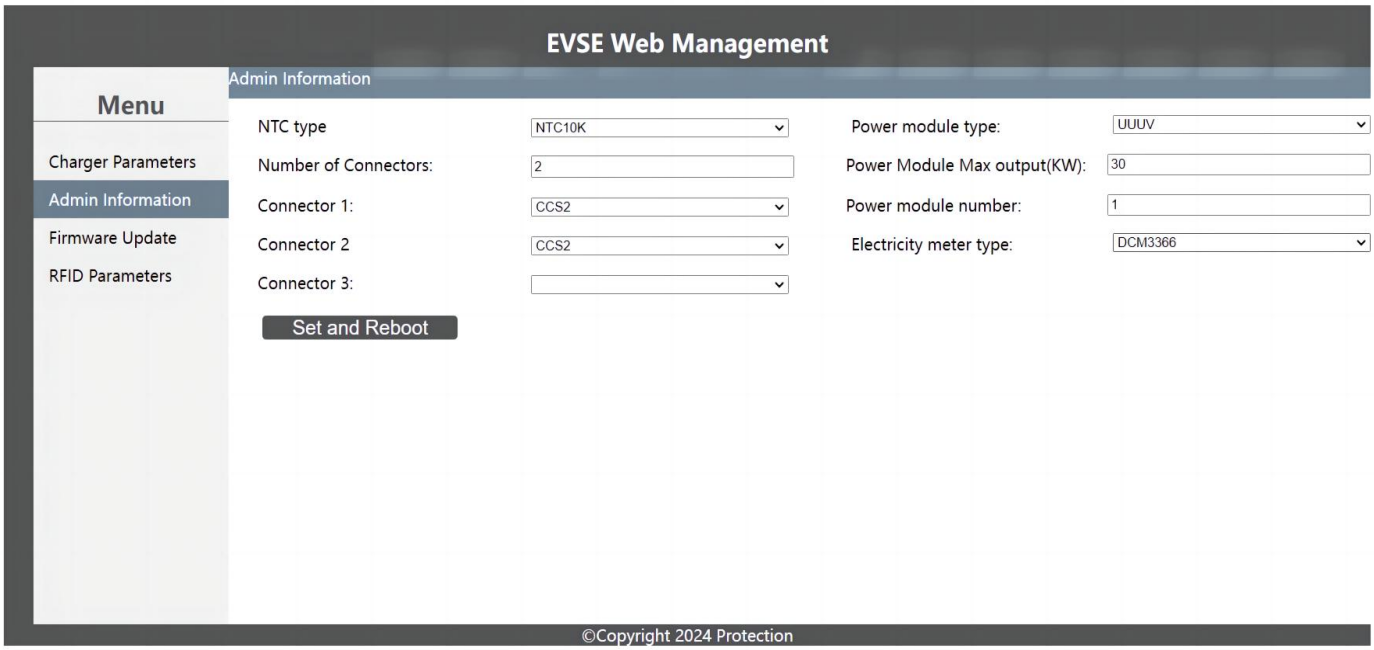
EVSE Web Management
Menu
Charger Parameters
Admin Information
Firmware Update
RFID Parameters
Admin Information
NTC type
NTC10K
Number of Connectors:
2
Connector 1:
CCS2
Connector 2
CCS2
Connector 3:
Power module type:
UUUV
Power Module Max output(KW):
30
Power module number:
1
Electricity meter type:
DCM3366
Set and Reboot
©Copyright 2024 Protection

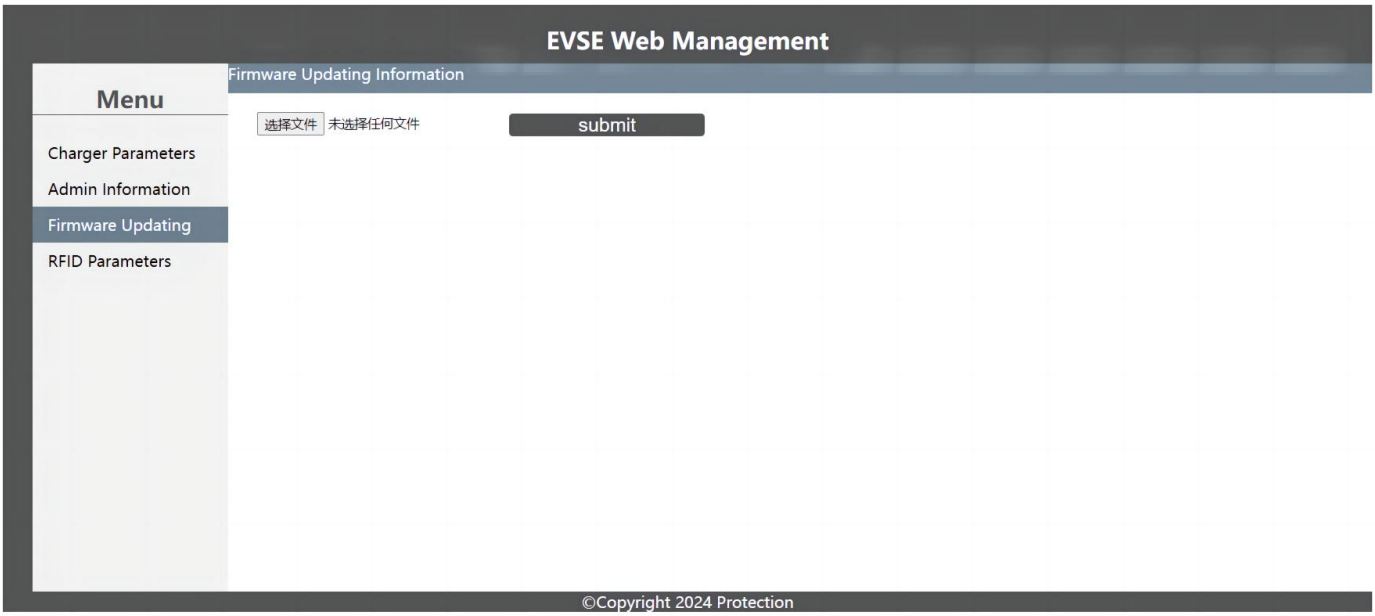
EVSE Web Management
Menu
Charger Parameters
Admin Information
Firmware Updating
RFID Parameters
Firmware Updating Information
选择文件 未选择任何文件
submit
©Copyright 2024 Protection

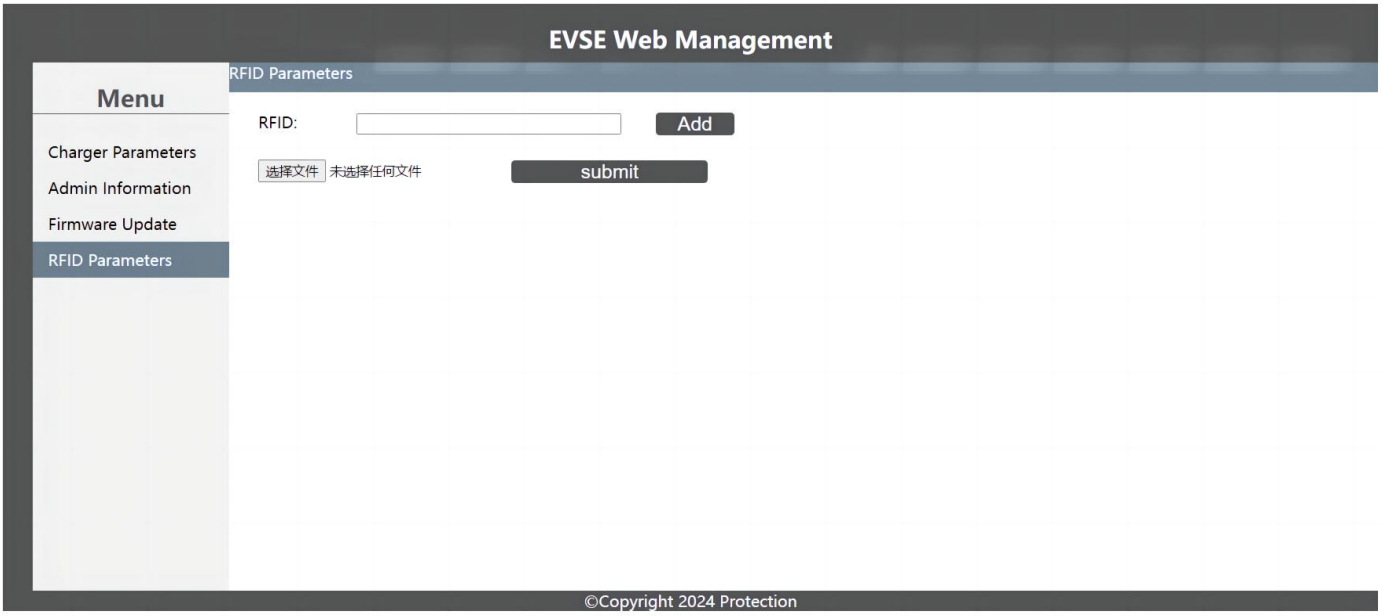
EVSE Web Management
Menu
Charger Parameters
Admin Information
Firmware Update
RFID Parameters
RFID Parameters
RFID:
Add
选择文件 未选择任何文件
submit
©Copyright 2024 Protection

Step 2.

（1）Select Wi-Fi Module

Select Wi-Fi modes and fill in SSID and Password according to your application, if not required, just keep default.

（2）Version number, charging pile number Server address can be changed&set;

Step 3. Set the number and type of charging piles,

Module type and number. temperature. Meter etc can be changed also;

Step 4. Firmware Upgrade:

Select an upgrade file to perform the upgrade

Step 5. RFID Parameters

Select the RFID file to import the binding card function

4.2 Troubleshooting

- Please follow the instruction in the table when errors occur during the charging process.
- Or please contact the DC Quick Charger provider for further instructions.
- If an emergency occurs push the Emergency Stop Button to stop charging immediately.

Error List

Screen Show	Description	Solution
1	Emergency stop	Rotate the button clockwise to reset the charger
2	CCS output fuse blew	Replace the fuse
3	AC input contactor 1 welding	Replace the contactor
4	CCS output relay welding	Replace the Relay
5	CCS connector temperature sensor broken	Replace the sensor
6	Relay control module /smart box broken	Replace the Relay control module
7	CCS Power module fault	Replace the CCS Power module
8	Maximum Output Current setup error	Reset the correct value
9	Maximum Output Voltage setup error	Reset the correct value
10	BLE module broken	Replace the BLE module
11	4G module broken	Replace the 4G module
12	Ethernet BLE module broken	Replace the Ethernet BLE
13	wifi module broken	Replace the wifi module
14	CCS connector OTP	Reset the OTP value
15	SPD trip	Replace the SPD Module
16	CCS ground fault detection timeout (GFD)	Check the Ground line
17	RFID module communication fail	Check Communication line with RFID
18	Power module communication fail	Check can line with power module
19	Door open	Closed the door &recharge with vehicle
20	System fan decay	Replace the fan
21	AC Ground Fault	Check the Ground line
22	CCS EV communication Fail	Check Connecting wire with vehicle

5. Maintenance

5.1 General Maintenance

- The DC Fast Charger is cooled by forced air. Please keep charger in a ventilated location and do not block the air vents of the DC Fast Charger .
- Please clean or replace the air filters regularly to ensure the DC Fast Charger works properly.
- Clean the DC fast Charger at least three times a year, keep the exterior clean at all times.
- Clean the outside of the cabinet with damp cloth or wet cotton towel, only use low-pressure tap water and cleaning agents with PH level between 6 to 8.
- Do not apply high-pressure water jets.
- Do not use cleaning agents with abrasive components and do not use abrasive tools. Improper cleaning agents might spoiled coating, painting, surface, brightness and durability of all exterior parts.
- If there is water intruding into the DC Fast Charger then please cut off the power source immediately and contact the DC Fast Charger provider for repair.
- Please make sure the charging connector is returned to the holder of the charging connector after charging to prevent damage.
- If there is damage to the charging connector, charging cable or holder of the charging connector then please contact the DC Fast Charger provider.
- When using the DC Fast Charger please handle properly. Do not strike or scrape the cabinet or touchscreen.
- If the enclosure or touch screen is broken, cracked, open or shows any other indication of damage then please contact the Standalone DC Fast Charger provider.

WARNING: Danger of electrical shock or injury. Turn OFF power at the panel board or load center before working on the equipment or removing any component. Do not remove circuit protective devices or any other component until the power is turned OFF.

- Disconnect electrical power to the DC Fast Charger before any maintenance work to ensure it is separated from the supply of AC mains. Failure to do so may cause physical injury or damage to the electrical system and charging unit.

Note:

- Before switching off main breaker to begin maintenance, please record the status code number on the LCD monitor.
- After switching off the key switch the circuit before the main terminal is still hazardous. Only visual inspection can be operated.
- Maintenance of the DC Fast Charger shall be conducted only by a qualified technician.
- After opening the front door of the DC Fast Charger, turn off the main breaker and auxiliary breaker before any maintenance work.
- Replace the ventilation filter every six to twelve months.

5.2 Limited Product Warranty

The warranty period for this charger is two years.

Any spare parts provided by manufacturer and used as replacements for repair are covered by a five-year guarantee.

Replacement and repair parts manufactured by alternative manufacturers to those on the maintenance parts are only allowed if authorized by manufacturer.

Warranty Exclusions:

- Damage or rendered non-functional as a result of power surges, lighting, earthquake, fire flood, pest damage, abuse, accident, misuse, negligence or failure to maintain the product or other event beyond manufacturer reasonable control or not arising from normal operating condition.
- Cosmetic or superficial defect, dents, marks or scratches after use.
- Components which are separate from the product, ancillary equipment and consumables, such as door key, RFID card, air filter, fuse, cable, wires and connectors.
- Damage as a result of modifications, alterations or disassembling which were not pre-authorized in writing by manufacturer.
- Damage due to the failure to observe the applicable safety regulations governing the proper use of the product.
- Installed or operated not in strict conformance with the documentation, including without limitation, not ensuring sufficient ventilation for the product as described in LinkPower installation instruction.

If a defect in the product arises and valid claim is received within the warranty period, your sole and exclusive remedy will be for manufacturer, at its sole discretion and to extent permitted by law, to

1. Repair the defect in the product at no charge, using new or refurbished parts.
2. Exchange the product with new or refurbished product that is functionally equivalent to the original product.

Any remedy hardware product will be warranted for the remainder of the original warranty period or 90 days from delivery to the customer, whichever is longer.

In order to receive the remedy set for above, you must contact manufacturer during the warranty period and provide the model number, series number, proof of purchase, and date of purchasing.

This device complies with Part 15 of the FCC Rules. Operation is subject to the following two conditions: (1) This device may not cause harmful interference, and (2) this device must accept any interference received, including interference that may cause undesired operation.

Caution: Changes or modifications not expressly approved by the party responsible for compliance could void the user's authority to operate the equipment.

NOTE: This equipment has been tested and found to comply with the limits for a Class B digital device, pursuant to part 15 of the FCC Rules. These limits are designed to provide reasonable protection against harmful interference in a residential installation. This equipment generates uses and can radiate radio frequency energy and, if not installed and used in accordance with the instructions, may cause harmful interference to radio communications. However, there is no guarantee that interference will not occur in a particular installation. If this equipment does cause harmful interference to radio or television reception, which can be determined by turning the equipment off and on, the user is encouraged to try to correct the interference by one or more of the following measures:
--Reorient or relocate the receiving antenna.
--Increase the separation between the equipment and receiver.
--Connect the equipment into an outlet on a circuit different from that to which the receiver is connected.
--Consult the dealer or an experienced radio/TV technician for help.

This equipment complies with FCC radiation exposure limits set forth for an uncontrolled environment. This equipment should be installed and operated with minimum distance 20cm between the radiator & your body.