ZENIKO

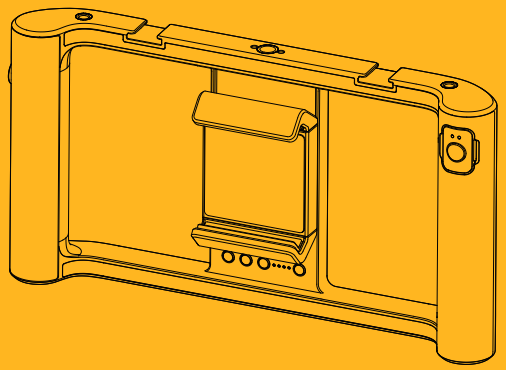

MR11

Smartphone Video Rig

Zeniko Technology Co., LTD

Add.: 1208 Room, Jinshan Building, No.5033, Shennan East Road, Xinwei Community, Guiyuan Street, Luohu District, Shenzhen City

Tel: +86-755-25106331

www.zeniko.com

Made in China | 705-MR1100-00

FOREWORD

Thank you for purchasing!

This smartphone video rig MR11 can turn your smartphone into portable and handheld shooting device with the following characteristics. Its six 1/4" screw ports, one Arri positioning hole and two coldshoe slots greatly improve the expandability. Detachable Bluetooth remote control supports shooting and recording from far distance. Besides, it can also charge the smartphone wirelessly or with a charging cable. With a clampable width of 57mm to 95mm, MR11 is suitable for smartphone photography, live streaming, vlogging, microfilm production and etc.

⚠ WARNING

- ⚠ Keep out of reach of children. Close supervision is necessary when any appliance is used by or near children. Do not leave appliance unattended while in use.
- ⚠ If the light beads are damaged or deformed by heat, stop using and contact the manufacturer, service agent or qualified maintenance in time to replace.
- ⚠ This appliance is not waterproof device. Keep it dry, do not immerse this appliance in water or other liquids. Do not use this appliance in rainy, humid, dusty in overheated environments.
- ⚠ Unauthorized service will void the warranty.
- ⚠ Changes made to the specifications or designs may not be reflected in this manual.

NAME OF PARTS

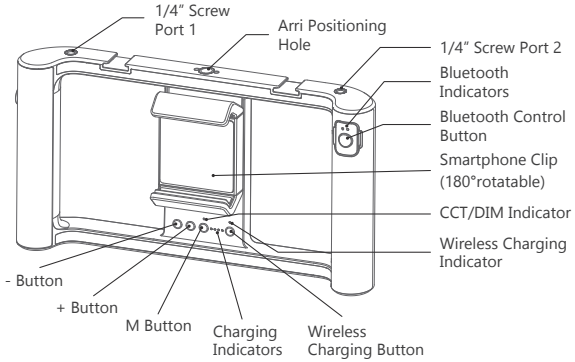

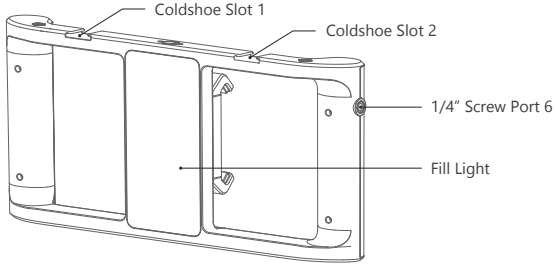

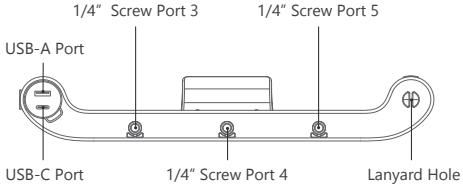

WHAT'S INSIDE

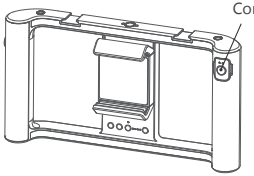

Smartphone video Rig ×1

Charging
Cable x1

Instruction
Manual ×1

INSTRUCTIONS FOR INDICATORS

Bluetooth Indicators

Long press the Bluetooth control button, the Bluetooth indicators constant on blue means the Bluetooth is turned on, while the indicators off means the Bluetooth is turned off.

Bluetooth On

Bluetooth Off

Charging Indicators

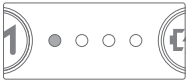

One charging indicator lights up means the battery level is 0% to 25%, please charge in time.

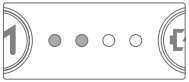

Two charging indicators light up means the battery level is 25% to 50%.

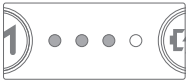

Three charging indicators light up means the battery level is 50% to 75%.

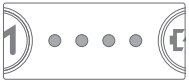

Four charging indicators light up means the battery level is 75% to 100%.

CCT/DIM Indicator

Press the M button, the CCT/DIM indicator constant on white means DIM adjusting mode, the CCT/DIM indicator constant on yellow means CCT adjusting mode.

Wireless Charging Indicator

Press and hold the wireless charging button, the wireless charging indicator constant on white means wireless charging mode is on, then users can wirelessly charge the smartphones by clipping it properly.

Press and hold the wireless charging button, the wireless charging indicator off means the wireless charging mode is turned off.

POWER SWITCH

Press and hold the M button to turn on or off the device, the CCT/DIM indicator will light up in power on status.

CCT ADJUSTMENT

Press the M button in power on status can switch CCT/DIM adjusting mode, the CCT/DIM indicator will be constant on yellow in CCT adjusting mode. Press the – button or + button to adjust CCT among: 2800K, 3200K, 4300K, 5600K and 6500K.

DIM ADJUSTMENT

Press the M button in power on status can switch CCT/DIM adjusting mode, the CCT/DIM indicator will be constant on white in DIM adjusting mode. Press the – button or + button to adjust DIM among five levels.

WIRELESS CHARGING/WIRED CHARGING

MR11 can charge the smartphone wirelessly or with a charging cable.

Wireless Charging: Press and hold the wireless charging button, the wireless charging indicator constant on white means wireless charging mode is on, then users can wirelessly charge the smartphones by clipping it properly.

Note: The wireless charging parts may vary in different phone brands, users need to adjust the contact positions accordingly.

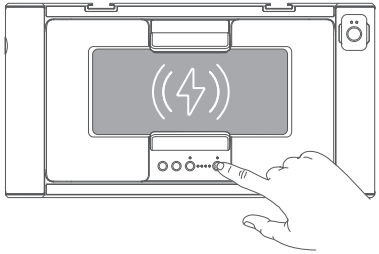

Wired Charging: Turn on the device, connect the smartphone to the USB-A port with the USB-A charging cable to charge it.

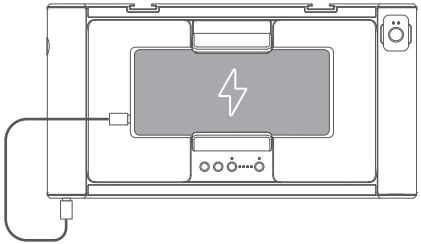

BLUETOOTH CONTROL

Press and hold the Bluetooth control button until the indicator is constant on blue, then the Bluetooth is turned on. Connect to the device "ZENIKO-MR11" via smartphone Bluetooth, then users can control the smartphone to shoot and record from far distance.

Press and hold the Bluetooth control button, the indicators off means the Bluetooth is turned off.

TECHNICAL DATA

Model	MR11
Power Supply	5V ⎓ ~~1.5~~ 2A
Input Power	Max.≈
Output Parameters	Wireless: 5V 1A(Max.) Wired: 5V 2A(Max.)
CCT	2800K, 3200K, 4300K, 5600K, 6500K
DIM	Five levels
CRI	≥95
TLCI	≥95
Illuminance Data	
Work Environment Temperature	-10℃~+40℃
Dimension	10.7″*5.6″*1.5″
Net Weight ≈	438g

Specifications and data may subject to changes without notice.

FCC STATEMENT

This device complies with part 15 of the FCC Rules. Operation is subject to the following two conditions:
(1) This device may not cause harmful interference, and
(2) this device must accept any interference received, including interference that may cause undesired operation.

Any Changes or modifications not expressly approved by the party responsible for compliance could void the user's authority to operate the equipment.

Note: This equipment has been tested and found to comply with the limits for a Class B digital device, pursuant to part 15 of the FCC Rules. These limits are designed to provide reasonable protection against harmful interference in a residential installation. This equipment generates uses and can radiate radio frequency energy and, if not installed and used in accordance with the instructions, may cause harmful interference to radio communications. However, there is no guarantee that interference will not occur in a particular installation. If this equipment does cause harmful interference to radio or television reception, which can be determined by turning the equipment off and on, the user is encouraged to try to correct the interference by one or more of the following measures:
-Reorient or relocate the receiving antenna.
-Increase the separation between the equipment and receiver.
-Connect the equipment into an outlet on a circuit different from that to which the receiver is connected.
-Consult the dealer or an experienced radio/TV technician for help.
The device has been evaluated to meet general RF exposure requirement.
The device can be used in portable exposure condition without restriction.

The device has been evaluated to meet general RF exposure requirement.
The device can be used in portable exposure condition without restriction.
The use distance is not more than 5mm.

WARNING

Operating frequency:2402MHz – 2480MHz（BT）

DECLARATION OF CONFORMITY

Zeniko Technology Co., LTD hereby declares that this equipment are in compliance with the essential requirements and other relevant provisions of Directive 2014/53/EU. In accordance with Article 10(2) and Article 10(10), this product is allowed to be used in all EU member states.For more information of DoC, Please click this web link:http://www.zeniko.com/EU/MR11.PDF.
The device complies with RF specifications when the device used at 0mm from your body.

WARRANTY

Dear customers, as this warranty card is an important certificate to apply for our maintenance service, please fill in the following form in coordination with the seller and safe-keep it. Thank you!

Product Information	Model	Product Code Number
Customer Information	Name	Contact Number
	Address	
Seller Information	Name	
	Contact Number	
	Address	
	Date of Sale	
Note:		

Note: This form shall be sealed by the seller.

Applicable Products

The document applies to the products listed on the Product Maintenance Information (see below for further information). Other products or accessories (e.g. promotional items, giveaways and additional accessories attached, etc.) are not included in this warranty scope.

Warranty Period

The warranty period of products and accessories is implemented according to the relevant Product Maintenance Information. The warranty period is calculated from the day(purchase date) when the product is bought for the first time, And the purchase date is considered as the date registered on the warranty card when buying the product.

How to Get the Maintenance Service

If maintenance service is needed, you can directly contact the product distributor or authorized service institutions. You can also contact the Godox after-sale service call and we will offer you service. When applying for maintenance service, you should provide valid warranty card. If you cannot provide valid warranty card, we may offer you maintenance service once confirmed that the product or accessory is involved in the maintenance scope, but that shall not be considered as our obligation.

Inapplicable Cases

The guarantee and service offered by this document are not applicable in the following cases: ①. The product or accessory has expired its warranty period; ②. Breakage or damage caused by inappropriate usage, maintenance or preservation, such as improper packing, improper usage, improper plugging in/out external equipment, falling off or squeezing by external force, contacting or exposing to the improper temperature, solvent, acid, base, flooding and damp environments, etc; ③. Breakage or damage caused by non-authorized institution or staff in the process of installation, maintenance, alternation, addition and detachment; ④. The original identifying information of product or accessory is modified, alternated, or removed; ⑤. No valid warranty card; ⑥. Breakage or damage caused by using illegally authorized, nonstandard or non-public released software; ⑦. Breakage or damage caused by force majeure or accident; ⑧. Breakage or damage that could not be attributed to the product itself. Once met these situations above, you should seek solutions from the related responsible parties and Godox assumes no responsibility. The damage caused by parts, accessories and software that beyond the warranty period or scope is not included in our maintenance scope. The normal discoloration, abrasion and consumption are not the breakage within the maintenance scope.

MAINTENANCE AND SERVICE SUPPORT INFORMATION

The warranty period and service types of products are implemented according to the following

Product Maintenance Information:

Product Type	Name	Maintenance Period (month)	Warranty Service Type
Parts	Circuit Board	12	Customer sends the product to designated site
	Battery	3	
	Charger, Electrical Parts etc.	12	
Other Items	Flash tube, modeling lamp, lamp body, lamp cover, locking device, package, etc.	NO	Without warranty