深圳市安弗特电子有限公司

AFT tech Electronic Co., Ltd. (Shenzhen)

test report

Customer name	Chengfeng	Project name	PO575 American version
Debugging frequency band	GSM4P,W2/4/5,LTE:B2/4/5/ 7/12/14/17/28A/28B/29/30 /66/71	Structural mode	FPC
Radio frequency engineer	Xie Zhixiong	construction engineer	Du Qiang
Antenna type	Loop	date	2023-7-20

地址：深圳市龙华区大浪街道华宁路40 号港深创新园B 栋3 楼 302 室　　电话：0755-27888203　　传真：0755-27888450

深圳市安弗特电子有限公司

AFT tech Electronic Co., Ltd. (Shenzhen)

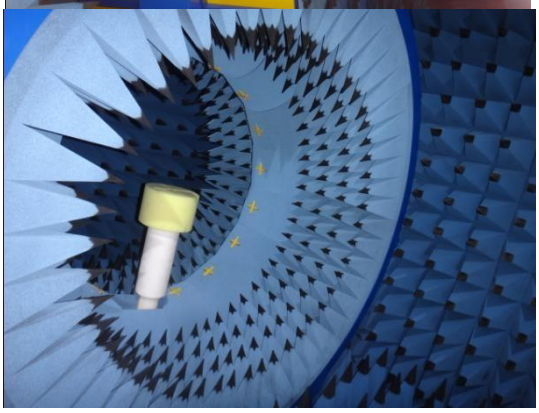

Imported from France's SATIMO company's StarLab 3D laboratory, it can accurately and quickly test the TRP, TIS, efficiency, gain, Apple chart, directional chart and other parameter data of communication terminal products such as mobile phones, tablet computers and notebooks.

- Summary of report version
- conduction data of each antenna matching circuit and passive parameters
- OTA test data of main antenna
- GPS Measured Effect
- Environmental Treatment of Whole Machine
- Summary of risk warning in debugging process

地址：深圳市龙华区大浪街道华宁路40 号港深创新园B 栋3 楼 302 室　　电话：0755-27888203　　传真：0755-27888450

Summary of report version

version	date	Content overview
V1.0	2023-1-6	shakedown test/debug
V2.0	2023-1-14	Sample repair
V3.0	2023-3-13	Trial production prototype
V4.0	2023-3-20	Mold sample
V5.0		
V6.0		

Main antenna matching circuit

Element	E1	E2	E3	E4
Value	18NH	0 ou	NC	0 ou

Our company changes the main antenna matching circuit! ! !

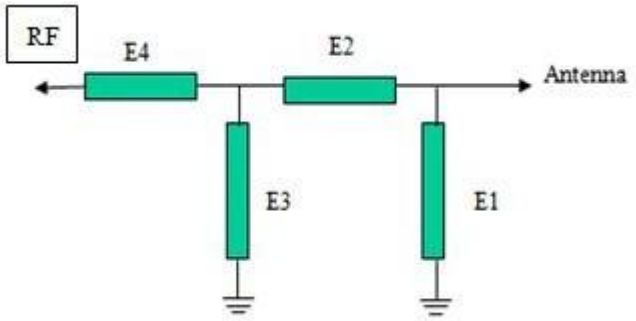

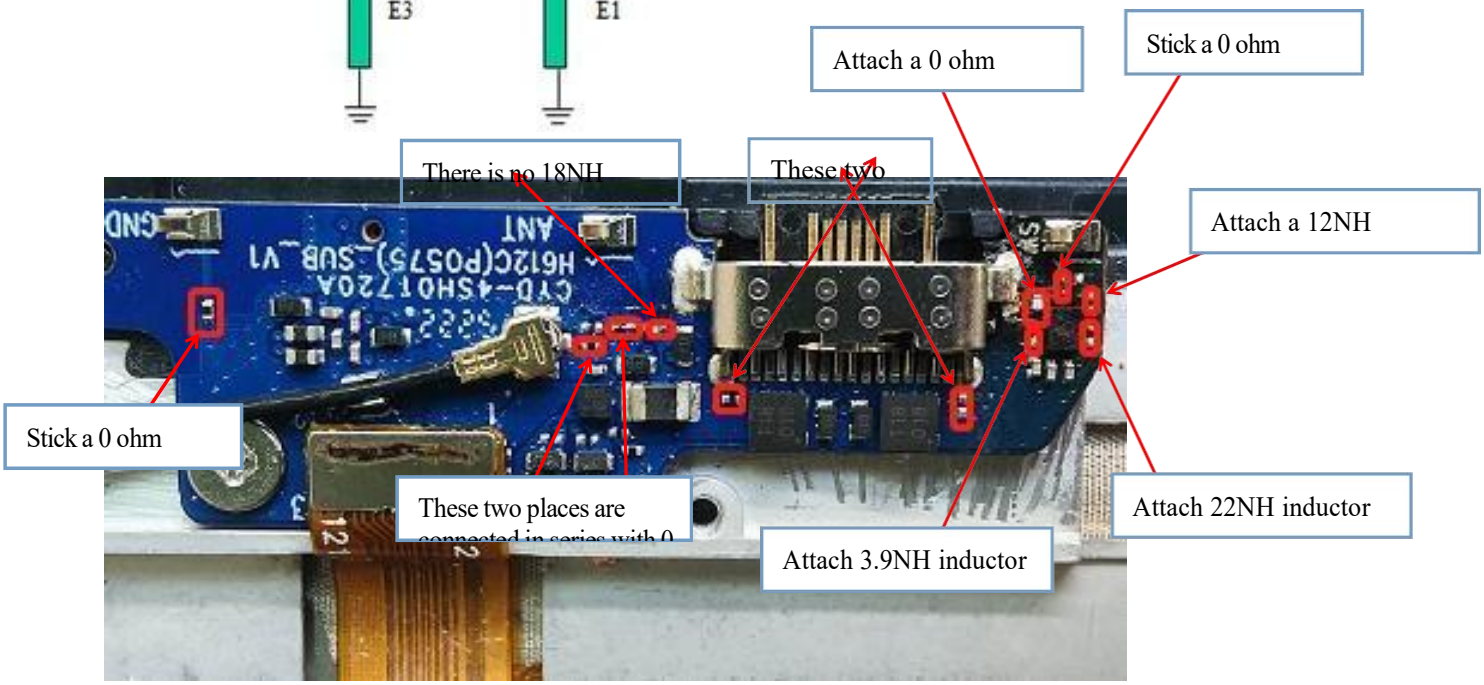

Description: antenna switch logic
1. Control GSM 900/1800/1900, W2/4, LTE-B2/4/7/30/66 at RF1.
2. GSM 850, W5 and LTE-B5 are controlled at RF2.
3. Control LTE-B12/14/17/28A/B/29 at RF3.
4. Control LTE-B71 at RF4.

Diversity antenna matching circuit

Element	E1	E2	E3	
Value	6.2NH	0 ou	NC	

Our company changes the diversity matching circuit!

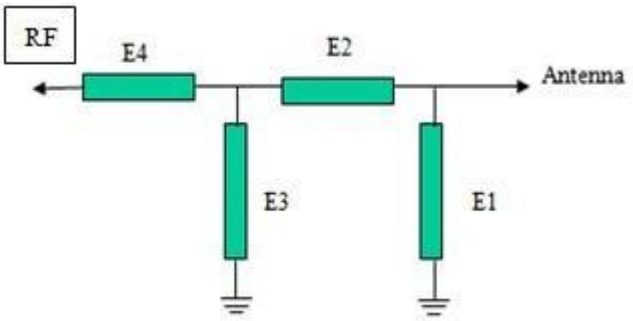

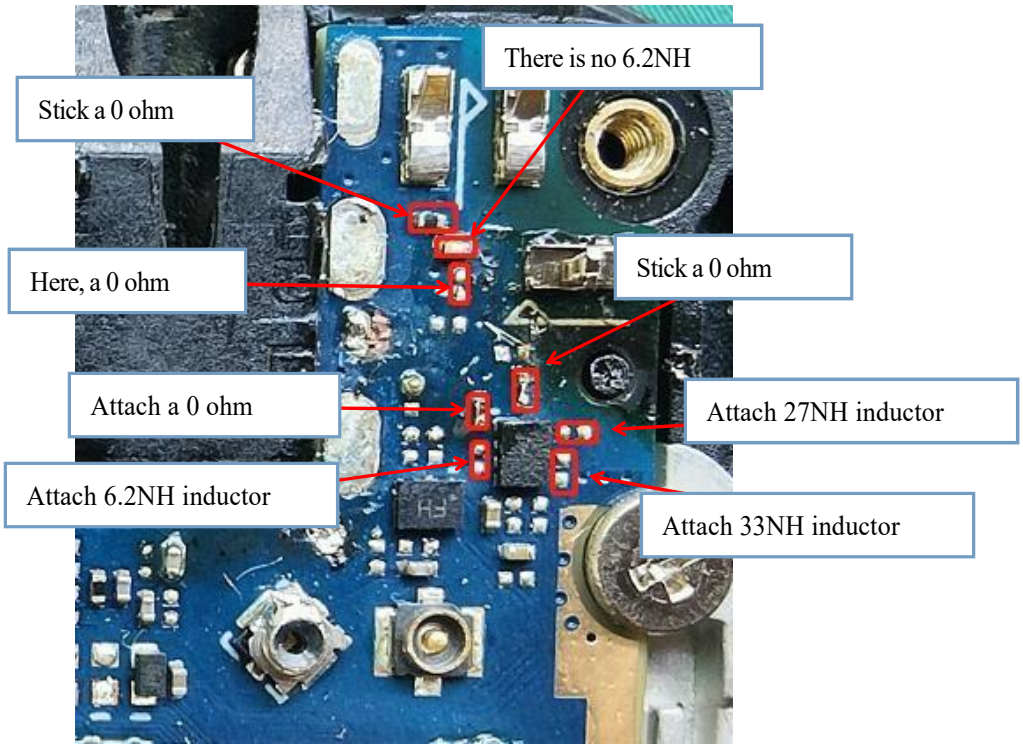

Description: antenna switch logic
1. Control GSM 900/1800/1900, W2/4, LTE-B2/4/7/30/66 at 1.RF1.
2. GSM 850, W5 and LTE-B5 are controlled at 2.RF2.
3. Control LTE-B12/14/17/28A/B/29 at 3.RF3.
4. Control LTE-B71 at 4.RF4.

Three-in-one antenna matching circuit

Element	E1	E2	E3	
Value	NC	0 ou	NC	

Our company has not changed the matching circuit of the three-in-one antenna!

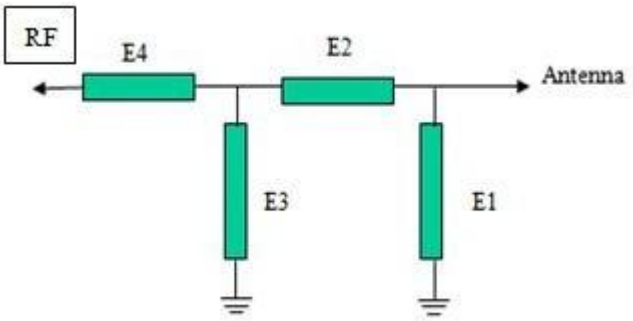

深圳市安弗特电子有限公司

AFT tech Electronic Co., Ltd. (Shenzhen)

Main board conduction data (low frequency line loss compensation 0.5dBm, medium frequency line loss compensation 0.8dBm and high frequency line loss compensation 1.0dBm)

Single principal set

Band	Channel	Power (dBm)	Sensitivity (dBm)	Band	Channel	Power (dBm)	Sensitivity (dBm)
GSM900	L	32.4		DCS1800	L	29.3	
	M	32.5			M	29.3	
	H	32.5	-110.0		H	29.2	-107.8
GSM850	L	32.6		PCS1900	L	29.5	
	M	32.7			M	29.4	
	H	32.8	-109.0		H	29.2	-107.8
W850	L	22.2		W1700	L	21.7	
	M	22.2			M	21.7	
	H	22.2			H	21.7	
W1900	L	22.0		LTE-B2（10MHZ）	L	22.5	
	M	22.0			M	22.5	
	H	22.0			H	22.5	
LTE-B4（10MHZ）	L	22.6		LTE-B5（10MHZ）	L	22.9	
	M	22.7			M	22.9	
	H	22.7			H	22.9	
LTE-B7（10MHZ）	L	23.0		LTE-B12（10MHZ）	L	22.6	
	M	23.0			M	22.8	
	H	23.0			H	22.7	
LTE-B14（10MHZ）	L			LTE-B17（10MHZ）	L	22.8	
	M	23.0			M	22.7	
	H				H	22.7	
LTE-B28A（10MHZ）	L	22.6		LTE-B28B（10MHZ）	L	22.6	
	M	22.6			M	22.6	
	H	22.6			H	22.6	
LTE-B29（10MHZ）	L			LTE-B30（10MHZ）	L	22.6	
	M				M	22.6	
	H				H	22.6	
LTE-B66（10MHZ）	L	22.6		LTE-B71（10MHZ）	L	22.6	
	M	22.6			M	22.6	
	H	22.6			H	22.7	

地址：深圳市龙华区大浪街道华宁路40 号港深创新园B 栋3 楼 302 室　　电话：0755-27888203　　传真：0755-27888450

Main antenna Fs OTA data:

Band	Channel	TRP(dBm)	TIS(dBm)	Band	Channel	TRP(dBm)	TIS(dBm)
GSM900	L	24.5		DCS1800	L	24.1	
	M	24.5			M	24.0	
	H	24.1	-100.0		H	24.0	-103.0
GSM850	L	24.0		PCS1900	L	25.1	
	M	24.3			M	25.2	
	H	24.5	-101.2		H	24.6	-102.2
W850	L	15.0		W1700	L	16.0	
	M	14.5			M	16.1	
	H	14.8	-103.0		H	16.7	-104.0
W1900	L	17.8		LTE-B2（10MHZ）	L	17.5	
	M	17.6			M	17.4	
	H	17.7	-104.5		H	16.5	-92.5
LTE-B4（10MHZ）	L	15.5		LTE-B5（10MHZ）	L	15.0	
	M	15.6			M	15.1	
	H	16.0	-92.5		H	15.2	-92.0
LTE-B7（10MHZ）	L	16.0		LTE-B12（10MHZ）	L	15.0	
	M	17.0			M	15.2	
	H	17.1	-91.2		H	15.1	-92.0
LTE-B14（10MHZ）	L	14.5		LTE-B17（10MHZ）	L	15.2	
	M	14.3			M	15.2	
	H	14.5	-92.5		H	15.0	-92.2
LTE-B28A（10MHZ）	L	15.0		LTE-B28B（10MHZ）	L	15.1	
	M	15.1			M	15.0	
	H	15.0	-92.0		H	15.2	-92.2
LTE-B30（10MHZ）	L	15.6		LTE-B66（10MHZ）	L	15.5	
	M	15.7			M	15.7	
	H	15.7	-92.7		H	16.2	-92.5
LTE-B71（10MHZ）	L	14.3					
	M	14.3					
	H	14.5	-88.7				

Description: main antenna switch logic

1. Control GSM 900/1800/1900, W2/4, LTE-B2/4/7/30/66 at 1.RF1.
2. GSM 850, W5 and LTE-B5 are controlled at 2.RF2.
3. Control LTE-B12/14/17/28A/B/29 at 3.RF3.
4. Control LTE-B71 at 4.RF4.

Diversity antenna switching logic:
1. Control GSM 900/1800/1900, W2/4, LTE-B2/4/7/30/66 at 1.RF1.
2. GSM 850, W5 and LTE-B5 are controlled at 2.RF2.
3. Control LTE-B12/14/17/28A/B/29 at 3.RF3.
4. Control LTE-B71 at 4.RF4.

Remarks: The antenna shrapnel of the motherboard small board has not been changed.

Antenna gain:

G900:-0.8dbi
G850:-0.9dbi
DCS1800:0.2dbi
PCS1900:0.3dbi
W850:-0.9dbi
W1700:0.3dbi
W1900:0.2dbi
LTE-B2:0.3dbi
LTE-B4:0.2dbi
LTE-B5:-0.9dbi
LTE-B7:0.6dbi
LTE-B12:-
1.1dbi LTE-
B13:-1.3dbi
LTE-B17:-
1.1dbi LTE-
B28:-1.1dbi
LTE-B30:-
0.9dbi LTE-
B66:0.2dbi LTE-
B71:-1.3dbi
GPS：0.8dbi
2.4G WiFi：0.6dbi
BT:0.6dbi
5G WIFI：1.0dbi
NFC:0dbi

NFC debugging:

S11 parameter:

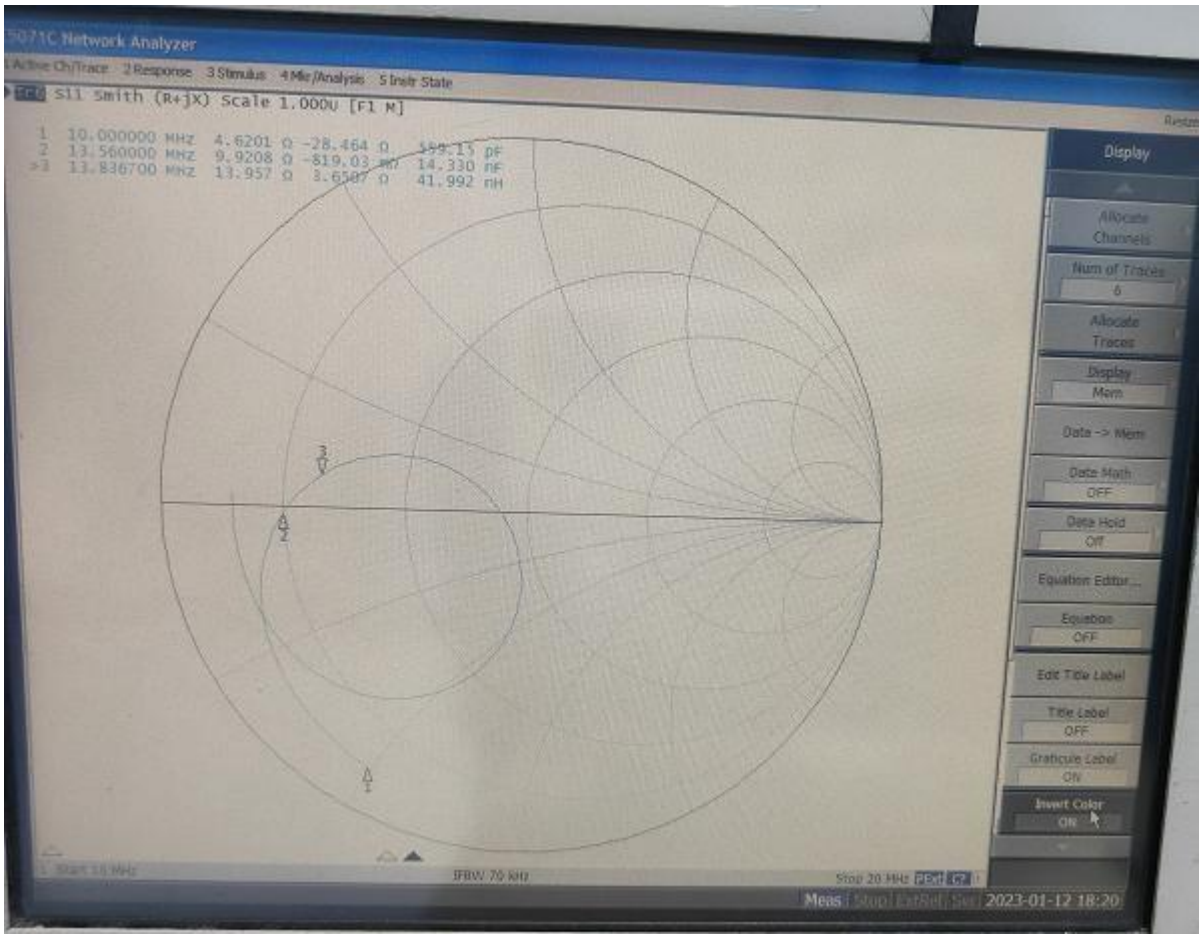

Matching changes:

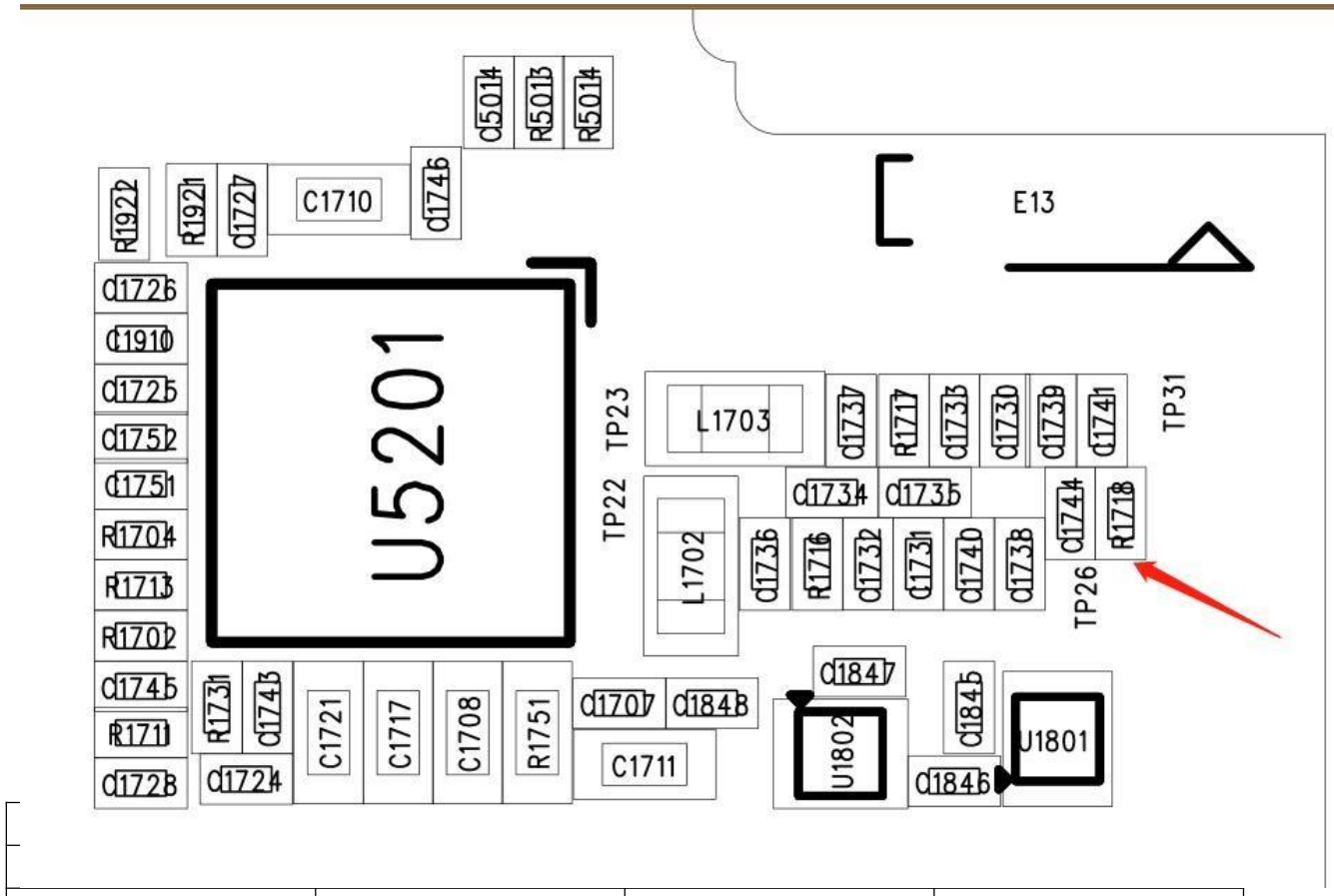

C1744	Change to 18PF.		

Reading distance of various cards:

TYPE-1	35mm	TYPE-2A	15mm
TYPE-2	25mm	TYPE-3	25mm
TYPE-4A	15mm	TYPE-4B	10mm
TYPE-5	20mm		

GPS measurement:

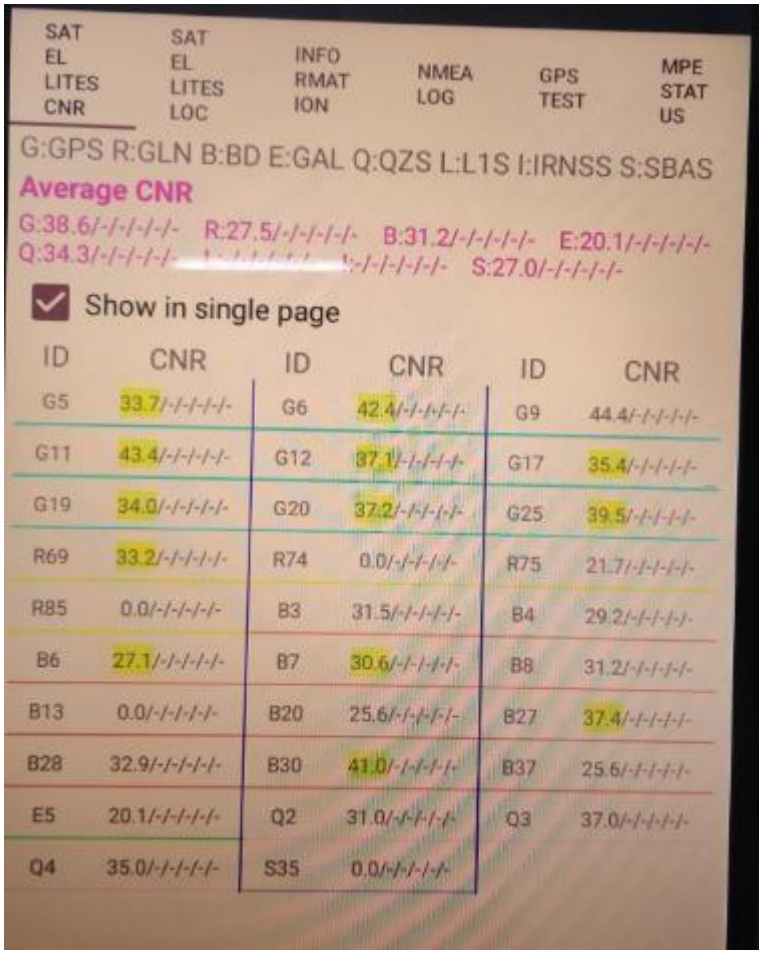

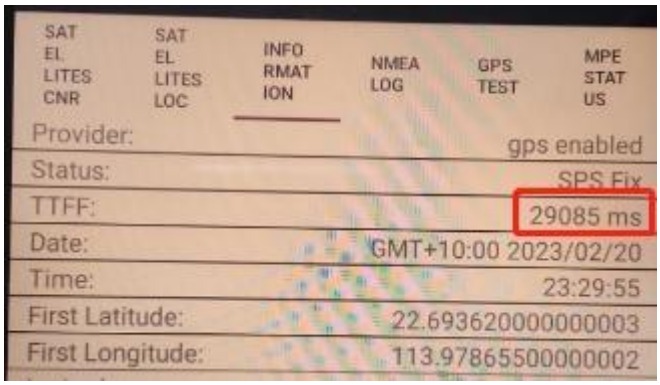

Description: the results of the company's roof test and GPS star search are shown in the above picture.

WiFi measurement:

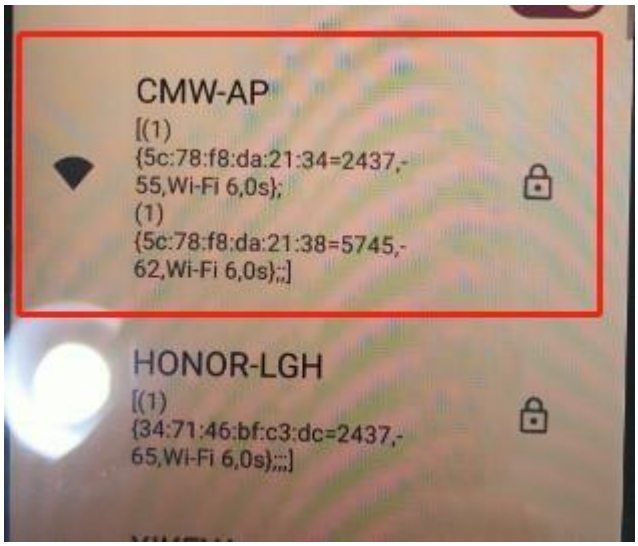

Note: The hot spot in the red box in the above picture is our WiFi, and the test distance is about 12M. The test results of two glass walls in the middle are shown in the above picture.

Environmental treatment of the whole machine:

Please carefully check whether the following environmental treatment is feasible. If you have any questions, please bring them up as soon as possible to communicate and negotiate the feasibility plan together!

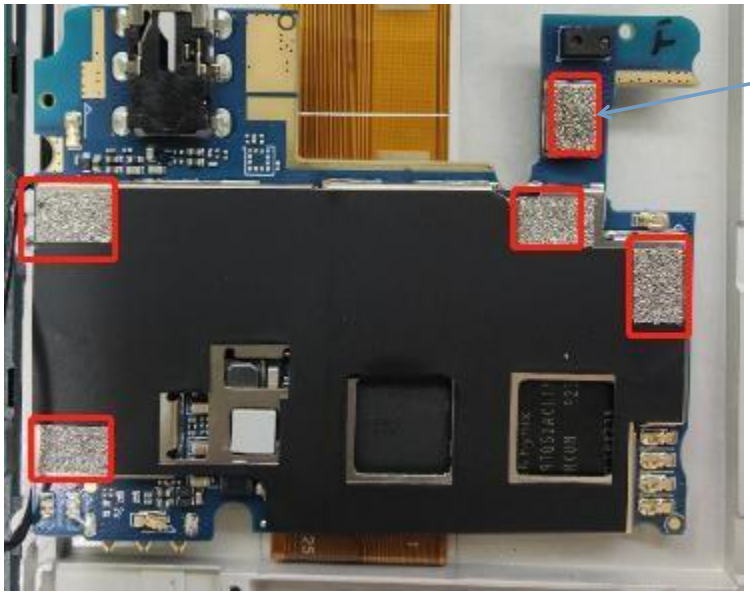

There is no conductive sponge attached to the prototype of this trial production,

In the picture, the red box of the motherboard shield is pasted with electricity.

Stick a conductive sponge on the horn and do grounding treatment, as shown in the

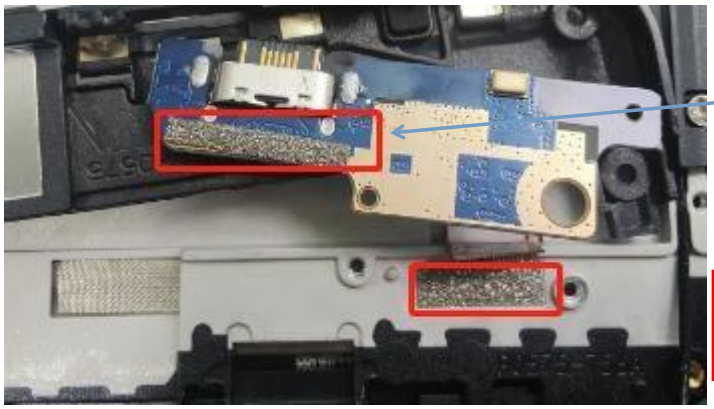

There is no conductive sponge attached to the prototype of this trial production,

A conductive sponge is attached to the exposed copper area of the

Note: For all grounding treatment, please use materials with good electrical conductivity to ensure adequate grounding and consistent antenna performance.

The environmental treatment in the screen has not been changed.

Precautions:

1. This antenna is only suitable for debugging the prototype. Material changes of the motherboard PCB or RF circuit, mobile phone accessories (such as camera, screen, speaker, motor, battery, casing technology) and other changes must be tested and verified by our company before use.
2. If you want to verify this project by a third party or a solution company, please send the prototype to our company at least one working day in advance for re-testing and then send it for testing, because the motherboard and environmental treatment will affect the antenna performance, so as to avoid delaying the project progress by sending it for two or more times!

Produced by Autodesk Education Edition products.

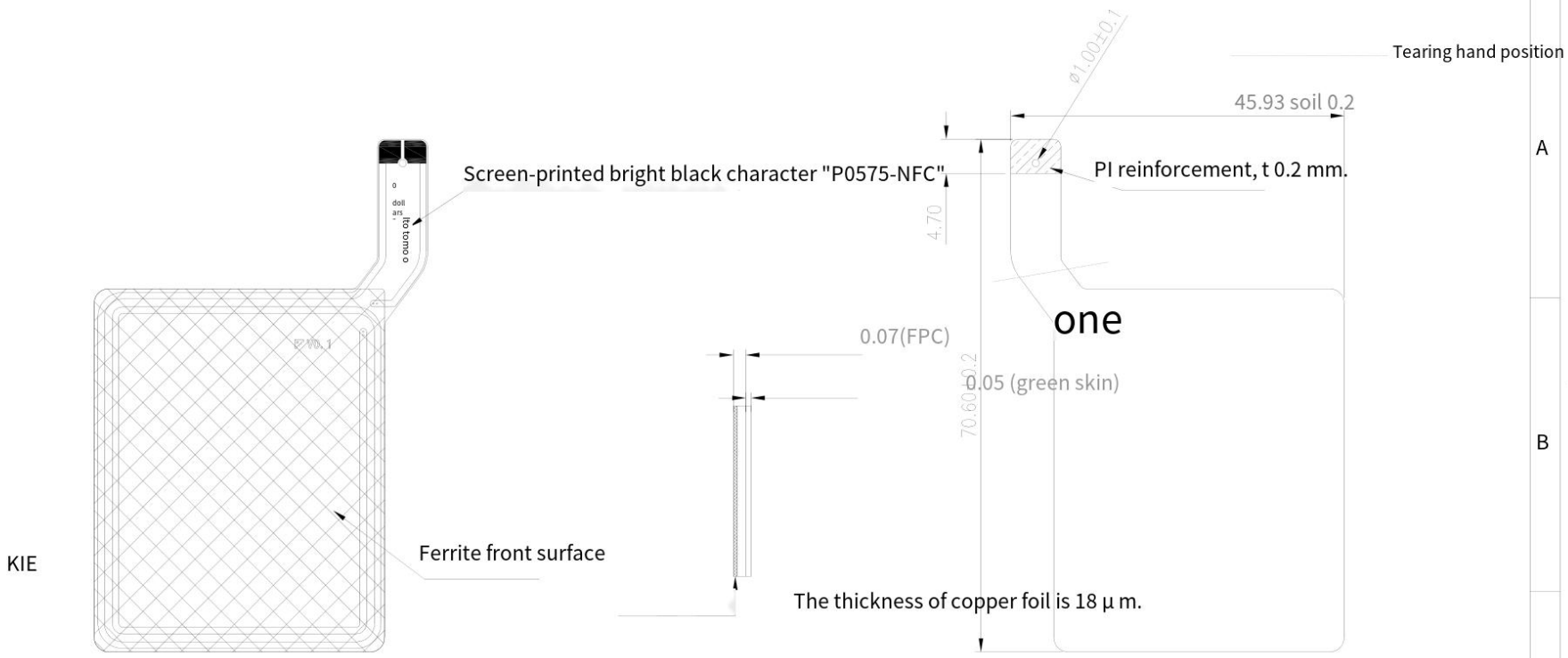

Product front matte black oil

Glue on the back of product

Note:

1、 The adhesive is 3M 467, the viscosity is more than 200MP, the shape of the adhesive is the same as that of the base material, it is covered on the back of the base material, and the adhesive is half-cut;

2、 Double-sided version of material, half-to-half base material, good flexibility;

3、 Is a gold-plated area, Is a copper foil region,

4、 After the product is covered with oil, there is no crack on the surface after 180 bending, and the flexibility is good;

5、 The surface of the gold finger is plated with gold for 1~3u ",and there should be no oxidation phenomenon. There is no crack or non-[illegible] phenomenon at the junction of copper foil after 180 bending;

6、 The precise tolerance range of wiring and holes: ±0.03mm, and the tolerance of overall dimensions is controlled within ±1mm;

7、 The dimension marked with ★ is strictly controlled, the dimension marked with * is the key dimension, and the dimension not marked is measured according to the CAD electronic drawing file 1: 1;

8、 Surface printing, specific content and location as shown in the figure;

9、 After the non-appearance is cut, the sample will be sent to our company.

P V0.1
Fvo.2
P v0.3
P V0.4
7V0.5
PV0.6
789

Shenzhen Anfute Electronics Co., Ltd.
Shanghai Leixun Electronic Technology Co., Ltd.

The third method				Models	P0575	date	2023-03-22	draft	Du Qiang	page number	4 of 5
0~10	±0.10		0.02	name of an article material code	NFC天线 P-C65-24A-G-1-4A		design	check		check and ratify	
10~20	Soil 0.12		C0. 03			structure	Du Qiang				
20~40	Soil 0.15		0.02	texture of wood							
40~	±0.20		0.04			radio frequency					
			0.02	Die surface treatment							
Please do not measure the drawings.		location		Appearance treatment			unit	mm	proportion 1:1	version	REV:A

serial number	date	Modify the content	version	remarks
one		2	three	four

five six seven eight

Ye Shen Meng Ben Han Miao sapony Jia

Autodesk 教育版产品制作 field

field 教育版产品制作 Jinkou

Produced by Autodesk Education Edition products.

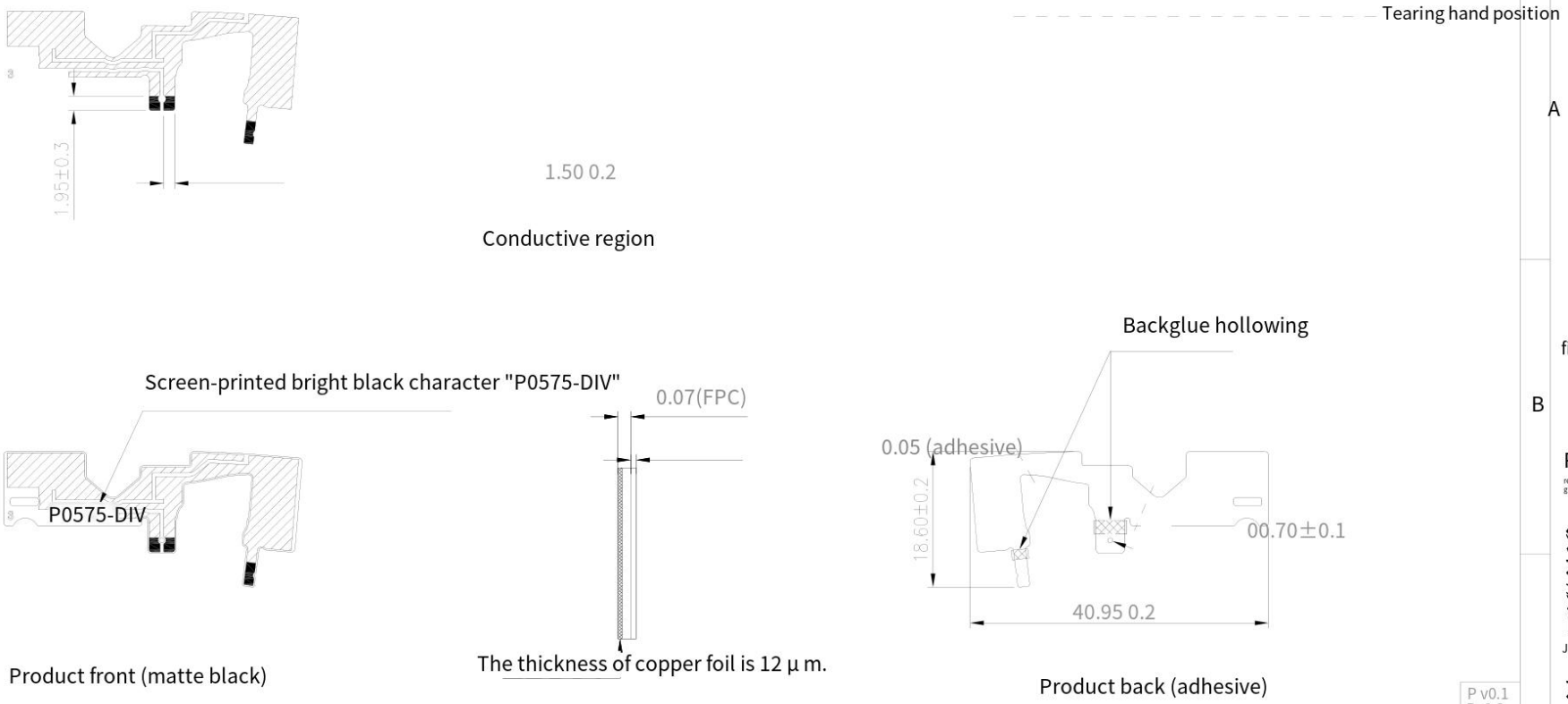

Note:

1、 The adhesive is 3M300LSE, the viscosity is over 300MP, the shape of the adhesive is the same as that of the substrate, it is covered on the back of the substrate, and the adhesive is half-cut;

2、 One-sided version of the material, half-to-half base material, good flexibility;

3、 ■ Is a gold-plated area, ▨ Is a copper foil region,

4、 After the product is covered with oil, there is no crack on the surface after 180 bending, and the flexibility is good;

5、 The surface of the gold finger is plated with gold for 1~3u ",and there is no oxidation phenomenon, and there is no crack or non-conductive phenomenon at the junction of copper foil after 180 bending;

6、 The precise tolerance range of wiring and holes: ±0.03mm, and the tolerance of overall dimensions is controlled within 0.1mm;

7、 The dimension marked with ★ is strictly controlled, the dimension marked with * is the key dimension, and the dimension not marked is measured according to the CAD electronic drawing file 1: 1;

8、 Surface printing, specific content and location as shown in the figure;

9、 After the non-appearance is cut, the sample will be sent to our company.

P v0.1
Pv0.2
F v0.3
F V0.4
y vo.5
P v0.6
FV0.7
P VO.8
F VO.9
P vo.10

Shenzhen Anfute Electronics Co., Ltd.
Shanghai Leixun Electronic Technology Co., Ltd.

The third method				Models	P0575 American version	date	2023-03-13	draft	DuQiang	page number	1 of 2
0~10	±0.10	○	0.02	name of an article	Diversity antenna	design		check		check and ratify	
10~20	Soil 0.12	◎	C0. 03	material code	P-C65-24A-F-1-3A	structure	DuQiang				
20~40	Soil 0.15	⊥	0.02	texture of wood	FPC+3M9471	radio frequency					
40~	±0.20	▱	0.04	Die surface treatment							
		⌰	0.02								
Please do not measure the drawings.	location			Appearance treatment		unit	mm	proportion	1:1	version	REV:A

serial number	date	Modify the content	version	remarks
one	2	three	four	five

Autodesk 教 版产品制 KIE field
field アPE40 remaining 教育版 Jinkou 制作
Sapony A, a drought-stricken man in Yeshenmeng.

Produced by Autodesk Education Edition products.

Tearing hand position

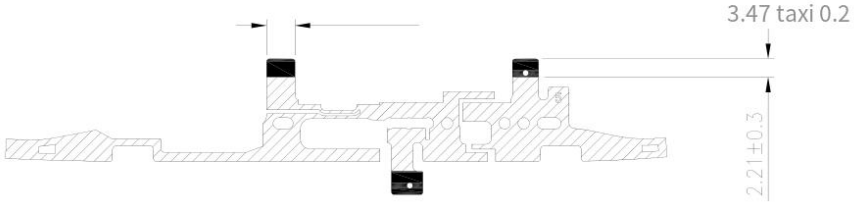

Conductive region

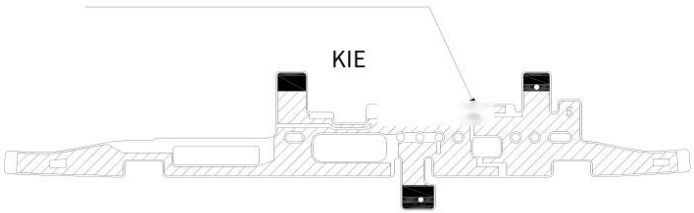

Product front (matte black)

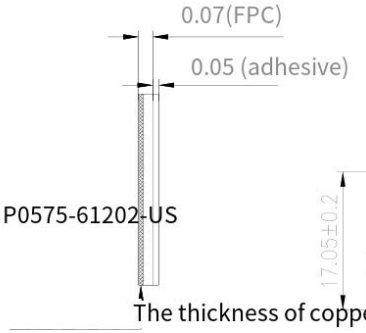

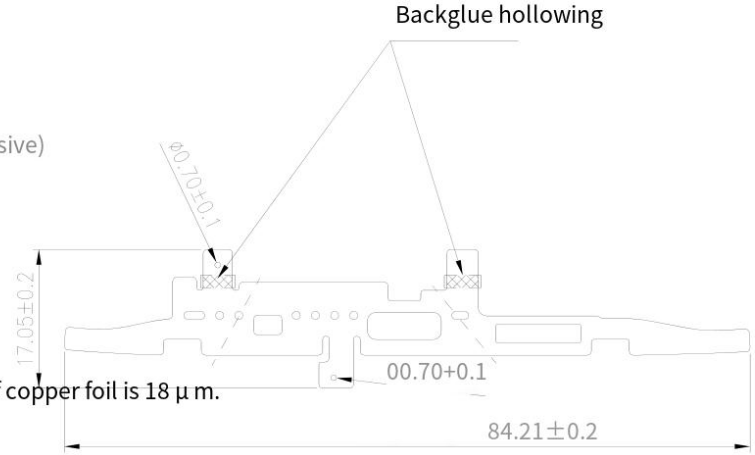

Product back (adhesive)

P v0.1
Pv0.2
F V0.3
F V0.4
y vo.5
P V0,6
P vo.7
P VO.8
F VO.9
P vo.10

Note:

1、 The adhesive is 3M300LSE, the viscosity is over 300MP, the shape of the adhesive is the same as that of the substrate, it is covered on the back of the substrate, and the adhesive is half-cut;

2、 One-sided version of the material, half-to-half base material, good flexibility;

3、 ■ Is a gold-plated area, ▨ Is a copper foil region,

4、 After the product is covered with oil, there is no crack on the surface after 180 bending, and the flexibility is good;

5、 The surface of the gold finger is plated with gold for 1~3u ",and there is no oxidation phenomenon. After 180 bending, there is no crack or non-conduction phenomenon at the junction of copper foil.

6、 The precise tolerance range of wiring and holes: ±0.03mm, and the tolerance of overall dimensions is controlled within 0.1mm;

7、 The dimension marked with ★ is strictly controlled, the dimension marked with * is the key dimension, and the dimension not marked is measured according to the CAD electronic drawing file 1: 1;

8、 Surface printing, specific content and location as shown in the figure;

9、 After the non-appearance is cut, the sample will be sent to our company.

Shenzhen Anfute Electronics Co., Ltd.
Shanghai Leixun Electronic Technology Co., Ltd.

The third method			
0~10	±0.10		0.02
10~20	Soil 0.12		C0. 03
20~40	Soil 0.15		0.02
40~	±0.20		0.04
			0.02

Models	P0575 American version	date	2023-03-22	draft	DuQiang	page number	1 of 5	
name of an article	Main antenna	design		check		check and ratify		
material code	P-C65-24A-A-1-1A	structure	DuQiang					
texture of wood	FPC+3M9471	radio frequency						
Die surface treatment								
Appearance treatment		unit	mm	proportion	1:1	version	REV:A	

Please do not measure the drawings.

serial number	date	Modify the content	version	remarks	location

Sapony A, a drought-stricken man in Yeshenmeng.

Produced by Autodesk Education Edition products.

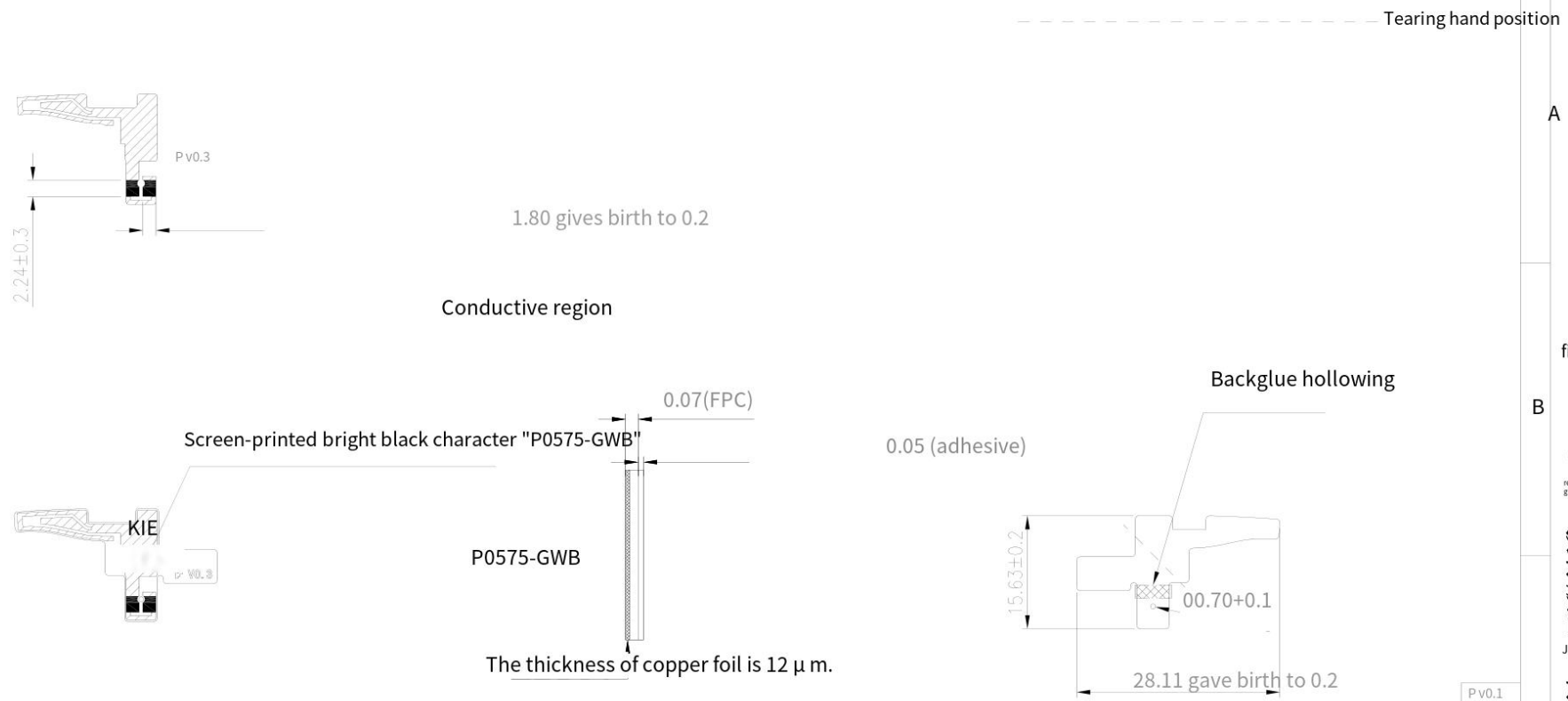

Product front (matte black)

Product back (adhesive)

Note:

1、 The adhesive is 3M300LSE, the viscosity is over 300MP, the shape of the adhesive is the same as that of the substrate, it is covered on the back of the substrate, and the adhesive is half-cut;

2、 One-sided version of the material, half-to-half base material, good flexibility;

3、 ■ Is a gold-plated area, ▨ Is a copper foil region,

4、 After the product is covered with oil, there is no crack on the surface after 180 bending, and the flexibility is good;

5、 The surface of the gold finger is plated with gold for 1~3u ",and there is no oxidation phenomenon. After 180 bending, there is no crack on non-conduction phenomenon at the junction of copper foil.

6、 The precise tolerance range of wiring and holes: ±0.03mm, and the tolerance of overall dimensions is controlled within 0.1mm;

7、 The dimension marked with ★ is strictly controlled, the dimension marked with * is the key dimension, and the dimension not marked is measured according to the CAD electronic drawing file 1: 1;

8、 Surface printing, specific content and location as shown in the figure;

9、 After the non-appearance is cut, the sample will be sent to our company.

P v0.1
Pv0.2
F v0.3
F VO.4
y vo.5
P v0.6
FV0.7
P VO.8
F VO.9
P vo.10

Shenzhen Anfute Electronics Co., Ltd.
Shanghai Leixun Electronic Technology Co., Ltd.

The third method				Models	P0575 American version	date	2023-03-22	draft	DuQiang	page number	2 of 5
0~10	±0.10	○	0.02	name of an article	Three-in-one antenna	design		check		check and ratify	
10~20	Soil 0.12	◎	C0. 03	material code	P-C65-24A-E-1-2A	structure	DuQiang				
20~40	Soil 0.15	⊥	0.02	texture of wood	FPC+3M9471						
40~	±0.20	▱	0.04	Die surface treatment		radio frequency					
		⌰	0.02								
Please do not measure the drawings.	location			Appearance treatment		unit	mm	proportion	1:1	version	REV:A

serial number	date	Modify the content	version	remarks
one				

Autodesk 教 版产品制 field
field アPE40 教育版 制作 Jinkou
Sapony A, a drought-stricken man in Yeshenmeng.