DFS Test Report

FCC ID: 2BBTG-CONNECTPRO

Report No.	:	TBR-C-202304-0231-104
Applicant	:	G-MEE LLC
Equipment Under Test (EUT)		
EUT Name	:	4G Smartphone
Model No.	:	Connect Pro
Series Model No.	:	Connect Pro L
Brand Name	:	G-Mee
Sample ID	:	202304-0231-9#1 & 202304-0231-9#2
Receipt Date	:	2023-05-15
Test Date	:	2023-05-15 to 2023-06-30
Issue Date	:	2023-06-30
Standards	:	KDB 905462 D02 UNII DFS Compliance Procedures New Rules v02 KDB 905462 D03 UNII Clients Without Radar Detection New Rules v01r02
Test Method	:	ANSI C63.10: 2013
Conclusions	:	**PASS** In the configuration tested, the EUT complied with the standards specified above

Test/Witness Engineer	:	Camille Li	Camille Li
Test/Witness Engineer	:	IVAN SU	Ivan Su
Approved& Authorized	:	Ray Lai	Ray Lai

This report details the results of the testing carried out on one sample. The results contained in this test report do not relate to other samples of the same product. The manufacturer should ensure that all products in series production are in conformity with the product sample detailed in the report.

1/F.,Building 6, Rundongsheng Industrial Zone, Longzhu, Xixiang, Bao'an District, Shenzhen, Guangdong, China
Tel: +86 75526509301 Fax: +86 75526509195

Contents

CONTENTS **2**
1. GENERAL INFORMATION ABOUT EUT **4**
1.1 Client Information 4
1.2 General Description of EUT (Equipment Under Test) 4
1.5 Test Facility 6
2. TEST SOFTWARE **6**
3. TEST EQUIPMENT **7**
4. U-NII DFS RULE REQUIREMENTS **8**
4.1. Applicability of DFS requirements 8
4.2. Test Limits and Radar Signal Parameters 9
5. CALIBRATION OF RADAR WAVEFORM **14**
5.1. Test Procedure 14
5.2. Conducted Calibration Test Setup 15
5.3. Deviation from Test Standard 15
5.4. Radar Waveform Calibration Result 15
6. U-NII DFS TESTING **16**
6.1. Test Procedure 16
6.2. Test Setup 16
7. TESTING RESULTS **17**
7.1. Summary of Test Results 17
7.2. DFS Detection Threshold 17
7.3. Channel Closing Transmission Time 18
7.4. Non-occupancy Period 21

Revision History

Report No.	Version	Description	Issued Date
TBR-C-202304-0231-104	Rev.01	Initial issue of report	2023-06-30

1. General Information about EUT

1.1 Client Information

Applicant	:	G-MEE LLC
Address	:	2803 Philadelphia Pike B # 4040 Claymont, DE 19703, USA
Manufacturer	:	Shenzhen Cheng Fong Digital-Tech Limited
Address	:	Building A, Weihua Industrial Area, Huaxing road, Dalang, Longhua, Shenzhen, China

1.2 General Description of EUT (Equipment Under Test)

EUT Name	:	4G Smartphone
Models No.	:	Connect Pro, Connect Pro L
Model Difference	:	All PCB boards and circuit diagrams are the same, the only difference is that appearance.
Operating Frequency Band	:	☒ 5250-5350MHz
		☒ 5470-5720MHz
TPC	:	☒ No ☐ Yes
Power Supply	:	Input: DC 5V
Li-ion Polymer Battery	:	DC 3.8V by 3000mAh Rechargeable Li-ion battery
Software Version	:	H612C2.CF.PO575M.4+64.ConnectPro_L.G-mee.US.13.0.V01.2023_05_12
Hardware Version	:	H612C_MB_V1
Note	:	This device was functioned as a ☐Master ☐Slave device with radar detection ☒Slave device without radar detection

Note:

(1) For a more detailed features description, please refer to the manufacturer's specifications or the User's Manual.

(2) Antenna information provided by the applicant.

Ant.	Brand	Model Name	Antenna Type	Gain (dBi)
1	N/A	N/A	PIFA	1.0

(3) Channel List:

Frequency Band	Channel No.	Frequency	Channel No.	Frequency
5260~5320 MHz **(U-NII-2A)**	52	5260 MHz	60	5300 MHz
	54	5270 MHz	62	5310MHz
	56	5280MHz	64	5320 MHz
	58	5290MHz		
For 20 MHz Bandwidth, use channel 52, 56, 60, 64. For 40 MHz Bandwidth, use channel 54, 62. For 80 MHz Bandwidth, use channel 58.				
Frequency Band	**Channel No.**	**Frequency**	**Channel No.**	**Frequency**
5500~5720 MHz **(U-NII-2C)**	100	5500 MHz	124	5620 MHz
	102	5510 MHz	126	5630 MHz
	104	5520 MHz	128	5640 MHz
	106	5530 MHz	132	5660 MHz
	108	5540 MHz	134	5670 MHz
	110	5550 MHz	136	5680 MHz
	112	5560 MHz	138	5690 MHz
	116	5580 MHz	140	5700 MHz
	118	5590 MHz	142	5710 MHz
	120	5600 MHz	144	5720 MHz
	122	5610 MHz		
For 20 MHz Bandwidth, use channel 100, 104, 108, 112, 116, 120, 124, 128, 132, 136, 140, 144 For 40 MHz Bandwidth, use channel 102, 110, 118, 126, 134, 142 For 80 MHz Bandwidth, use channel 106, 122, 138.				

1.5 Test Facility

The testing report were performed by the Shenzhen Toby Technology Co., Ltd., in their facilities located at 1/F., Building 6, Rundongsheng Industrial Zone, Longzhu, Xixiang, Bao'an District, Shenzhen, Guangdong, China. At the time of testing, the following bodies accredited the Laboratory:

CNAS (L5813)
The Laboratory has been accredited by CNAS to ISO/IEC 17025: 2017 General Requirements for the Competence of Testing and Calibration Laboratories for the competence in the field of testing. And the Registration No.: CNAS L5813.

A2LA Certificate No.: 4750.01
The laboratory has been accredited by American Association for Laboratory Accreditation(A2LA) to ISO/IEC 17025：2017 General Requirements for the Competence of Testing and Calibration Laboratories for the technical competence in the field of Electrical Testing. And the A2LA Certificate No.: 4750.01.FCC Accredited Test Site Number: 854351. Designation Number: CN1223.

IC Registration No.: (11950A)
The Laboratory has been registered by Certification and Engineering Bureau of Industry Canada for radio equipment testing. The site registration: Site# 11950A. CAB identifier: CN0056.

2. Test Software

Test Item	Test Software	Manufacturer	Version No.
RF Conducted Measurement	MTS-8310	MWRFtest	V2.0.0.0

3. Test Equipment

Antenna Conducted Emission					
Equipment	**Manufacturer**	**Model No.**	**Serial No.**	**Last Cal.**	**Cal. Due Date**
Spectrum Analyzer	Agilent	E4407B	MY45106456	Jun. 20, 2023	Jun. 19, 2024
Spectrum Analyzer	Rohde & Schwarz	FSV40-N	102197	Jun. 20, 2023	Jun. 19, 2024
MXA Signal Analyzer	KEYSIGHT	N9020B	MY60110172	Sep.01.2022	Aug. 31, 2023
MXA Signal Analyzer	Agilent	N9020A	MY47380425	Sep.01.2022	Aug. 31, 2023
Vector Signal Generator	Agilent	N5182A	MY50141294	Sep.01.2022	Aug. 31, 2023
Analog Signal Generator	Agilent	N5181A	MY48180463	Sep.01.2022	Aug. 31, 2023
Vector Signal Generator	KEYSIGHT	N5182B	MY59101429	Sep.01.2022	Aug. 31, 2023
Analog Signal Generator	KEYSIGHT	N5173B	MY61252685	Sep.01.2022	Aug. 31, 2023
RF Power Sensor	DARE!! Instruments	RadiPowerRPR3006W	17I00015SNO26	Sep.01.2022	Aug. 31, 2023
	DARE!! Instruments	RadiPowerRPR3006W	17I00015SNO29	Sep.01.2022	Aug. 31, 2023
	DARE!! Instruments	RadiPowerRPR3006W	17I00015SNO31	Sep.01.2022	Aug. 31, 2023
	DARE!! Instruments	RadiPowerRPR3006W	17I00015SNO33	Sep.01.2022	Aug. 31, 2023
RF Control Unit	Tonsced	JS0806-1	21C8060380	N/A	N/A
RF Control Unit	Tonsced	JS0806-2	21F8060439	Sep.01.2022	Aug. 31, 2023
Band Reject Filter Group	Tonsced	JS0806-F	21D8060414	Jun. 20, 2023	Jun. 19, 2024
Power Control Box	Tonsced	JS0806-4ADC	21C8060387	N/A	N/A
Wideband Radio Comunication Tester	Rohde & Schwarz	CMW500	144382	Sep.01.2022	Aug. 31, 2023
Universal Radio Communication Tester	Rohde&Schwarz	CMW500	168796	Feb. 23, 2023	Feb.22, 2024
Temperature and Humidity Chamber	ZhengHang	ZH-QTH-1500	ZH2107264	Jun. 20, 2023	Jun. 19, 2024

4. U-NII DFS Rule Requirements

4.1. Applicability of DFS requirements

The manufacturer shall state whether the UUT is capable of operating as a Master and/or a Client. If the UUT is capable of operating in more than one operating mode then each operating mode shall be tested separately. See tables 1 and 2 for the applicability of DFS requirements for each of the operational modes.

Table 3: Applicability of DFS requirements prior to use a channel

Requirement	Operational Mode		
	☐Master	☒Client without radar detection	☐Client with radar detection
Non-Occupancy Period	✓	Not required	✓
DFS Detection Threshold	✓	Not required	✓
Channel Availability Check Time	✓	Not required	Not required
Uniform Spreading	✓	Not required	Not required
U-NII Detection Bandwidth	✓	Not required	✓

Table 4: Applicability of DFS requirements during normal operation

Requirement	Operational Mode		
	☐Master	☒Client without radar detection	☐Client with radar detection
DFS Detection Threshold	✓	Not required	✓
Channel Closing Transmission Time	✓	✓	✓
Channel Move Time	✓	✓	✓
U-NII Detection Bandwidth	✓	Not required	✓

Additional requirements for devices with multiple bandwidth modes	☐Master Device or Client with Radar Detection	☒Client without Detection
Detection Bandwidth and Statistical Performance Check	All BW modes must be tested	Not required
Channel Move Time and Channel Closing Transmission Time	Test using widest BW mode available	Test using widest BW mode available
All other tests	Any single BW mode	Not required
Note: Frequencies selected for statistical performance check (section 7.8.4) should include several frequencies within the radar detection bandwidth and frequencies near the edge of the radar detection bandwidth. For 802.11 devices it is suggested to select frequencies in each of the bonded 20MHz channels and the channel center frequency.		

4.2. Test Limits and Radar Signal Parameters

DETECTION THRESHOLD VALUES

Table 5: DFS Detection Thresholds for Master Devices and Client Devices with Radar Detection.

Maximum Transmit Power	Value (See Notes 1 and 2)
EIRP≥ 200 milliwatt	-64 Bm
EIRP < 200 milliwatt and Power pectral density < 10 dBm/MHz	-62 dBm
EIRP < 200 milliwatt that do not meet the power spectral density requirement	-64 dBm

Note 1: This is the level at the input of the receiver assuming a 0 dBi receive antenna.

Note 2: Throughout these test procedures an additional 1 dB has been added to the amplitude of the test transmission waveforms to account for variations in measurement equipment. This will ensure that the test signal is at or above the detection threshold level to trigger a DFS response.

Note3: EIRP is based on the highest antenna gain. For MIMO devices refer to KDB Publication 662911 D01.

Table 6: DFS Response Requirement Values

Parameter	Value
Non-occupancy period	Minimum 30 minutes
Channel Availability Check Time	60 seconds
Channel Move Time	10 seconds See Note 1.
Channel Closing Transmission Time	200 milliseconds + an aggregate of 60 milliseconds over remaining 10 second period. See Notes 1 and 2.
U-NII Detection Bandwidth	Minimum 100% of the UNII 99% transmission power bandwidth. See Note 3.

Note 1: Channel Move Time and the Channel Closing Transmission Time should be performed with Radar Type 0. The measurement timing begins at the end of the Radar Type 0 burst.

Note 2: The Channel Closing Transmission Time is comprised of 200 milliseconds starting at the beginning of the Channel Move Time plus any additional intermittent control signals required to facilitate a Channel move (an aggregate of 60 milliseconds) during the remainder of the 10 second period. The aggregate duration of control signals will not count quiet periods in between transmissions.

Note 3: During the U-NII Detection Bandwidth detection test, radar type 0 should be used. For each frequency step the minimum percentage of detection is 90 percent. Measurements are performed with no data traffic.

PARAMETERS OF DFS TEST SIGNALS

Step intervals of 0.1 microsecond for Pulse Width, 1 microsecond for PRI, 1 MHz for chirp width and 1 for the number of pulses will be utilized for the random determination of specific test waveforms.

Table 7: Short Pulse Radar Test Waveforms.

Radar Type	Pulse Width (µsec)	PRI (µsec)	Number of Pulses	Minimum Percentage of Successful Detection	Minimum Number of Trials
0	1	1428	18	See Note 1	See Note 1
1	1	Test A: 15 unique PRI values randomly selected from the list of 23 PRI values in Table 5a	$\text{Roundup}\left\{\left(\frac{1}{360}\right)\cdot\left(\frac{19\cdot 10^6}{\text{PRI}_{\mu\text{sec}}}\right)\right\}$	60%	30
		Test B: 15 unique PRI values randomly selected within the range of 518-3066 µsec, with a minimum increment of 1 µsec, excluding PRI values selected in Test A			
2	1-5	150-230	23-29	60%	30
3	6-10	200-500	16-18	60%	30
4	11-20	200-500	12-16	60%	30
Aggregate (Radar Types 1-4)				80%	120
Note 1: Short Pulse Radar Type 0 should be used for the detection bandwidth test, channel move time, and channel closing time tests.					

A minimum of 30 unique waveforms are required for each of the Short Pulse Radar Types 2 through 4. If more than 30 waveforms are used for Short Pulse Radar Types 2 through 4, then each additional waveform must also be unique and not repeated from the previous waveforms. If more than 30 waveforms are used for Short Pulse Radar Type 1, then each additional waveform is generated with Test B and must also be unique and not repeated from the previous waveforms in Tests A or B.

Table 7a: Pulse Repetition Intervals Values for Test A.

Pulse Repetition Frequency Number	Pulse Repetition Frequency (Pulses Per Second)	Pulse Repetition Interval (Microseconds)
1	1930.5	518
2	1858.7	538
3	1792.1	558
4	1730.1	578
5	1672.2	598
6	1618.1	618
7	1567.4	638
8	1519.8	658
9	1474.9	678
10	1432.7	698
11	1392.8	718
12	1355	738
13	1319.3	758
14	1285.3	778
15	1253.1	798
16	1222.5	818
17	1193.3	838
18	1165.6	858
19	1139	878
20	1113.6	898
21	1089.3	918
22	1066.1	938
23	326.2	3066

Table 8: Long Pulse Radar Test Waveform

Radar Type	Pulse Width (μsec)	Chirp Width (MHz)	PRI (μsec)	Number of Pulses per Burst	Number of Bursts	Minimum Percentage of Successful Detection	Minimum Number of Trials
5	50-100	5-20	1000-2000	1-3	8-20	80%	30

The parameters for this waveform are randomly chosen（The center frequency for each of the 30 trials of the Bin 5 radar shall be randomly selected within 80% of the Occupied Bandwidth.）Thirty unique waveforms are required for the Long Pulse Radar Type waveforms. If more than 30 waveforms are used for the Long Pulse Radar Type waveforms, then each additional waveform must also be unique and not repeated from the previous waveforms.

Table 9: Frequency Hopping Radar Test Waveform

Radar Type	Pulse Width (μsec)	Chirp Width (MHz)	PRI (μsec)	Number of Pulses per Burst	Number of Bursts	Minimum Percentage of Successful Detection	Minimum Number of Trials
6	1	333	9	0.333	300	70%	30

5. Calibration of Radar Waveform

5.1. Test Procedure

1. A 50 ohm load is connected in place of the spectrum analyzer, and the spectrum analyzer is connected in place of the master device and the signal generator is set to CW mode. The amplitude of the signal generator is adjusted to yield a level of –62 dBm as measured on the spectrum analyzer.
2. Without changing any of the instrument settings, the spectrum analyer is reconnected to the Common port of the Spectrum Analyzer Combiner/Divider. Measure the amplitude and calculate the difference from –62 dBm. Adjust the Reference Level Offset of the spectrum analyzer to this difference.
3. The spectrum analyzer displays the level of the signal generator as received at the antenna ports of the Master Device. The interference detection threshold may be varied from the calibrated value of –62 dBm and the spectrum analyzer will still indicate the level as received by the Master Device.
4. Set the signal generator to produce a radar waveform, trigger a burst manually and measure the level on the spectrum analyzer. Readjust the amplitude of the signal generator as required so that the peak level of the waveform is at a displayed level equal to the required or desired interference detection threshold. Separate signal generator amplitude settings are determined as required for each radar type.

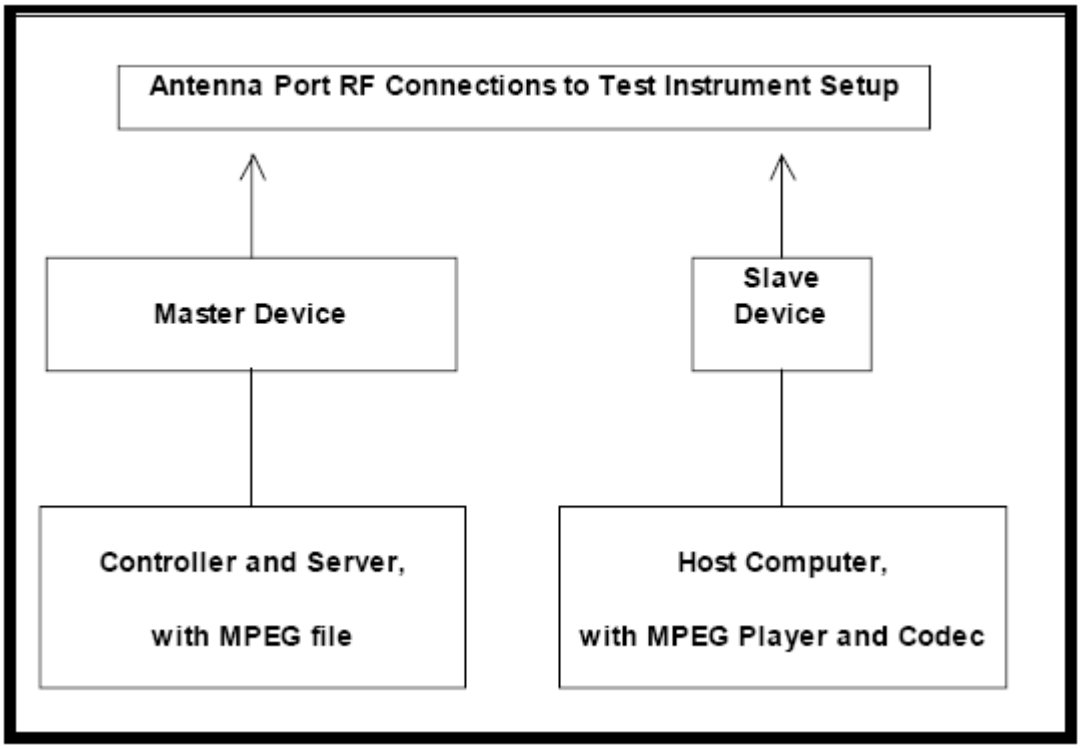

5.2. Conducted Calibration Test Setup

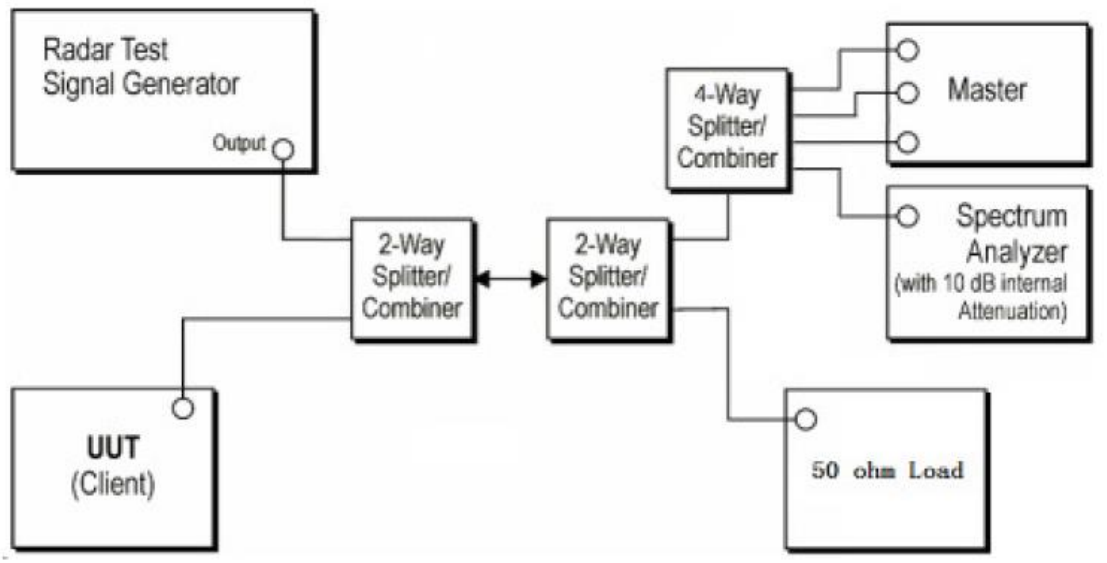

5.3. Deviation from Test Standard

No Deviation

5.4. Radar Waveform Calibration Result

6. U-NII DFS Testing

6.1. Test Procedure

1. Master device and client device are set up by conduction method as the following configuration.
2. The client device is connected to notebook and to access a IP address on wireless connection with the master device.
3. Then the master device is connected to another notebook to access a IP address.
4. Finally, let the two IP addresses run traffic with each other through the Run flow software "Lan test" to reach 17% channel loading as below:

6.2. Test Setup

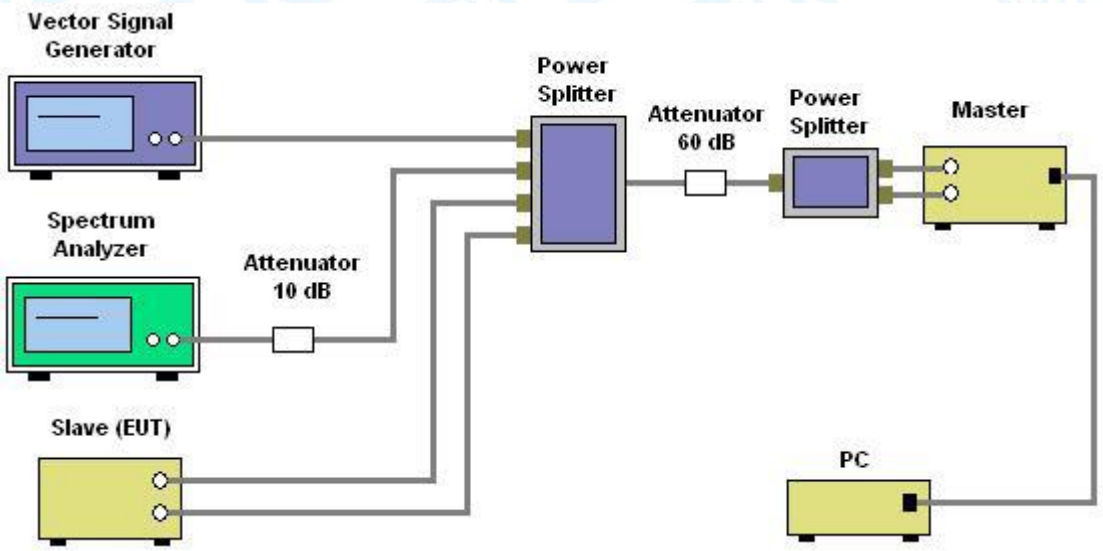

7. Testing Results

7.1. Summary of Test Results

Clause	Test Parameter	Remarks	Pass/Fail
15.407	DFS Detection Threshold	No Applicable	N/A
15.407	Channel Availability Check Time	Not Applicable	N/A
15.407	Channel Move Time	**Applicable**	**Pass**
15.407	Channel Closing Transmission Time	**Applicable**	**Pass**
15.407	Non- Occupancy Period	**Applicable**	**Pass**
15.407	Uniform Spreading	Not Applicable	N/A
15.407	U-NII Detection Bandwidth	Not Applicable	N/A
Test Mode			
The EUT is slave equipment, it need a master device when testing. Master with injection at the Master. (Radar Test Waveforms are injected into the Master)			

7.2. DFS Detection Threshold

Calibration:
The EUT is slave equipment and it with a max gain is **1.0** dBi.
For a detection threshold level of -62dBm and the master **(Brand: ZTE, Model: ZXHN H389A, FCC ID: Q78-ZXHNH389A)** antenna gain is 3 dBi, required detection threshold is -59.00dBm= (-62+3.0)dBm.
Note: Maximum Transmit Power is less than 200 milliwatt in this report, so detection threshold level is -62dBm.

7.3. Channel Closing Transmission Time

TestMode	Channel	CCTT[ms]	Limit[ms]	CMT[ms]	Limit[ms]	Verdict
11AC80SISO	5290	200+13	200+60	1217.8	10000	PASS
11AC80SISO	5530	200+9.1	200+60	1371.2	10000	PASS

TestMode	Channel	Radar Type	Result	Limit[dbm]	Verdict
11AC80SISO	5290	Type0	-64.32	-64.00	PASS
11AC80SISO	5530	Type0	-64.07	-64.00	PASS

TX (11ac 80MHz Mode)_5290MHz Radar Signal 0
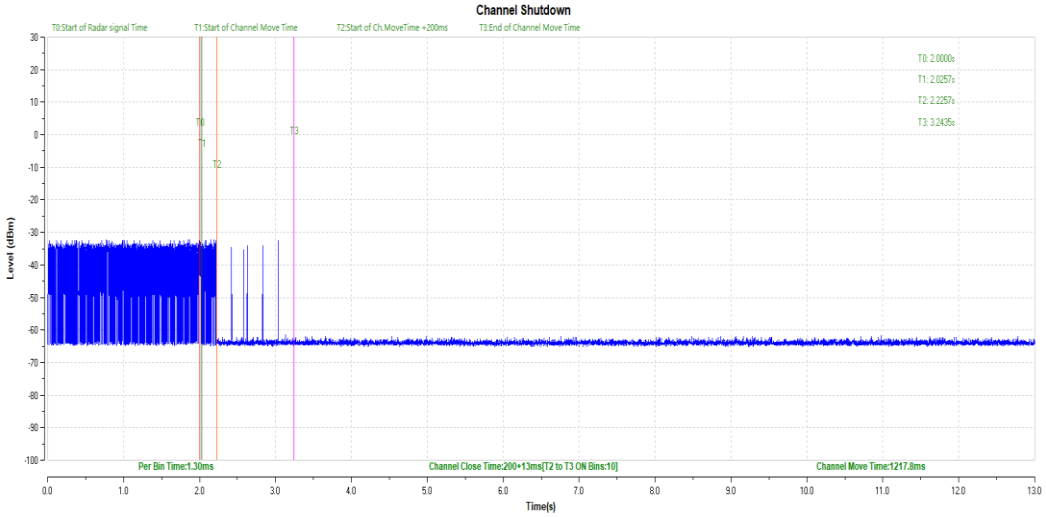
Cablibration Plots
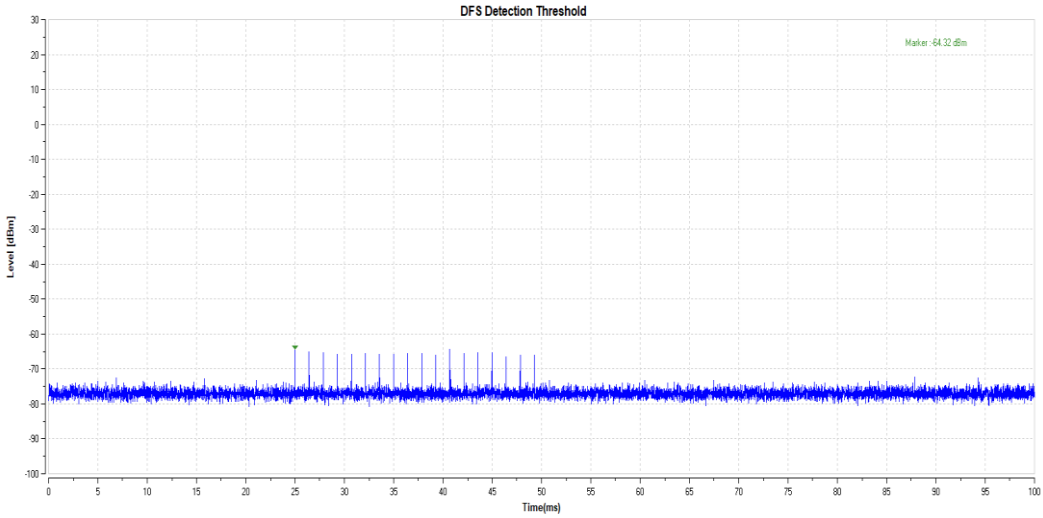

TX (11ac 80MHz Mode)_5530MHz Radar Signal 0
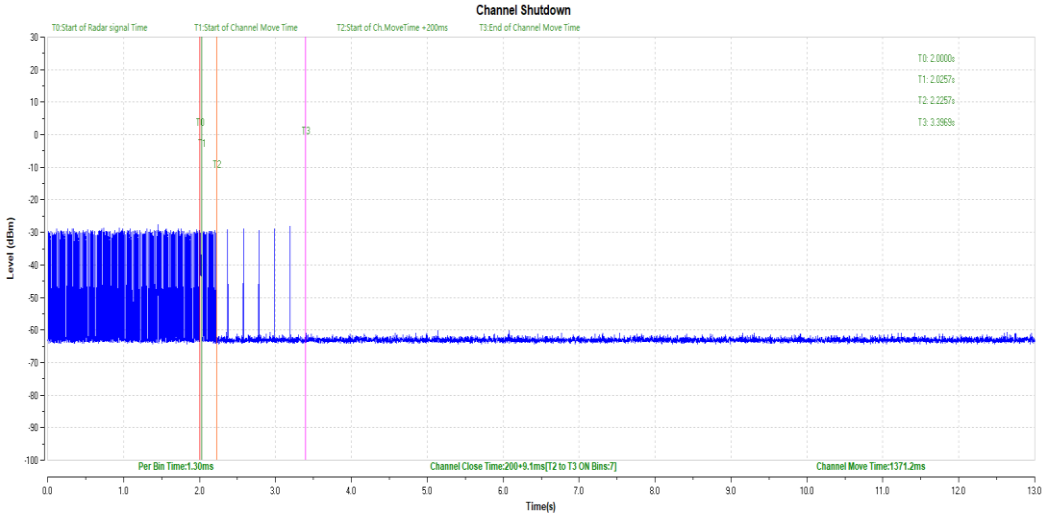
Cablibration Plots
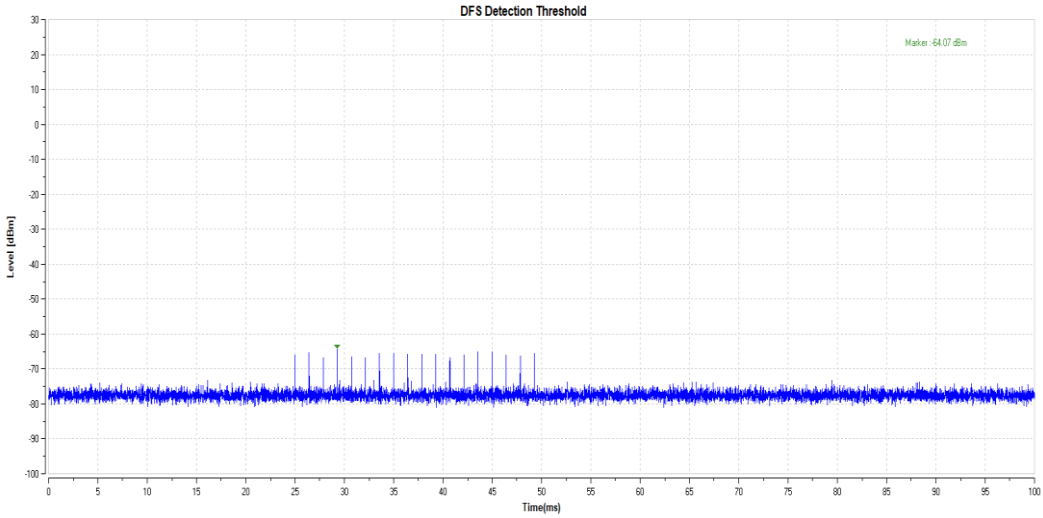

7.4. Non-occupancy Period

During the 30 minutes observation time, UUT did not make any transmissions on a channel after a radar signal was detected on that channel by either the Channel Availability Check or the In-Service Monitoring.

Non-Occupancy Period Result				
Modulation Mode	**Freq. (MHz)**	**Non-Occupancy Period**		
		Measured	**Limit**	**Result**
acVHT80	5290	>30min	30min	Complied
	5530	>30min	30min	Complied

11ac 80MHz Mode 5290MHz

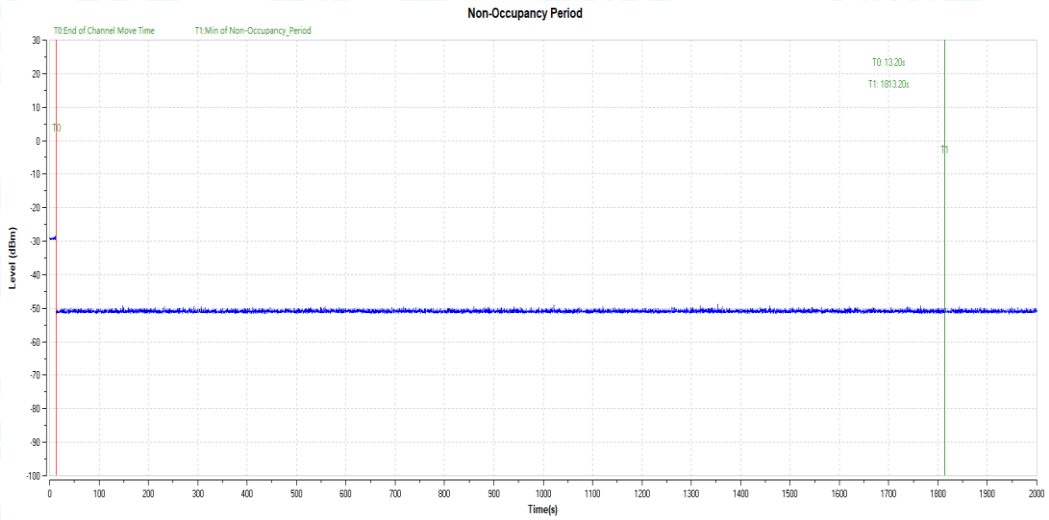

11ac 80MHz Mode 5530MHz

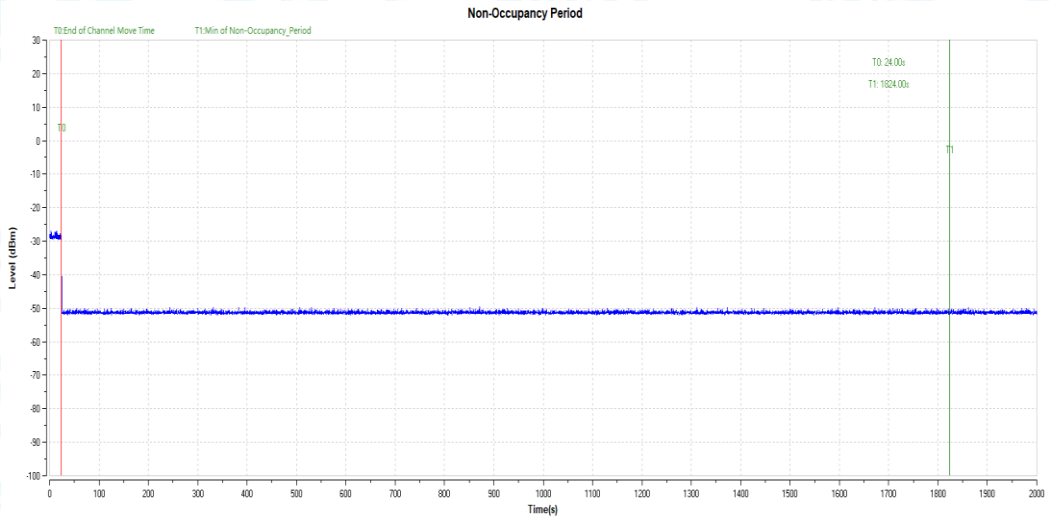

-----END OF REPORT------