FCC Radio Test Report

FCC ID: 2BBTG-CONNECTPRO

Original Grant

Report No.	:	TBR-C-202304-0231-106
Applicant	:	G-MEE LLC
Equipment Under Test (EUT)		
EUT Name	:	4G Smartphone
Model No.	:	Connect Pro
Series Model No.	:	Connect Pro L
Brand Name	:	G-Mee
Sample ID	:	202304-0231-9#1 & 202304-0231-9#2
Receipt Date	:	2023-05-15
Test Date	:	2023-05-15 to 2023-06-30
Issue Date	:	2023-06-30
Standards	:	47 CFR Part 2, 22(H), 24(E), 27
Test Method	:	ANSI C63.26 2015
Conclusions	:	**PASS**
		In the configuration tested, the EUT complied with the standards specified above,
		The EUT technically complies with the FCC requirements
Test/Witness Engineer	:	Camille Li
Engineer Supervisor	:	Ivan Su
Engineer Manager	:	Ray Lai

This report details the results of the testing carried out on one sample. The results contained in this test report do not relate to other samples of the same product. The manufacturer should ensure that all products in series production are in conformity with the product sample detailed in the report.

1/F.,Building 6, Rundongsheng Industrial Zone, Longzhu, Xixiang, Bao'an District, Shenzhen, Guangdong, China
Tel: +86 75526509301 Fax: +86 75526509195

Contents

CONTENTS **2**
1. GENERAL INFORMATION ABOUT EUT **5**
1.1 Client Information 5
1.2 General Description of EUT (Equipment Under Test) 5
1.3 Block Diagram Showing the Configuration of System Tested 10
1.4 Description of Support Units 10
1.5 Measurement Uncertainty 11
1.6 Test Facility 12
2. TEST SUMMARY **13**
3. TEST EQUIPMENT **15**
4. CONDUCTED RF OUTPUT POWER **17**
4.1 Test Standard and Limit 17
4.2 Test Setup 17
4.3 Test Procedure 17
4.4 EUT Operating Condition 17
4.5 Deviation From Test Standard 17
4.6 Test Data 17
5. PEAK-AVERAGE RATIO **18**
5.1 Test Standard and Limit 18
5.2 Test Setup 18
5.3 Test Procedure 18
5.4 EUT Operating Condition 18
5.5 Deviation From Test Standard 18
5.6 Test Data 18
6. OCCUPIED BANDWIDTH **19**
6.1 Test Standard and Limit 19
6.2 Test Setup 19
6.3 Test Procedure 19
6.4 EUT Operating Condition 20
6.5 Deviation From Test Standard 20
6.6 Test Data 20
7. OUT OF BAND EMISSION AT ANTENNA TERMINALS **21**
7.1 Test Standard and Limit 21

7.2 Test Setup 21
7.3 Test Procedure 22
7.4 EUT Operating Condition 22
7.5 Deviation From Test Standard 22
7.6 Test Data 22
8. BAND EDGE TEST 23
8.1 Test Standard and Limit 23
8.2 Test Setup 23
8.3 Test Procedure 23
8.4 EUT Operating Condition 24
8.5 Deviation From Test Standard 24
8.6 Test Data 24
9. RADIATED OUTPUT POWER 25
9.1 Test Standard and Limit 25
9.2 Test Setup 25
9.3 Test Procedure 26
9.4 EUT Operating Condition 26
9.5 Deviation From Test Standard 26
9.6 Test Data 26
10. RADIATED OUT BAND OF EMISSIONS 27
10.1 Test Standard and Limit 27
10.2 Test Setup 27
10.3 Test Procedure 27
10.4 EUT Operating Condition 28
10.5 Deviation From Test Standard 28
10.6 Test Data 28
11. FREQUENCY STABILITY 29
11.1 Test Standard and Limit 29
11.2 Test Setup 29
11.3 Test Procedure 30
11.4 EUT Operating Condition 30
11.5 Deviation From Test Standard 30
11.6 Test Data 30
ATTACHMENT A--RADIATED OUTPUT POWER 31
ATTACHMENT B--RADIATED OUT BAND OF EMISSIONS 50

Revision History

Report No.	Version	Description	Issued Date
TBR-C-202304-0231-106	Rev.01	Initial issue of report	2023-06-30

1. General Information about EUT

1.1 Client Information

Applicant	:	G-MEE LLC
Address	:	2803 Philadelphia Pike B # 4040 Claymont, DE 19703, USA
Manufacturer	:	Shenzhen Cheng Fong Digital-Tech Limited
Address	:	Building A, Weihua Industrial Area, Huaxing road, Dalang, Longhua, Shenzhen, China

1.2 General Description of EUT (Equipment Under Test)

EUT Name	:	4G Smartphone	
HVIN/Model	:	Connect Pro, Connect Pro L	
Model Different	:	All PCB boards and circuit diagrams are the same, the only difference is that appearance.	
Product Description	:	Frequency Bands: LTE Band 2: TX: 1850MHz-1910MHz, RX: 1930MHz-1990MHz LTE Band 4: TX: 1710MHz-1755MHz, RX: 2110MHz-2155MHz LTE Band 5: TX: 824MHz-849MHz, RX: 869MHz-894MHz LTE Band 7: TX: 2500MHz -2570MHz, RX: 2620MHz-2690MHz LTE Band 12: TX: 699MHz -716MHz, RX: 729MHz-746MHz LTE Band 17: TX: 704MHz -716MHz, RX: 734MHz-746MHz LTE Band 30: TX: 2305MHz -2315MHz, RX: 2350MHz-2360MHz LTE Band 66: TX: 1710MHz -1780MHz, RX: 2110MHz-2200MHz LTE Band 71: TX: 663MHz -698MHz, RX: 617MHz-652MHz	
		Antenna Gain:	LTE Band 2: 0.3dBi Loop Antenna LTE Band 4: 0.2dBi Loop Antenna LTE Band 5: -0.9dBi Loop Antenna LTE Band 7: 0.6dBi Loop Antenna LTE Band 12: -1.1dBi Loop Antenna LTE Band 17: -1.1dBi Loop Antenna LTE Band 30: -0.9dBi Loop Antenna LTE Band 66: 0.2dBi Loop Antenna LTE Band 71: -1.3dBi Loop Antenna
		Modulation Type:	QPSK, 16QAM

		Bandwidth:	LTE Band 2 :1.4MHz/3MHz/5MHz/10MHz/15MHz/20MHz LTE Band 4 :1.4MHz/3MHz/5MHz/10MHz/15MHz/20MHz LTE Band 5 :1.4MHz/3MHz/5MHz/10MHz LTE Band 7 :5MHz/10MHz/15MHz/20MHz LTE Band 12 :1.4MHz/3MHz/5MHz/10MHz LTE Band 17 :5MHz/10MHz LTE Band 30 : 5MHz/10MHz LTE Band 66 :1.4MHz/3MHz/5MHz/10MHz/15MHz/20MHz LTE Band 71: 5MHz/10MHz/15MHz/20MHz
Power Rating	:	Input: DC 5V	
Li-ion Polymer Battery	:	DC 3.8V by 3000mAh Rechargeable Li-ion battery	
Software Version	:	H612C2.CF.PO575M.4+64.ConnectPro_L.G-mee.US.13.0.V01.2023_05_12	
Hardware Version	:	H612C_MB_V1	
Remark	:	The antenna gain provided by the applicant, the verified for the RF conduction test provided by TOBY test lab.	

Note:

(1) For a more detailed features description, please refer to the manufacturer's specifications or the User's Manual.

(2) Channel List

Test mode:	Nominal Bandwidth (MHz)	RF Channel		
		Low (L)	Middle (M)	High (H)
		MHz	MHz	MHz
LTE Band 2	1.4	1850.7	1880.0	1909.3
	3	1851.5	1880.0	1908.5
	5	1852.5	1880.0	1907.5
	10	1855.0	1880.0	1905.0
	15	1857.5	1880.0	1902.5
	20	1860.0	1880.0	1900.0

Test mode:	Nominal Bandwidth (MHz)	RF Channel		
		Low (L)	Middle (M)	High (H)
		MHz	MHz	MHz
LTE Band 4	1.4	1710.7	1732.5	1754.3
	3	1711.5	1732.5	1753.5
	5	1712.5	1732.5	1752.5
	10	1715.0	1732.5	1750.0
	15	1715.5	1732.5	1747.5
	20	1720.0	1732.5	1745.0

Test mode:	Nominal Bandwidth (MHz)	RF Channel		
		Low (L)	Middle (M)	High (H)
		MHz	MHz	MHz
LTE Band 5	1.4	824.7	836.5	848.3
	3	825.5	836.5	847.5
	5	826.5	836.5	846.5
	10	829.0	836.5	844.0

Test mode:	Nominal Bandwidth (MHz)	RF Channel		
		Low (L)	Middle (M)	High (H)
		MHz	MHz	MHz
LTE Band 7	5	2502.5	2535.00	2567.5
	10	2505.0	2535.00	2565.0
	15	2507.5	2535.00	2562.5
	20	2510.0	2535.00	2560.0

Test mode:	Nominal Bandwidth (MHz)	RF Channel		
		Low (L)	Middle (M)	High (H)
		MHz	MHz	MHz
LTE Band 12	1.4	699.7	707.5	715.3
	3	700.5	707.5	714.5
	5	701.5	707.5	713.5
	10	704.0	707.5	711.0

Test mode:	Nominal Bandwidth (MHz)	RF Channel		
		Low (L)	Middle (M)	High (H)
		MHz	MHz	MHz
LTE Band 17	5	706.5	710.0	713.5
	10	709.0	710.0	711.0

Test mode:	Nominal Bandwidth (MHz)	RF Channel		
		Low (L)	Middle (M)	High (H)
		MHz	MHz	MHz
LTE Band 30	5	2307.5	2310.0	2305.5
	10	---	2310.0	---

Test mode:	Nominal Bandwidth (MHz)	RF Channel		
		Low (L)	Middle (M)	High (H)
		MHz	MHz	MHz
LTE Band 66	1.4	1710.7	1745.0	1779.3
	3	1711.5	1745.0	1778.2
	5	1712.5	1745.0	1777.5
	10	1715.0	1745.0	1775.0
	15	1717.5	1745.0	1772.5
	20	1720.0	1745.0	1770.0

Test mode:	Nominal Bandwidth (MHz)	RF Channel		
		Low (L)	Middle (M)	High (H)
		MHz	MHz	MHz
LTE Band 71	5	665.5	680.5	695.5
	10	668.0	680.5	693.0
	15	670.5	680.5	690.5
	20	673.0	680.5	688.0

1.3 Block Diagram Showing the Configuration of System Tested

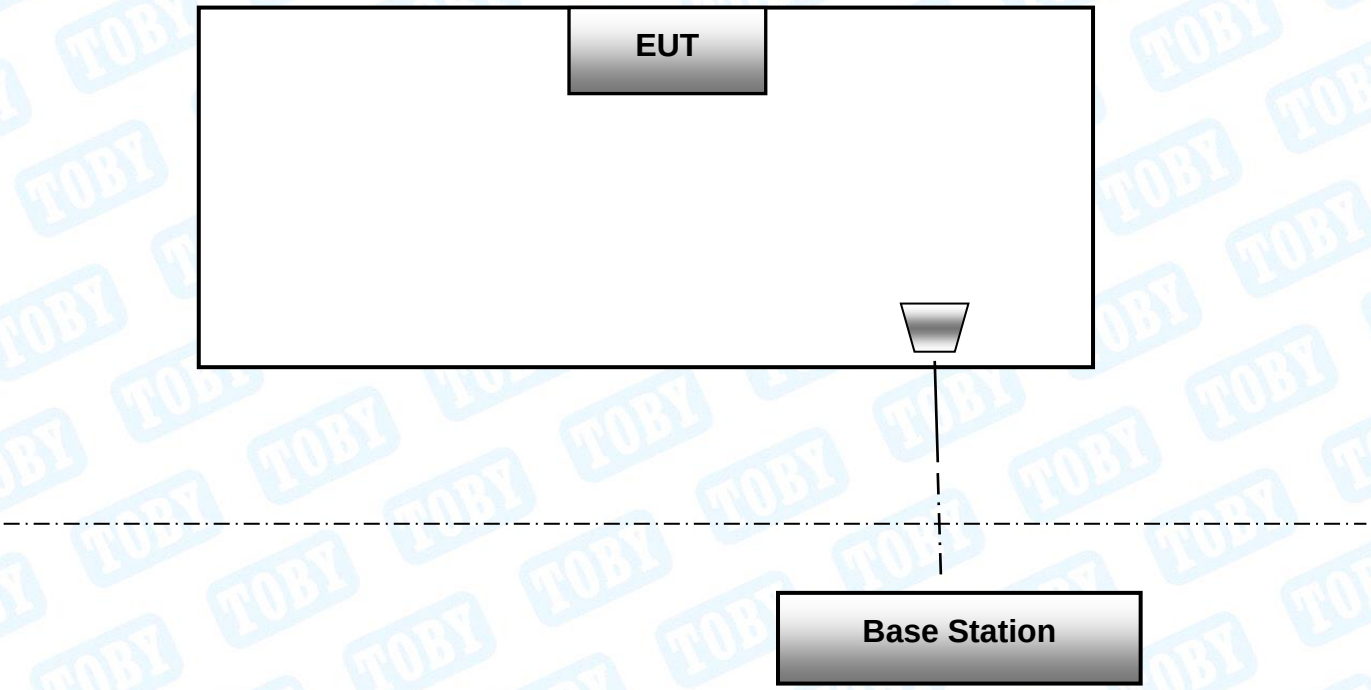

The above block diagram of setup is the normal mode. And more detail please refer to the test setup of each test item of bellow.

1.4 Description of Support Units

The EUT has been tested as an independent unit.

1.5 Measurement Uncertainty

Test Item	Parameters	Expanded Uncertainty (U_{Lab})
RF Power, conducted	/	±0.82 dB
Radiated Emission	Level Accuracy: 9kHz to 30 MHz	±4.60 dB
Radiated Emission	Level Accuracy: 30MHz to 1000 MHz	±4.40 dB
Radiated Emission	Level Accuracy: Above 1000MHz	±4.20 dB

1.6 Test Facility

The testing report were performed by the Shenzhen Toby Technology Co., Ltd., in their facilities located at 1/F., Building 6, Rundongsheng Industrial Zone, Longzhu, Xixiang, Bao'an District, Shenzhen, Guangdong, China. At the time of testing, the following bodies accredited the Laboratory:

CNAS (L5813)

The Laboratory has been accredited by CNAS to ISO/IEC 17025: 2017 General Requirements for the Competence of Testing and Calibration Laboratories for the competence in the field of testing. And the Registration No.: CNAS L5813.

A2LA Certificate No.: 4750.01

The laboratory has been accredited by American Association for Laboratory Accreditation(A2LA) to ISO/IEC 17025：2017 General Requirements for the Competence of Testing and Calibration Laboratories for the technical competence in the field of Electrical Testing. And the A2LA Certificate No.: 4750.01.FCC Accredited Test Site Number: 854351. Designation Number: CN1223.

IC Registration No.: (11950A)

The Laboratory has been registered by Certification and Engineering Bureau of Industry Canada for radio equipment testing. The site registration: Site# 11950A. CAB identifier: CN0056.

2. Test Summary

Test Item	Section in CFR 47	Result
RF Output Power	Part 2.1046 Part 22.913(a)(2) Part 24.232(c) Part 27.50 (b)(10) Part 27.50 (d)(4) Part 27.50 (h)(2)	**PASS**
Peak-to-Average Ratio	Part 24.232(d) Part 27.50(d)(5)	**PASS**
99% & -26 dB Occupied Bandwidth	Part 2.1049 Part 22.917(a) Part 24.238(b) Part 27.53(h) Part 27.53(m)	**PASS**
Spurious Emissions at Antenna Terminal	Part 2.1051 Part 24.238(a) Part 27.53 (h) Part 27.53(m)	**PASS**
Field Strength of Spurious Radiation	Part 2.1053 Part 22.917(a) Part 24.238(a) Part 27.53 (h) Part 27.53(m)	**PASS**
Out of band emission, Band Edge	Part 24.238(a) Part 22.917(a) Part 27.53 (h) Part 27.53(m)	**PASS**
Frequency stability vs. temperature	Part 27.54 Part 24.235 Part 22.355 Part 2.1055(a)(1)(b)	**PASS**
Frequency stability vs. voltage	Part 27.54 Part 24.235 Part 22.355	**PASS**

	Part 2.1055(d)(2)	
Pass: The EUT complies with the essential requirements in the standard.		

3. Test Equipment

Radiation Emission Test (A Site)					
Equipment	**Manufacturer**	**Model No.**	**Serial No.**	**Last Cal.**	**Cal. Due Date**
Spectrum Analyzer	Rohde & Schwarz	FSV40-N	102197	Jun. 20, 2023	Jun. 19, 2024
EMI Test Receiver	Rohde & Schwarz	ESPI	100010/007	Jun. 20, 2023	Jun. 19, 2024
Bilog Antenna	ETS-LINDGREN	3142E	00117537	Feb. 27, 2022	Feb.26, 2024
Horn Antenna	ETS-LINDGREN	3117	00143207	Feb. 26, 2022	Feb.25, 2024
Horn Antenna	SCHWARZBECK	BBHA 9170	1118	Feb. 26, 2022	Feb.25, 2024
Loop Antenna	SCHWARZBECK	FMZB 1519 B	1519B-059	Jun. 26, 2022	Jun.25, 2024
Pre-amplifier	SONOMA	310N	185903	Jun. 20, 2023	Jun. 19, 2024
Pre-amplifier	HP	8449B	3008A00849	Jun. 20, 2023	Jun. 19, 2024
HF Amplifier	Tonscend	TAP0184050	AP21C806129	Sep.01.2022	Aug. 31, 2023
Antenna Conducted Emission					
Equipment	**Manufacturer**	**Model No.**	**Serial No.**	**Last Cal.**	**Cal. Due Date**
Spectrum Analyzer	Agilent	E4407B	MY45106456	Jun. 20, 2023	Jun. 19, 2024
Spectrum Analyzer	Rohde & Schwarz	FSV40-N	102197	Jun. 20, 2023	Jun. 19, 2024
MXA Signal Analyzer	KEYSIGHT	N9020B	MY60110172	Sep.01.2022	Aug. 31, 2023
MXA Signal Analyzer	Agilent	N9020A	MY47380425	Sep.01.2022	Aug. 31, 2023
Vector Signal Generator	Agilent	N5182A	MY50141294	Sep.01.2022	Aug. 31, 2023
Analog Signal Generator	Agilent	N5181A	MY48180463	Sep.01.2022	Aug. 31, 2023
Vector Signal Generator	KEYSIGHT	N5182B	MY59101429	Sep.01.2022	Aug. 31, 2023
Analog Signal Generator	KEYSIGHT	N5173B	MY61252685	Sep.01.2022	Aug. 31, 2023
RF Power Sensor	DARE!! Instruments	RadiPowerRPR3006W	17I00015SNO26	Sep.01.2022	Aug. 31, 2023
	DARE!! Instruments	RadiPowerRPR3006W	17I00015SNO29	Sep.01.2022	Aug. 31, 2023
	DARE!! Instruments	RadiPowerRPR3006W	17I00015SNO31	Sep.01.2022	Aug. 31, 2023
	DARE!! Instruments	RadiPowerRPR3006W	17I00015SNO33	Sep.01.2022	Aug. 31, 2023
RF Control Unit	Tonsced	JS0806-1	21C8060380	N/A	N/A
RF Control Unit	Tonsced	JS0806-2	21F8060439	Sep.01.2022	Aug. 31, 2023
Band Reject Filter Group	Tonsced	JS0806-F	21D8060414	Jun. 20, 2023	Jun. 19, 2024
Power Control Box	Tonsced	JS0806-4ADC	21C8060387	N/A	N/A
Wideband Radio Comunication Tester	Rohde & Schwarz	CMW500	144382	Sep.01.2022	Aug. 31, 2023
Universal Radio Communication Tester	Rohde&Schwarz	CMW500	168796	Feb. 23, 2023	Feb.22, 2024
Temperature and	ZhengHang	ZH-QTH-1500	ZH2107264	Jun. 20, 2023	Jun. 19, 2024

Humidity Chamber					

4. Conducted RF Output Power

4.1 Test Standard and Limit

4.1.1 Test Standard

FCC part 2.1046, FCC part 22.913(a)(2),
FCC part 24.232(c), FCC Part 27.50(b)&(d),
FCC Part 27.50 (h)

4.2 Test Setup

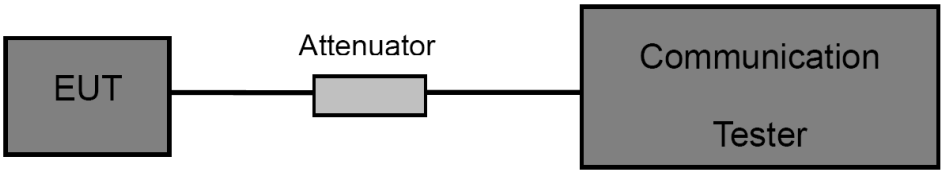

4.3 Test Procedure

(1) The EUT is coupled to the Base Station with the suitable Attenuator, the path loss is calibrated to correct the reading.
(2) A call is set up by the Base Station to the generic call set up procedure.
(3) Set EUT at maximum power level through base station by power level command.
(4) Then read record the power value from the Base Station in dBm.

4.4 EUT Operating Condition

The EUT was continuously connected with the Base station and transmitting in the max power during the test.

4.5 Deviation From Test Standard

No deviation

4.6 Test Data

Please refer to the Appendix G Test Data

5. Peak-Average Ratio

5.1 Test Standard and Limit

5.1.1 Test Standard

FCC part 24.232(d)

FCC Part 27.50(d), FCC Part 27.50 (h)

5.1.2 Test Limit

Peak-to-Average Ratio
The peak-to-average ratio (PAR) of the transmission may not exceed 13 dB.

5.2 Test Setup

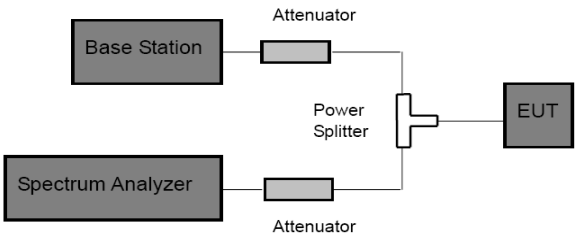

5.3 Test Procedure

According with KDB 971168

(1) The signal analyzer's CCDF measurement profile is enabled.

(2) Frequency = carrier center frequency.

(3) Measurement BW>Emission bandwidth of signal.

(4) The signal analyzer was set to collect one million samples to generate the CCDF curve.

(5) Set the EUT working in highest power level, measured and recorded the 0.1% as PAPR level.

(6) The measurement interval was set depending on the type of signal analyzed. For continuous signals (>98% duty cycle), the measurement interval was set to 1ms. For burst transmissions, the spectrum analyzer is set to use an internal "RF Burst" trigger that is synced with an incoming pulse and the measurement interval is set to less than the duration of the "on time" of one burst to ensure that energy is only captured during a time in which of the transmitter is operating at maximum power.

5.4 EUT Operating Condition

The EUT was continuously connected with the Base station and transmitting in the max power during the test.

5.5 Deviation From Test Standard

No deviation

5.6 Test Data

Please refer to the Appendix G Test Data

6. Occupied Bandwidth

6.1 Test Standard and Limit

6.1.1 Test Standard

FCC Part 2: 2.1049, FCC Part 22.917(a),
FCC part 24.238(b)
FCC Part 27.53(h)
FCC Part 27.53(m)

6.1.2 Test Requirement

According to FCC section 2.1049, the occupied bandwidth is the frequency bandwidth such that below its lower and above its upper frequency limits, the mean powers radiated are each equal to 0.5 percent of the total mean power radiated by a given emission.

Occupied bandwidth is also known as 99% power and -26dBC occupied bandwidths.

6.2 Test Setup

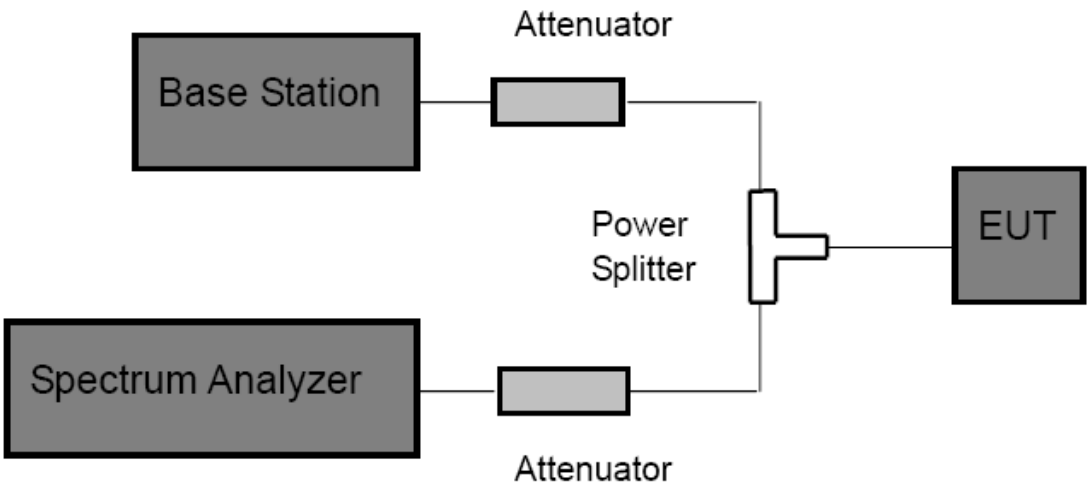

6.3 Test Procedure

(1) The EUT was directly connected to the spectrum analyzer and Base station via power splitter as show in the block diagram above.
(2) The resolution bandwidth of the Spectrum Analyzer is set to at least 1% of the occupied bandwidth. VBW= 3 times RBW.
(3) The low, middle and the high channels are selected to perform tests respectively.
(4) Set the frequency range of the Spectrum Analyzer suitably to capture the waveform; search peak; make a line whose value is 26dB lower than the peak; mark two points which the line intersected the waveform at; finally record the delta of the two points as the occupied bandwidth and the plot.

(5) Set the Spectrum Analyzer Occupied bandwidth function to measure the 99% occupied bandwidth.

6.4 EUT Operating Condition

The EUT was continuously connected with the Base station and transmitting in the max power during the test.

6.5 Deviation From Test Standard

No deviation

6.6 Test Data

Please refer to the Appendix G Test Data

7. Out of Band Emission at Antenna Terminals

7.1 Test Standard and Limit

7.1.1 Test Standard

FCC Part 2: 2.1051, 2.1057

FCC Part 22.917(a), FCC part 24.238(a)

FCC Part 27.53 (h),FCC Part 27.53(m)

7.1.2 Test Limit

Band 7: For mobile digital stations, the attenuation factor shall be not less than 40 + 10 log (P) dB on all frequencies between the channel edge and 5 megahertz from the channel edge, 43 + 10 log (P) dB on all frequencies between 5 megahertz and X megahertz from the channel edge, and 55 + 10 log (P) dB on all frequencies more than X megahertz from the channel edge, where X is the greater of 6 megahertz or the actual emission bandwidth as defined in paragraph (m)(6) of this section. In addition, the attenuation factor shall not be less that 43 + 10 log (P) dB on all frequencies between 2490.5 MHz and 2496 MHz and 55 + 10 log (P) dB at or below 2490.5 MHz.The power of any emission outside of the authorized operating frequency ranges must be attenuated below the transmitting power(P) by a factor of at least 43+10log(P) dB. For all power levels +30 dBm to 0 dBm, this becomes a constant specification limit of -13 dBm.

7.2 Test Setup

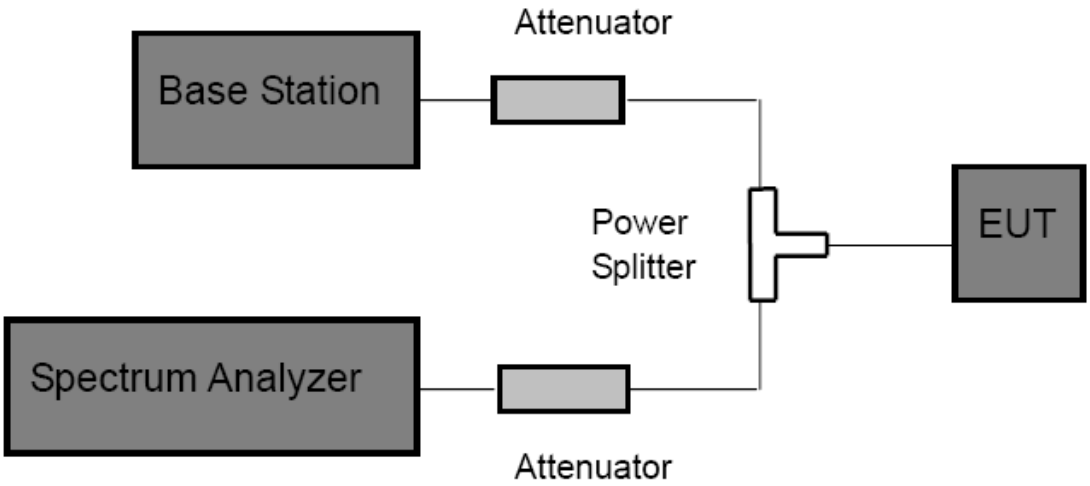

7.3 Test Procedure

1 The RF output of the transceiver was connected to a spectrum analyzer through appropriate attenuation.

2 The resolution bandwidth of the spectrum analyzer was set at 100 kHz when below 1GHz, 1MHz when above 1 GHz; sufficient scans were taken to show the out of band Emissions if any up to 10th harmonic.

3 For the out of band: Set the RBW=100 kHz, VBW=300 kHz when below 1 GHz, RBW =1 MHz, VBW=3 MHz when above 1 GHz, Start=30MHz, Stop= 10th harmonic.

4 Band Edge Requirements: In the 1 MHz bands immediately outside and adjacent to the frequency block, a resolution bandwidth of at least 1 percent of the emission bandwidth of the fundamental emission of the transmitter.

7.4 EUT Operating Condition

The EUT was continuously connected with the Base station and transmitting in the max power during the test.

7.5 Deviation From Test Standard

No deviation

7.6 Test Data

Please refer to the Appendix G Test Data

8. Band Edge Test

8.1 Test Standard and Limit

8.1.1 Test Standard

FCC Part 2: 2.1051, 2.1057

FCC Part 22.917(a), FCC part 24.238(a)

FCC Part 27.53 (h),FCC Part 27.53(m)

8.1.2 Test Limit

Band 7: For mobile digital stations, the attenuation factor shall be not less than 40 + 10 log (P) dB on all frequencies between the channel edge and 5 megahertz from the channel edge, 43 + 10 log (P) dB on all frequencies between 5 megahertz and X megahertz from the channel edge, and 55 + 10 log (P) dB on all frequencies more than X megahertz from the channel edge, where X is the greater of 6 megahertz or the actual emission bandwidth as defined in paragraph (m)(6) of this section. In addition, the attenuation factor shall not be less that 43 + 10 log (P) dB on all frequencies between 2490.5 MHz and 2496 MHz and 55 + 10 log (P) dB at or below 2490.5 MHz.The power of any emission outside of the authorized operating frequency ranges must be attenuated below the transmitting power(P) by a factor of at least 43+10log(P) dB. For all power levels +30 dBm to 0 dBm, this becomes a constant specification limit of -13 dBm.

8.2 Test Setup

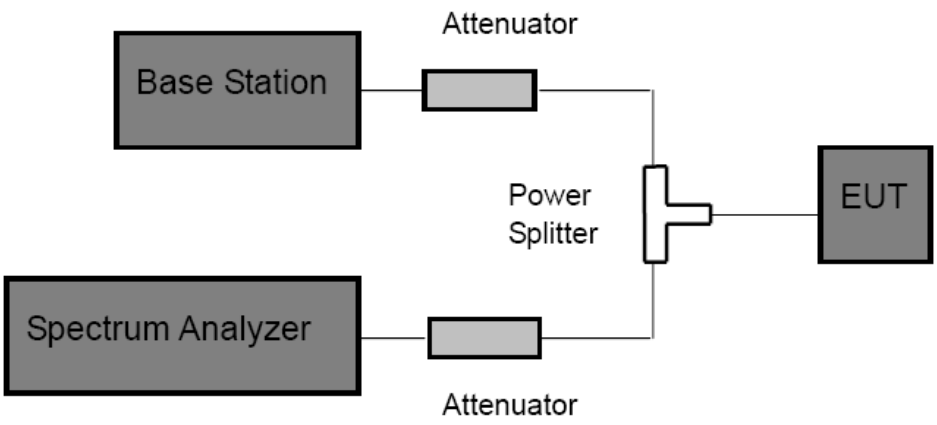

8.3 Test Procedure

(1) The EUT was directly connected to the spectrum analyzer and Base station via power splitter as show in the block diagram above.

(2) Band Edge Requirements: In the 1 MHz bands immediately outside and adjacent to the frequency block, a resolution bandwidth of at least 1 percent of the emission bandwidth of the

fundamental emission of the transmitter.

8.4 EUT Operating Condition

The EUT was continuously connected with the Base station and transmitting in the max power during the test.

8.5 Deviation From Test Standard

No deviation

8.6 Test Data

Please refer to the Appendix G Test Data

9. Radiated Output Power

9.1 Test Standard and Limit

9.1.1 Test Standard

FCC Part 2.1046, FCC Part 22.913(a)(2),
FCC part 24.232(c)
FCC part 27.50(c), FCC part 27.50(d)

9.1.2 Test Limit

E.I.R.P	E.I.R.P	E.R.P	E.I.R.P
LTE Band 2	**LTE Band 4**	**LTE Band 5**	**LTE Band 7**
2W(33 dBm)	1W(30 dBm)	7W(38.45dBm)	2W(33 dBm)
E.R.P	**E.R.P**	**E.I.R.P**	**E.R.P**
LTE Band 12	**LTE Band 17**	**LTE Band 25**	**LTE Band 26**
3W(34.77dBm)	3W(34.77dBm)	2W(33 dBm)	7W(38.45dBm)

9.2 Test Setup

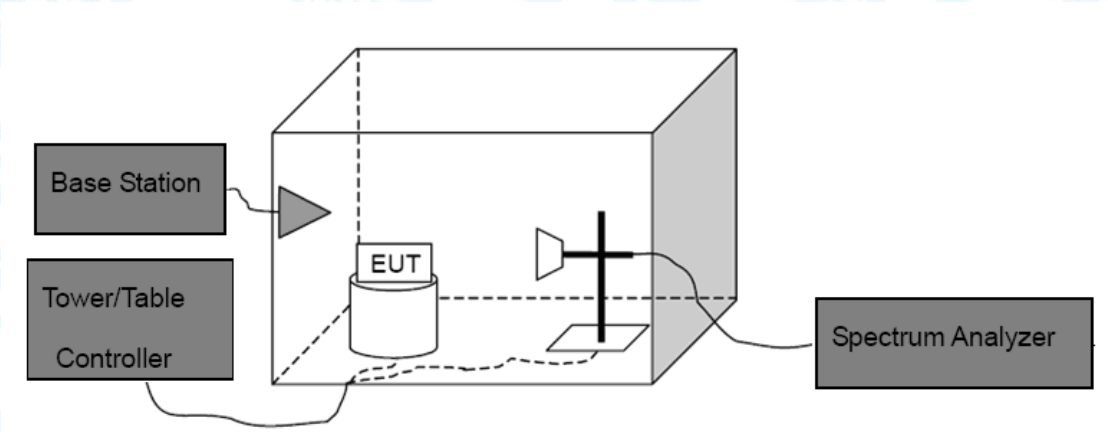

Above 1G

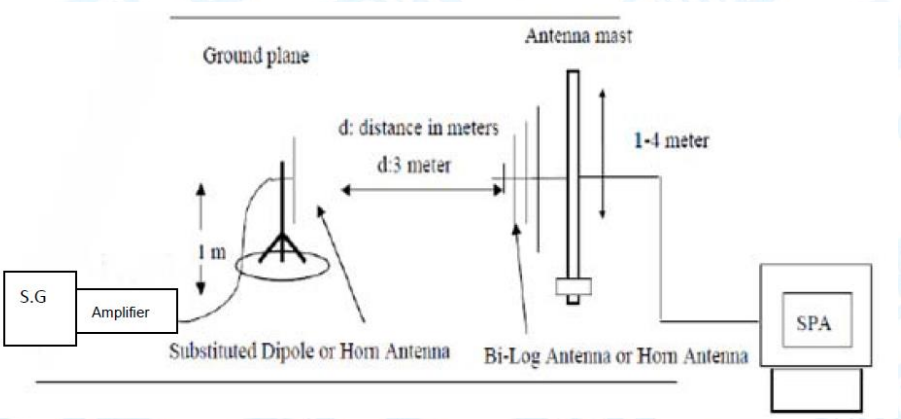

Substituted Method

9.3 Test Procedure

(1) The EUT was placed on an non-conductive rotating platform with 0.8 meter height in an anechoic chamber. The radiated emission at the fundamental frequency was measured at 3 m with a test antenna and a spectrum analyzer with RBW=3 MHz, VBW=3 MHz and peak detector settings.

(2) During the measurement, the EUT was enforced in maximum power and linked with the Base Station. The highest was recorded from analyzer power level (LVT) from the 360 degrees rotation of the turntable and the test antenna raised and lowered over a range from 1 to 4 meters in both horizontally and vertically polarized orientations.

(3) Effective Isotropic Radiated Power (EIRP) was measured by substitution method according to C63.26. The EUT was replaced by dipole antenna (for frequency below 1 GHz) or Horn antenna (for frequency above 1 GHz) at same location with same polarize of receiver antenna and then a known power of each measure frequency from S.G. was applied into the dipole antenna or Horn antenna through a TX cable, and then recorded the maximum Analyzer reading through raised and lowered the test antenna.

Note: In test, the S.G Connect the Pre-amplifier(Sonoma 310N Pre-amplifier for frequency below 1 GHz, HP 8449B Pre-amplifier for frequency above 1 GHz)

Then the EUT's EIRP and ERP was calculated with the correction factor:

ERP=S.G.Level +Antenna Gain Cord.(dB)-Cable Loss(dB)

EIRP=S.G.Level+Antenna Gain Cord.(dBi)-Cable Loss(dB)

9.4 EUT Operating Condition

The EUT was continuously connected with the Base station and transmitting in the max power during the test.

9.5 Deviation From Test Standard

No deviation

9.6 Test Data

Please refer to the Appendix G Test Data

10. Radiated Out Band of Emissions

10.1 Test Standard and Limit

10.1.1 Test Standard

FCC Part 2: 2.1053, FCC Part 22.917(a)

FCC part 24.238(a)

FCC Part 27.53 (h),FCC Part 27.53(m)

10.1.2 Test Limit

The power of any emission outside of the authorized operating frequency ranges must be attenuated below the transmitting power(P) by a factor of at least 43+10log(P) dB. For all power levels +30 dBm to 0 dBm, this becomes a constant specification limit of -13 dBm.

10.2 Test Setup

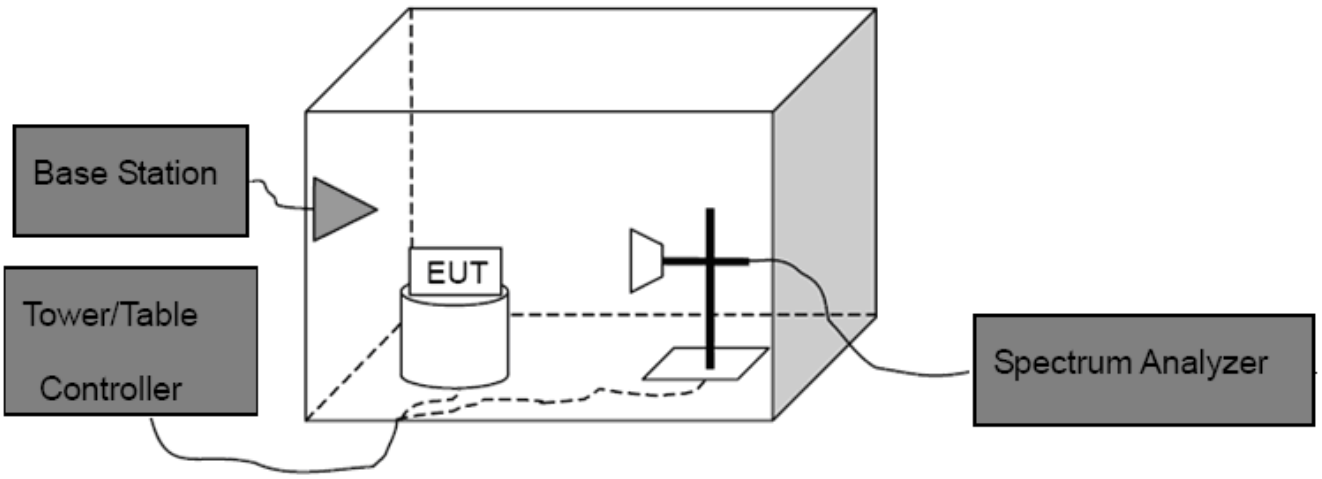

10.3 Test Procedure

(1) The test system setup as show in the block diagram above.

(2) The EUT was placed on an non-conductive rotating platform in an anechoic chamber. The radiated spurious emissions from 30MHz to 10th harmonious of fundamental frequency were measured at 3 m with a test antenna and a spectrum analyzer with RBW=1 MHz, VBW=1 MHz, peak detector settings.

(3) During the measurement, the EUT was enforced in maximum power and linked with a base station. All the spurious emissions at 3m were measured by rotation of the turntable and the test antenna raised and lowered over a range from 1 to 4 meters in both horizontally and vertically polarized orientations.

(4) When found the maximum level of emissions from the EUT. Remove the EUT and replace it with substitution antenna. A signal generator was connected to the substitution antenna by a non-radiating cable. The absolute levels of the spurious emissions were measured by the

substitution.

Spurious emissions in dB=10 log(TX power in Watts/0.001)-the absolute level

Spurious attenuation limit in dB=43+10 log(power out in Watts)

10.4 EUT Operating Condition

The EUT was continuously connected with the Base station and transmitting in the max power during the test.

10.5 Deviation From Test Standard

No deviation

10.6 Test Data

Please refer to the Attachment A.

Measurement Data (worst case)

11. Frequency Stability

11.1 Test Standard and Limit

11.1.1 Test Standard

FCC Part 2.1055(a)(1)(b) FCC Part 22.355

FCC Part 24.235, Part 27.54

11.1.2 Limit

Limit
±2.5ppm

11.2 Test Setup

For Temperature Test:

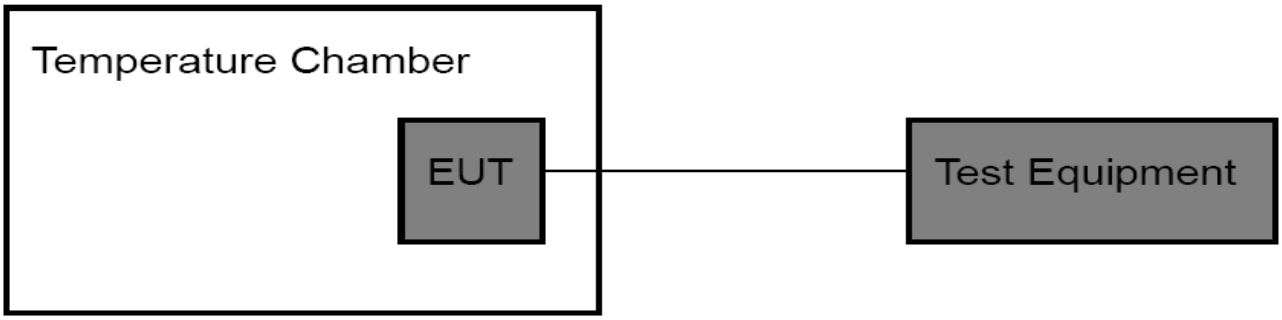

For Voltage Test:

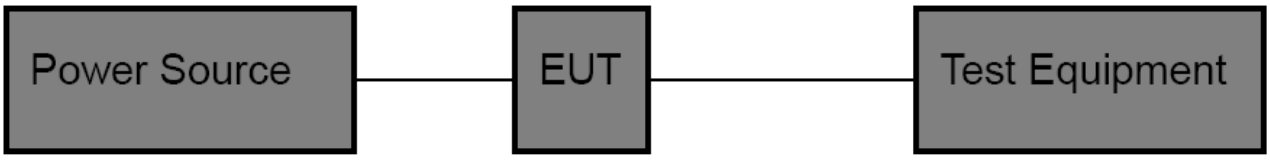

11.3 Test Procedure

Test Procedures for Temperature Variation:

(1) The EUT was set up in the thermal chamber and connected with the base station.

(2) With power off, the temperature was decreased to -30℃ and the EUT was stabilized for three hours. Power was applied and the maximum change in frequency was recorded within one minute.

(3) With power off, the temperature was raised in 10℃ set up to 50℃ and the EUT was stabilized for three hours. Power was applied and the maximum change in frequency was recorded within one minute.

(4) If the EUT cannot be turned on at -30℃, the testing lowest temperature will be raised in 10℃ step until the EUT can be turned on.

Test Procedures for Voltage Variation:

(1) The EUT was placed in a temperature chamber at 25±5℃ and connected with the base station.

(2) Reduce the input voltage to specify extreme voltage variation (+/- 15%) and endpoint, record the maximum frequency change.

(3) The variation in frequency was measured for the worst case.

11.4 EUT Operating Condition

The Equipment Under Test was set to Communication with the Base Station.

11.5 Deviation From Test Standard

No deviation

11.6 Test Data

Please refer to the Appendix G Test Data

ATTACHMENT A--RADIATED OUTPUT POWER

Radiated Power (EIRP) for LTE Band 2 / 1.4M								
Modulation	RB		Channel	Antenna (H&V)	SG Level (dBm)	Antenna Factor (dBd)	Cable Loss (dB)	EIRP (dBm)
	Size	offset						
QPSK	1	0	Lowest	H	23.39	5.01	2.59	25.81
				V	17.94	5.01	2.59	20.36
	1	0	Middle	H	21.49	4.82	2.59	23.72
				V	21.45	4.82	2.59	23.68
	1	0	Highest	H	22.09	4.45	2.59	23.95
				V	17.30	4.45	2.59	19.16
16QAM	1	0	Lowest	H	21.38	5.01	2.59	23.80
				V	18.75	5.01	2.59	21.17
	1	0	Middle	H	20.00	4.82	2.59	22.23
				V	16.50	4.82	2.59	18.73
	1	0	Highest	H	16.82	4.45	2.59	18.68
				V	17.23	4.45	2.59	19.09
Limit								**33**

Radiated Power (EIRP) for LTE Band 2 / 3M								
Modulation	RB		Channel	Antenna (H&V)	SG Level (dBm)	Antenna Factor (dBd)	Cable Loss (dB)	EIRP (dBm)
	Size	offset						
QPSK	1	0	Lowest	H	21.88	5.01	2.59	24.30
				V	16.89	5.01	2.59	19.31
	1	0	Middle	H	25.10	4.82	2.59	27.33
				V	20.54	4.82	2.59	22.77
	1	0	Highest	H	22.63	4.45	2.59	24.49
				V	17.78	4.45	2.59	19.64
16QAM	1	0	Lowest	H	21.81	5.01	2.59	24.23
				V	16.36	5.01	2.59	18.78
	1	0	Middle	H	16.37	4.82	2.59	18.60
				V	17.38	4.82	2.59	19.61
	1	0	Highest	H	20.59	4.45	2.59	22.45
				V	18.40	4.45	2.59	20.26
Limit								**33**

Radiated Power (EIRP) for LTE Band 2 / 5M								
Modulation	RB		Channel	Antenna (H&V)	SG Level (dBm)	Antenna Factor (dBd)	Cable Loss (dB)	EIRP (dBm)
	Size	offset						
QPSK	1	0	Lowest	H	21.21	5.01	2.59	23.63
				V	18.55	5.01	2.59	20.97
	1	0	Middle	H	20.14	4.82	2.59	22.37
				V	21.17	4.82	2.59	23.40
	1	0	Highest	H	22.76	4.45	2.59	24.62
				V	17.57	4.45	2.59	19.43
16QAM	1	0	Lowest	H	18.26	5.01	2.59	20.68
				V	16.72	5.01	2.59	19.14
	1	0	Middle	H	16.06	4.82	2.59	18.29
				V	16.42	4.82	2.59	18.65
	1	0	Highest	H	17.44	4.45	2.59	19.30
				V	16.91	4.45	2.59	18.77
Limit								**33**

Radiated Power (EIRP) for LTE Band 2 / 10M								
Modulation	RB		Channel	Antenna (H&V)	SG Level (dBm)	Antenna Factor (dBd)	Cable Loss (dB)	EIRP (dBm)
	Size	offset						
QPSK	1	0	Lowest	H	23.93	5.01	2.59	26.35
				V	17.95	5.01	2.59	20.37
	1	0	Middle	H	23.08	4.82	2.59	25.31
				V	16.76	4.82	2.59	18.99
	1	0	Highest	H	23.59	4.45	2.59	25.45
				V	23.03	4.45	2.59	24.89
16QAM	1	0	Lowest	H	17.35	5.01	2.59	19.77
				V	17.37	5.01	2.59	19.79
	1	0	Middle	H	17.92	4.82	2.59	20.15
				V	16.05	4.82	2.59	18.28
	1	0	Highest	H	21.09	4.45	2.59	22.95
				V	16.54	4.45	2.59	18.40
Limit								**33**

Radiated Power (EIRP) for LTE Band 2 / 15M								
Modulation	RB		Channel	Antenna (H&V)	SG Level (dBm)	Antenna Factor (dBd)	Cable Loss (dB)	EIRP (dBm)
	Size	offset						
QPSK	1	0	Lowest	H	20.81	5.01	2.59	23.23
				V	17.85	5.01	2.59	20.27
	1	0	Middle	H	20.18	4.82	2.59	22.41
				V	17.44	4.82	2.59	19.67
	1	0	Highest	H	21.11	4.45	2.59	22.97
				V	18.03	4.45	2.59	19.89
16QAM	1	0	Lowest	H	20.47	5.01	2.59	22.89
				V	16.29	5.01	2.59	18.71
	1	0	Middle	H	19.02	4.82	2.59	21.25
				V	17.04	4.82	2.59	19.27
	1	0	Highest	H	20.15	4.45	2.59	22.01
				V	17.30	4.45	2.59	19.16
Limit								**33**

Radiated Power (EIRP) for LTE Band 2 / 20M								
Modulation	RB		Channel	Antenna (H&V)	SG Level (dBm)	Antenna Factor (dBd)	Cable Loss (dB)	EIRP (dBm)
	Size	offset						
QPSK	1	0	Lowest	H	22.94	5.01	2.59	25.36
				V	18.25	5.01	2.59	20.67
	1	0	Middle	H	20.34	4.82	2.59	22.57
				V	22.36	4.82	2.59	24.59
	1	0	Highest	H	24.22	4.45	2.59	26.08
				V	18.11	4.45	2.59	19.97
16QAM	1	0	Lowest	H	20.18	5.01	2.59	22.60
				V	18.29	5.01	2.59	20.71
	1	0	Middle	H	20.12	4.82	2.59	22.35
				V	15.77	4.82	2.59	18.00
	1	0	Highest	H	22.80	4.45	2.59	24.66
				V	17.34	4.45	2.59	19.20
Limit								**33**

Radiated Power (EIRP) for LTE Band 4 / 1.4M								
Modulation	RB		Channel	Antenna (H&V)	SG Level (dBm)	Antenna Factor (dBd)	Cable Loss (dB)	EIRP (dBm)
	Size	offset						
QPSK	1	0	Lowest	H	21.15	5.01	2.59	23.57
				V	17.15	5.01	2.59	19.57
	1	0	Middle	H	20.48	4.82	2.59	22.71
				V	17.25	4.82	2.59	19.48
	1	0	Highest	H	26.11	4.45	2.59	27.97
				V	21.13	4.45	2.59	22.99
16QAM	1	0	Lowest	H	17.73	5.01	2.59	20.15
				V	15.86	5.01	2.59	18.28
	1	0	Middle	H	20.99	4.82	2.59	23.22
				V	16.16	4.82	2.59	18.39
	1	0	Highest	H	16.59	4.45	2.59	18.45
				V	16.29	4.45	2.59	18.15
Limit								**30**

Radiated Power (EIRP) for LTE Band 4 / 3M								
Modulation	RB		Channel	Antenna (H&V)	SG Level (dBm)	Antenna Factor (dBd)	Cable Loss (dB)	EIRP (dBm)
	Size	offset						
QPSK	1	0	Lowest	H	19.86	5.01	2.59	22.28
				V	19.13	5.01	2.59	21.55
	1	0	Middle	H	23.33	4.82	2.59	25.56
				V	17.63	4.82	2.59	19.86
	1	0	Highest	H	24.92	4.45	2.59	26.78
				V	19.41	4.45	2.59	21.27
16QAM	1	0	Lowest	H	16.45	5.01	2.59	18.87
				V	17.07	5.01	2.59	19.49
	1	0	Middle	H	17.02	4.82	2.59	19.25
				V	16.05	4.82	2.59	18.28
	1	0	Highest	H	21.69	4.45	2.59	23.55
				V	18.99	4.45	2.59	20.85
Limit								**30**

Radiated Power (EIRP) for LTE Band 4 / 5M								
Modulation	RB		Channel	Antenna (H&V)	SG Level (dBm)	Antenna Factor (dBd)	Cable Loss (dB)	EIRP (dBm)
	Size	offset						
QPSK	1	0	Lowest	H	20.82	5.01	2.59	23.24
				V	16.54	5.01	2.59	18.96
	1	0	Middle	H	22.58	4.82	2.59	24.81
				V	18.78	4.82	2.59	21.01
	1	0	Highest	H	21.03	4.45	2.59	22.89
				V	17.41	4.45	2.59	19.27
16QAM	1	0	Lowest	H	19.28	5.01	2.59	21.70
				V	16.46	5.01	2.59	18.88
	1	0	Middle	H	18.29	4.82	2.59	20.52
				V	18.76	4.82	2.59	20.99
	1	0	Highest	H	19.75	4.45	2.59	21.61
				V	16.47	4.45	2.59	18.33
Limit								**30**

Radiated Power (EIRP) for LTE Band 4 / 10M								
Modulation	RB		Channel	Antenna (H&V)	SG Level (dBm)	Antenna Factor (dBd)	Cable Loss (dB)	EIRP (dBm)
	Size	offset						
QPSK	1	0	Lowest	H	21.60	5.01	2.59	24.02
				V	20.62	5.01	2.59	23.04
	1	0	Middle	H	21.97	4.82	2.59	24.20
				V	20.78	4.82	2.59	23.01
	1	0	Highest	H	23.45	4.45	2.59	25.31
				V	20.78	4.45	2.59	22.64
16QAM	1	0	Lowest	H	20.87	5.01	2.59	23.29
				V	16.69	5.01	2.59	19.11
	1	0	Middle	H	18.95	4.82	2.59	21.18
				V	16.57	4.82	2.59	18.80
	1	0	Highest	H	20.53	4.45	2.59	22.39
				V	16.62	4.45	2.59	18.48
Limit								**30**

Radiated Power (EIRP) for LTE Band 4 / 15M								
Modulation	RB		Channel	Antenna (H&V)	SG Level (dBm)	Antenna Factor (dBd)	Cable Loss (dB)	EIRP (dBm)
	Size	offset						
QPSK	1	0	Lowest	H	23.30	5.01	2.59	25.72
				V	20.97	5.01	2.59	23.39
	1	0	Middle	H	23.95	4.82	2.59	26.18
				V	19.55	4.82	2.59	21.78
	1	0	Highest	H	21.91	4.45	2.59	23.77
				V	19.61	4.45	2.59	21.47
16QAM	1	0	Lowest	H	19.22	5.01	2.59	21.64
				V	15.73	5.01	2.59	18.15
	1	0	Middle	H	22.18	4.82	2.59	24.41
				V	19.53	4.82	2.59	21.76
	1	0	Highest	H	21.52	4.45	2.59	23.38
				V	16.40	4.45	2.59	18.26
Limit								**30**

Radiated Power (EIRP) for LTE Band 4 / 20M								
Modulation	RB		Channel	Antenna (H&V)	SG Level (dBm)	Antenna Factor (dBd)	Cable Loss (dB)	EIRP (dBm)
	Size	offset						
QPSK	1	0	Lowest	H	21.01	5.01	2.59	23.43
				V	19.33	5.01	2.59	21.75
	1	0	Middle	H	19.76	4.82	2.59	21.99
				V	18.18	4.82	2.59	20.41
	1	0	Highest	H	25.15	4.45	2.59	27.01
				V	19.08	4.45	2.59	20.94
16QAM	1	0	Lowest	H	19.97	5.01	2.59	22.39
				V	16.63	5.01	2.59	19.05
	1	0	Middle	H	20.48	4.82	2.59	22.71
				V	16.41	4.82	2.59	18.64
	1	0	Highest	H	17.27	4.45	2.59	19.13
				V	18.46	4.45	2.59	20.32
Limit								**30**

Radiated Power (ERP) for LTE Band 5 / 1.4M								
Modulation	RB		Channel	Antenna (H&V)	SG Level (dBm)	Antenna Factor (dBd)	Cable Loss (dB)	ERP (dBm)
	Size	offset						
QPSK	1	0	Lowest	H	18.46	5.01	2.59	20.88
				V	21.29	5.01	2.59	23.71
	1	0	Middle	H	21.18	4.82	2.59	23.41
				V	17.52	4.82	2.59	19.75
	1	0	Highest	H	23.03	4.45	2.59	24.89
				V	17.08	4.45	2.59	18.94
16QAM	1	0	Lowest	H	18.40	5.01	2.59	20.82
				V	15.92	5.01	2.59	18.34
	1	0	Middle	H	21.02	4.82	2.59	23.25
				V	16.81	4.82	2.59	19.04
	1	0	Highest	H	17.42	4.45	2.59	19.28
				V	16.19	4.45	2.59	18.05
Limit								**38.45**

Radiated Power (ERP) for LTE Band 5 / 3M								
Modulation	RB		Channel	Antenna (H&V)	SG Level (dBm)	Antenna Factor (dBd)	Cable Loss (dB)	ERP (dBm)
	Size	offset						
QPSK	1	0	Lowest	H	23.44	5.01	2.59	25.86
				V	20.62	5.01	2.59	23.04
	1	0	Middle	H	20.66	4.82	2.59	22.89
				V	17.64	4.82	2.59	19.87
	1	0	Highest	H	24.42	4.45	2.59	26.28
				V	19.48	4.45	2.59	21.34
16QAM	1	0	Lowest	H	17.59	5.01	2.59	20.01
				V	18.01	5.01	2.59	20.43
	1	0	Middle	H	19.25	4.82	2.59	21.48
				V	16.38	4.82	2.59	18.61
	1	0	Highest	H	20.27	4.45	2.59	22.13
				V	16.91	4.45	2.59	18.77
Limit								**38.45**

Radiated Power (ERP) for LTE Band 5 / 5M								
Modulation	RB		Channel	Antenna (H&V)	SG Level (dBm)	Antenna Factor (dBd)	Cable Loss (dB)	ERP (dBm)
	Size	offset						
QPSK	1	0	Lowest	H	24.28	5.01	2.59	26.70
				V	19.88	5.01	2.59	22.30
	1	0	Middle	H	23.59	4.82	2.59	25.82
				V	18.85	4.82	2.59	21.08
	1	0	Highest	H	25.52	4.45	2.59	27.38
				V	18.75	4.45	2.59	20.61
16QAM	1	0	Lowest	H	18.94	5.01	2.59	21.36
				V	17.67	5.01	2.59	20.09
	1	0	Middle	H	19.01	4.82	2.59	21.24
				V	16.30	4.82	2.59	18.53
	1	0	Highest	H	22.56	4.45	2.59	24.42
				V	17.95	4.45	2.59	19.81
Limit								**38.45**

Radiated Power (ERP) for LTE Band 5 / 10M								
Modulation	RB		Channel	Antenna (H&V)	SG Level (dBm)	Antenna Factor (dBd)	Cable Loss (dB)	ERP (dBm)
	Size	offset						
QPSK	1	0	Lowest	H	24.21	5.01	2.59	26.63
				V	21.18	5.01	2.59	23.60
	1	0	Middle	H	18.93	4.82	2.59	21.16
				V	20.28	4.82	2.59	22.51
	1	0	Highest	H	23.20	4.45	2.59	25.06
				V	17.79	4.45	2.59	19.65
16QAM	1	0	Lowest	H	18.22	5.01	2.59	20.64
				V	17.23	5.01	2.59	19.65
	1	0	Middle	H	16.63	4.82	2.59	18.86
				V	18.58	4.82	2.59	20.81
	1	0	Highest	H	21.73	4.45	2.59	23.59
				V	16.55	4.45	2.59	18.41
Limit								**38.45**

Radiated Power (EIRP) for LTE Band 7 / 5M								
Modulation	RB		Channel	Antenna (H&V)	SG Level (dBm)	Antenna Factor (dBd)	Cable Loss (dB)	EIRP (dBm)
	Size	offset						
QPSK	1	0	Lowest	H	20.98	5.01	2.59	23.40
				V	16.60	5.01	2.59	19.02
	1	0	Middle	H	21.70	4.82	2.59	23.93
				V	17.70	4.82	2.59	19.93
	1	0	Highest	H	23.00	4.45	2.59	24.86
				V	20.40	4.45	2.59	22.26
16QAM	1	0	Lowest	H	20.23	5.01	2.59	22.65
				V	16.18	5.01	2.59	18.60
	1	0	Middle	H	20.65	4.82	2.59	22.88
				V	15.95	4.82	2.59	18.18
	1	0	Highest	H	17.72	4.45	2.59	19.58
				V	17.68	4.45	2.59	19.54
Limit								**34.77**

Radiated Power (EIRP) for LTE Band 7 / 10M								
Modulation	RB		Channel	Antenna (H&V)	SG Level (dBm)	Antenna Factor (dBd)	Cable Loss (dB)	EIRP (dBm)
	Size	offset						
QPSK	1	0	Lowest	H	24.91	5.01	2.59	27.33
				V	18.90	5.01	2.59	21.32
	1	0	Middle	H	21.17	4.82	2.59	23.40
				V	19.76	4.82	2.59	21.99
	1	0	Highest	H	22.37	4.45	2.59	24.23
				V	18.69	4.45	2.59	20.55
16QAM	1	0	Lowest	H	19.05	5.01	2.59	21.47
				V	17.42	5.01	2.59	19.84
	1	0	Middle	H	21.08	4.82	2.59	23.31
				V	16.14	4.82	2.59	18.37
	1	0	Highest	H	20.36	4.45	2.59	22.22
				V	17.16	4.45	2.59	19.02
Limit								**34.77**

Radiated Power (EIRP) for LTE Band 7 / 15M								
Modulation	RB		Channel	Antenna (H&V)	SG Level (dBm)	Antenna Factor (dBd)	Cable Loss (dB)	EIRP (dBm)
	Size	offset						
QPSK	1	0	Lowest	H	23.98	5.01	2.59	26.40
				V	19.08	5.01	2.59	21.50
	1	0	Middle	H	20.54	4.82	2.59	22.77
				V	21.69	4.82	2.59	23.92
	1	0	Highest	H	25.89	4.45	2.59	27.75
				V	19.05	4.45	2.59	20.91
16QAM	1	0	Lowest	H	19.21	5.01	2.59	21.63
				V	15.62	5.01	2.59	18.04
	1	0	Middle	H	19.01	4.82	2.59	21.24
				V	15.14	4.82	2.59	17.37
	1	0	Highest	H	16.22	4.45	2.59	18.08
				V	17.58	4.45	2.59	19.44
Limit								**34.77**

Radiated Power (EIRP) for LTE Band 7 / 20M								
Modulation	RB		Channel	Antenna (H&V)	SG Level (dBm)	Antenna Factor (dBd)	Cable Loss (dB)	EIRP (dBm)
	Size	offset						
QPSK	1	0	Lowest	H	25.43	5.01	2.59	27.85
				V	21.26	5.01	2.59	23.68
	1	0	Middle	H	22.44	4.82	2.59	24.67
				V	20.88	4.82	2.59	23.11
	1	0	Highest	H	23.84	4.45	2.59	25.70
				V	18.19	4.45	2.59	20.05
16QAM	1	0	Lowest	H	23.09	5.01	2.59	25.51
				V	17.22	5.01	2.59	19.64
	1	0	Middle	H	16.22	4.82	2.59	18.45
				V	16.12	4.82	2.59	18.35
	1	0	Highest	H	23.38	4.45	2.59	25.24
				V	16.60	4.45	2.59	18.46
Limit								**34.77**

Radiated Power (EIRP) for LTE Band 12 / 1.4M								
Modulation	RB		Channel	Antenna (H&V)	SG Level (dBm)	Antenna Factor (dBd)	Cable Loss (dB)	EIRP (dBm)
	Size	offset						
QPSK	1	0	Lowest	H	23.45	5.01	2.59	25.87
				V	19.74	5.01	2.59	22.16
	1	0	Middle	H	18.24	4.82	2.59	20.47
				V	17.71	4.82	2.59	19.94
	1	0	Highest	H	25.51	4.45	2.59	27.37
				V	18.27	4.45	2.59	20.13
16QAM	1	0	Lowest	H	17.95	5.01	2.59	20.37
				V	16.45	5.01	2.59	18.87
	1	0	Middle	H	18.11	4.82	2.59	20.34
				V	17.11	4.82	2.59	19.34
	1	0	Highest	H	18.20	4.45	2.59	20.06
				V	16.45	4.45	2.59	18.31
Limit								**34.77**

Radiated Power (EIRP) for LTE Band 12 / 3M								
Modulation	RB		Channel	Antenna (H&V)	SG Level (dBm)	Antenna Factor (dBd)	Cable Loss (dB)	EIRP (dBm)
	Size	offset						
QPSK	1	0	Lowest	H	20.62	5.01	2.59	23.04
				V	15.96	5.01	2.59	18.38
	1	0	Middle	H	22.61	4.82	2.59	24.84
				V	17.87	4.82	2.59	20.10
	1	0	Highest	H	21.32	4.45	2.59	23.18
				V	17.13	4.45	2.59	18.99
16QAM	1	0	Lowest	H	19.76	5.01	2.59	22.18
				V	15.88	5.01	2.59	18.30
	1	0	Middle	H	20.78	4.82	2.59	23.01
				V	16.10	4.82	2.59	18.33
	1	0	Highest	H	17.84	4.45	2.59	19.70
				V	17.00	4.45	2.59	18.86
Limit								**34.77**

Radiated Power (EIRP) for LTE Band 12 / 5M								
Modulation	RB		Channel	Antenna (H&V)	SG Level (dBm)	Antenna Factor (dBd)	Cable Loss (dB)	EIRP (dBm)
	Size	offset						
QPSK	1	0	Lowest	H	24.92	5.01	2.59	27.34
				V	20.78	5.01	2.59	23.20
	1	0	Middle	H	20.59	4.82	2.59	22.82
				V	19.94	4.82	2.59	22.17
	1	0	Highest	H	22.84	4.45	2.59	24.70
				V	18.19	4.45	2.59	20.05
16QAM	1	0	Lowest	H	19.34	5.01	2.59	21.76
				V	15.97	5.01	2.59	18.39
	1	0	Middle	H	18.84	4.82	2.59	21.07
				V	16.40	4.82	2.59	18.63
	1	0	Highest	H	17.48	4.45	2.59	19.34
				V	16.93	4.45	2.59	18.79
Limit								**34.77**

Radiated Power (EIRP) for LTE Band 12 / 10M								
Modulation	RB		Channel	Antenna (H&V)	SG Level (dBm)	Antenna Factor (dBd)	Cable Loss (dB)	EIRP (dBm)
	Size	offset						
QPSK	1	0	Lowest	H	23.09	5.01	2.59	25.51
				V	18.91	5.01	2.59	21.33
	1	0	Middle	H	24.64	4.82	2.59	26.87
				V	16.39	4.82	2.59	18.62
	1	0	Highest	H	23.00	4.45	2.59	24.86
				V	18.54	4.45	2.59	20.40
16QAM	1	0	Lowest	H	20.18	5.01	2.59	22.60
				V	18.28	5.01	2.59	20.70
	1	0	Middle	H	19.75	4.82	2.59	21.98
				V	16.29	4.82	2.59	18.52
	1	0	Highest	H	17.37	4.45	2.59	19.23
				V	17.27	4.45	2.59	19.13
Limit								**34.77**

Radiated Power (EIRP) for LTE Band 17 / 5M								
Modulation	RB		Channel	Antenna (H&V)	SG Level (dBm)	Antenna Factor (dBd)	Cable Loss (dB)	EIRP (dBm)
	Size	offset						
QPSK	1	0	Lowest	H	19.95	5.01	2.59	22.37
				V	17.86	5.01	2.59	20.28
	1	0	Middle	H	23.92	4.82	2.59	26.15
				V	17.61	4.82	2.59	19.84
	1	0	Highest	H	19.23	4.45	2.59	21.09
				V	22.12	4.45	2.59	23.98
16QAM	1	0	Lowest	H	18.63	5.01	2.59	21.05
				V	16.11	5.01	2.59	18.53
	1	0	Middle	H	18.64	4.82	2.59	20.87
				V	16.77	4.82	2.59	19.00
	1	0	Highest	H	16.78	4.45	2.59	18.64
				V	17.80	4.45	2.59	19.66
Limit								**34.77**

Radiated Power (EIRP) for LTE Band 17 / 10M								
Modulation	RB		Channel	Antenna (H&V)	SG Level (dBm)	Antenna Factor (dBd)	Cable Loss (dB)	EIRP (dBm)
	Size	offset						
QPSK	1	0	Lowest	H	23.10	5.01	2.59	25.52
				V	20.85	5.01	2.59	23.27
	1	0	Middle	H	22.71	4.82	2.59	24.94
				V	18.30	4.82	2.59	20.53
	1	0	Highest	H	23.79	4.45	2.59	25.65
				V	21.37	4.45	2.59	23.23
16QAM	1	0	Lowest	H	17.87	5.01	2.59	20.29
				V	16.77	5.01	2.59	19.19
	1	0	Middle	H	20.25	4.82	2.59	22.48
				V	15.85	4.82	2.59	18.08
	1	0	Highest	H	17.72	4.45	2.59	19.58
				V	16.71	4.45	2.59	18.57
Limit								**34.77**

Radiated Power (EIRP) for LTE Band 30 / 5M								
Modulation	RB		Channel	Antenna (H&V)	SG Level (dBm)	Antenna Factor (dBd)	Cable Loss (dB)	EIRP (dBm)
	Size	offset						
QPSK	1	0	Lowest	H	20.70	5.01	2.59	23.12
				V	17.59	5.01	2.59	20.01
	1	0	Middle	H	24.15	4.82	2.59	26.38
				V	18.55	4.82	2.59	20.78
	1	0	Highest	H	19.19	4.45	2.59	21.05
				V	21.04	4.45	2.59	22.90
16QAM	1	0	Lowest	H	18.11	5.01	2.59	20.53
				V	16.50	5.01	2.59	18.92
	1	0	Middle	H	20.65	4.82	2.59	22.88
				V	16.57	4.82	2.59	18.80
	1	0	Highest	H	18.60	4.45	2.59	20.46
				V	19.83	4.45	2.59	21.69
Limit								**34.77**

Radiated Power (EIRP) for LTE Band 30 / 10M								
Modulation	RB		Channel	Antenna (H&V)	SG Level (dBm)	Antenna Factor (dBd)	Cable Loss (dB)	EIRP (dBm)
	Size	offset						
QPSK	1	0	Lowest	H	22.86	5.01	2.59	25.28
				V	20.88	5.01	2.59	23.30
	1	0	Middle	H	21.70	4.82	2.59	23.93
				V	17.18	4.82	2.59	19.41
	1	0	Highest	H	24.50	4.45	2.59	26.36
				V	20.81	4.45	2.59	22.67
16QAM	1	0	Lowest	H	16.32	5.01	2.59	18.74
				V	17.69	5.01	2.59	20.11
	1	0	Middle	H	19.32	4.82	2.59	21.55
				V	16.44	4.82	2.59	18.67
	1	0	Highest	H	19.75	4.45	2.59	21.61
				V	16.23	4.45	2.59	18.09
Limit								**34.77**

Radiated Power (EIRP) for LTE Band 66 / 1.4M								
Modulation	RB		Channel	Antenna (H&V)	SG Level (dBm)	Antenna Factor (dBd)	Cable Loss (dB)	EIRP (dBm)
	Size	offset						
QPSK	1	0	Lowest	H	21.09	5.01	2.59	23.51
				V	19.17	5.01	2.59	21.59
	1	0	Middle	H	23.04	4.82	2.59	25.27
				V	18.91	4.82	2.59	21.14
	1	0	Highest	H	19.94	4.45	2.59	21.80
				V	21.58	4.45	2.59	23.44
16QAM	1	0	Lowest	H	16.86	5.01	2.59	19.28
				V	18.96	5.01	2.59	21.38
	1	0	Middle	H	20.42	4.82	2.59	22.65
				V	16.37	4.82	2.59	18.60
	1	0	Highest	H	17.49	4.45	2.59	19.35
				V	17.35	4.45	2.59	19.21
Limit								**30**

Radiated Power (EIRP) for LTE Band 66 / 3M								
Modulation	RB		Channel	Antenna (H&V)	SG Level (dBm)	Antenna Factor (dBd)	Cable Loss (dB)	EIRP (dBm)
	Size	offset						
QPSK	1	0	Lowest	H	22.40	5.01	2.59	24.82
				V	16.75	5.01	2.59	19.17
	1	0	Middle	H	20.00	4.82	2.59	22.23
				V	19.74	4.82	2.59	21.97
	1	0	Highest	H	25.04	4.45	2.59	26.90
				V	21.01	4.45	2.59	22.87
16QAM	1	0	Lowest	H	17.27	5.01	2.59	19.69
				V	16.24	5.01	2.59	18.66
	1	0	Middle	H	19.32	4.82	2.59	21.55
				V	17.26	4.82	2.59	19.49
	1	0	Highest	H	19.63	4.45	2.59	21.49
				V	18.67	4.45	2.59	20.53
Limit								**30**

Radiated Power (EIRP) for LTE Band 66 / 5M								
Modulation	RB		Channel	Antenna (H&V)	SG Level (dBm)	Antenna Factor (dBd)	Cable Loss (dB)	EIRP (dBm)
	Size	offset						
QPSK	1	0	Lowest	H	23.07	5.01	2.59	25.49
				V	17.96	5.01	2.59	20.38
	1	0	Middle	H	21.23	4.82	2.59	23.46
				V	17.04	4.82	2.59	19.27
	1	0	Highest	H	24.77	4.45	2.59	26.63
				V	19.81	4.45	2.59	21.67
16QAM	1	0	Lowest	H	19.69	5.01	2.59	22.11
				V	17.71	5.01	2.59	20.13
	1	0	Middle	H	20.22	4.82	2.59	22.45
				V	16.69	4.82	2.59	18.92
	1	0	Highest	H	17.54	4.45	2.59	19.40
				V	16.85	4.45	2.59	18.71
Limit								**30**

Radiated Power (EIRP) for LTE Band 66 / 10M								
Modulation	RB		Channel	Antenna (H&V)	SG Level (dBm)	Antenna Factor (dBd)	Cable Loss (dB)	EIRP (dBm)
	Size	offset						
QPSK	1	0	Lowest	H	23.45	5.01	2.59	25.87
				V	19.60	5.01	2.59	22.02
	1	0	Middle	H	24.95	4.82	2.59	27.18
				V	19.22	4.82	2.59	21.45
	1	0	Highest	H	22.49	4.45	2.59	24.35
				V	21.45	4.45	2.59	23.31
16QAM	1	0	Lowest	H	21.83	5.01	2.59	24.25
				V	15.88	5.01	2.59	18.30
	1	0	Middle	H	19.23	4.82	2.59	21.46
				V	15.99	4.82	2.59	18.22
	1	0	Highest	H	19.17	4.45	2.59	21.03
				V	18.29	4.45	2.59	20.15
Limit								**30**

Radiated Power (EIRP) for LTE Band 66 / 15M								
Modulation	RB		Channel	Antenna (H&V)	SG Level (dBm)	Antenna Factor (dBd)	Cable Loss (dB)	EIRP (dBm)
	Size	offset						
QPSK	1	0	Lowest	H	19.20	5.01	2.59	21.62
				V	18.66	5.01	2.59	21.08
	1	0	Middle	H	22.43	4.82	2.59	24.66
				V	18.57	4.82	2.59	20.80
	1	0	Highest	H	25.27	4.45	2.59	27.13
				V	18.41	4.45	2.59	20.27
16QAM	1	0	Lowest	H	17.71	5.01	2.59	20.13
				V	16.71	5.01	2.59	19.13
	1	0	Middle	H	20.79	4.82	2.59	23.02
				V	17.68	4.82	2.59	19.91
	1	0	Highest	H	23.41	4.45	2.59	25.27
				V	16.78	4.45	2.59	18.64
Limit								**30**

Radiated Power (EIRP) for LTE Band 66 / 20M								
Modulation	RB		Channel	Antenna (H&V)	SG Level (dBm)	Antenna Factor (dBd)	Cable Loss (dB)	EIRP (dBm)
	Size	offset						
QPSK	1	0	Lowest	H	21.58	5.01	2.59	24.00
				V	16.79	5.01	2.59	19.21
	1	0	Middle	H	22.65	4.82	2.59	24.88
				V	17.18	4.82	2.59	19.41
	1	0	Highest	H	24.43	4.45	2.59	26.29
				V	20.64	4.45	2.59	22.50
16QAM	1	0	Lowest	H	15.76	5.01	2.59	18.18
				V	15.74	5.01	2.59	18.16
	1	0	Middle	H	18.96	4.82	2.59	21.19
				V	17.14	4.82	2.59	19.37
	1	0	Highest	H	17.60	4.45	2.59	19.46
				V	17.97	4.45	2.59	19.83
Limit								**30**

Radiated Power (EIRP) for LTE Band 71 / 5M								
Modulation	RB		Channel	Antenna (H&V)	SG Level (dBm)	Antenna Factor (dBd)	Cable Loss (dB)	EIRP (dBm)
	Size	offset						
QPSK	1	0	Lowest	H	24.34	5.01	2.59	26.76
				V	19.52	5.01	2.59	21.94
	1	0	Middle	H	18.99	4.82	2.59	21.22
				V	21.98	4.82	2.59	24.21
	1	0	Highest	H	21.59	4.45	2.59	23.45
				V	21.45	4.45	2.59	23.31
16QAM	1	0	Lowest	H	16.54	5.01	2.59	18.96
				V	17.99	5.01	2.59	20.41
	1	0	Middle	H	18.84	4.82	2.59	21.07
				V	15.89	4.82	2.59	18.12
	1	0	Highest	H	19.33	4.45	2.59	21.19
				V	17.98	4.45	2.59	19.84
Limit								**33**

Radiated Power (EIRP) for LTE Band 71 / 10M								
Modulation	RB		Channel	Antenna (H&V)	SG Level (dBm)	Antenna Factor (dBd)	Cable Loss (dB)	EIRP (dBm)
	Size	offset						
QPSK	1	0	Lowest	H	20.29	5.01	2.59	22.71
				V	17.74	5.01	2.59	20.16
	1	0	Middle	H	19.06	4.82	2.59	21.29
				V	20.91	4.82	2.59	23.14
	1	0	Highest	H	21.83	4.45	2.59	23.69
				V	18.13	4.45	2.59	19.99
16QAM	1	0	Lowest	H	19.57	5.01	2.59	21.99
				V	15.75	5.01	2.59	18.17
	1	0	Middle	H	16.65	4.82	2.59	18.88
				V	16.43	4.82	2.59	18.66
	1	0	Highest	H	19.84	4.45	2.59	21.70
				V	16.18	4.45	2.59	18.04
Limit								**33**

Radiated Power (EIRP) for LTE Band 71 / 15M								
Modulation	RB		Channel	Antenna (H&V)	SG Level (dBm)	Antenna Factor (dBd)	Cable Loss (dB)	EIRP (dBm)
	Size	offset						
QPSK	1	0	Lowest	H	20.11	5.01	2.59	22.53
				V	17.47	5.01	2.59	19.89
	1	0	Middle	H	19.99	4.82	2.59	22.22
				V	19.97	4.82	2.59	22.20
	1	0	Highest	H	24.81	4.45	2.59	26.67
				V	21.24	4.45	2.59	23.10
16QAM	1	0	Lowest	H	18.13	5.01	2.59	20.55
				V	16.77	5.01	2.59	19.19
	1	0	Middle	H	18.34	4.82	2.59	20.57
				V	16.00	4.82	2.59	18.23
	1	0	Highest	H	21.50	4.45	2.59	23.36
				V	20.86	4.45	2.59	22.72
Limit								**33**

Radiated Power (EIRP) for LTE Band 71 / 20M								
Modulation	RB		Channel	Antenna (H&V)	SG Level (dBm)	Antenna Factor (dBd)	Cable Loss (dB)	EIRP (dBm)
	Size	offset						
QPSK	1	0	Lowest	H	23.75	5.01	2.59	26.17
				V	21.02	5.01	2.59	23.44
	1	0	Middle	H	24.95	4.82	2.59	27.18
				V	22.21	4.82	2.59	24.44
	1	0	Highest	H	21.82	4.45	2.59	23.68
				V	21.33	4.45	2.59	23.19
16QAM	1	0	Lowest	H	17.95	5.01	2.59	20.37
				V	15.72	5.01	2.59	18.14
	1	0	Middle	H	21.63	4.82	2.59	23.86
				V	21.50	4.82	2.59	23.73
	1	0	Highest	H	18.23	4.45	2.59	20.09
				V	16.28	4.45	2.59	18.14
Limit								**33**

ATTACHMENT B--RADIATED OUT BAND OF EMISSIONS

Measurement Data (worst case)

Test mode:	LTE BAND 2 20MHz (RB size 1 & RB offset 0) for QPSK						
Channel:	Middle						
Frequency (MHz)	Spurious Emission					Limit (dBm)	Result
	Polarization (H&V)	Read Level (dBm)	Antenna Correct Factor (dBi)	Cable Loss (dB)	Emission Level (dBm)		
7729.60	Horizontal	-57.73	14.94	6.12	-36.67	-13.00	Pass
10869.82	H	-68.07	13.87	7.86	-46.34		
7095.78	Vertical	-44.23	10.47	5.05	-28.71	-13.00	Pass
10818.62	V	-57.93	16.92	5.98	-35.03		

Remark: 1, The testing has been conformed to 10*1880MHz=18800MHz.
2, All other emissions more than 30 dB below the limit.
3, Emission Level= Read Level+ Antenna Correct Factor +Cable Loss

Test mode:	LTE BAND 4 20MHz (RB size 1 & RB offset 0) for QPSK						
Channel:	Middle						
Frequency (MHz)	Spurious Emission					Limit (dBm)	Result
	Polarization (H&V)	Read Level (dBm)	Antenna Correct Factor (dBi)	Cable Loss (dB)	Emission Level (dBm)		
7733.21	Horizontal	-53.97	14.94	6.12	-32.91	-13.00	Pass
10920.99	H	-63.02	13.87	7.86	-41.29		
6735.87	Vertical	-47.61	10.47	5.05	-32.09	-13.00	Pass
8474.17	V	-51.49	16.92	5.98	-28.59		

Remark: 1, The testing has been conformed to 10*1732.5MHz=17325MHz.
2, All other emissions more than 30 dB below the limit.
3, Emission Level= Read Level+ Antenna Correct Factor +Cable Loss

Test mode:	LTE BAND 5 10MHz (RB size 1 & RB offset 0) for QPSK						
Channel:	Middle						
Frequency (MHz)	Spurious Emission					Limit (dBm)	Result
	Polarization (H&V)	Read Level (dBm)	Antenna Correct Factor (dBi)	Cable Loss (dB)	Emission Level (dBm)		
7296.10	Horizontal	-55.89	14.94	6.12	-34.83	-13.00	Pass
8550.77	H	-62.96	13.87	7.86	-41.23		
6735.01	Vertical	-46.72	10.47	5.05	-31.20	-13.00	Pass
10306.91	V	-58.91	16.92	5.98	-36.01		

Remark: 1, The testing has been conformed to 10*836.5MHz=8365MHz.
2, All other emissions more than 30 dB below the limit.
3, Emission Level= Read Level+ Antenna Correct Factor +Cable Loss

Test mode:	LTE BAND 7 20MHz (RB size 1 & RB offset 0) for QPSK						
Channel:	Middle						
Frequency (MHz)	Spurious Emission					Limit (dBm)	Result
	Polarization (H&V)	Read Level (dBm)	Antenna Correct Factor (dBi)	Cable Loss (dB)	Emission Level (dBm)		
7143.67	Horizontal	-59.57	14.94	6.12	-38.51	-25.00	Pass
9514.54	H	-66.94	13.87	7.86	-45.21		
3599.32	Vertical	-46.94	10.47	5.05	-31.42	-25.00	Pass
4801.74	V	-54.64	16.92	5.98	-31.74		

Remark: 1, The testing has been conformed to 10*2535.0MHz=25350MHz.
2, All other emissions more than 30 dB below the limit.
3, Emission Level= Read Level+ Antenna Correct Factor +Cable Loss

Test mode:	LTE BAND 12 10MHz (RB size 1 & RB offset 0) for QPSK						
Channel:	Middle						
Frequency (MHz)	Spurious Emission					Limit (dBm)	Result
	Polarization (H&V)	Read Level (dBm)	Antenna Correct Factor (dBi)	Cable Loss (dB)	Emission Level (dBm)		
8447.80	Horizontal	-53.45	14.94	6.12	-32.39	-25.00	Pass
10867.18	H	-67.34	13.87	7.86	-45.61		
7041.75	Vertical	-48.84	10.47	5.05	-33.32	-25.00	Pass
10841.92	V	-56.62	16.92	5.98	-33.72		

Remark: 1, The testing has been conformed to 10*2535.0MHz=25350MHz.
2, All other emissions more than 30 dB below the limit.
3, Emission Level= Read Level+ Antenna Correct Factor +Cable Loss

Test mode:	LTE BAND 17 10MHz (RB size 1 & RB offset 0) for QPSK						
Channel:	Middle						
Frequency (MHz)	Spurious Emission					Limit (dBm)	Result
	Polarization (H&V)	Read Level (dBm)	Antenna Correct Factor (dBi)	Cable Loss (dB)	Emission Level (dBm)		
7913.02	Horizontal	-52.32	14.94	6.12	-31.26	-25.00	Pass
9490.90	H	-68.38	13.87	7.86	-46.65		
6128.35	Vertical	-41.18	10.47	5.05	-25.66	-25.00	Pass
11529.28	V	-58.71	16.92	5.98	-35.81		

Remark: 1, The testing has been conformed to 10*836.5MHz=8365MHz.
2, All other emissions more than 30 dB below the limit.
3, Emission Level= Read Level+ Antenna Correct Factor +Cable Loss

Test mode:	LTE BAND 30 10MHz (RB size 1 & RB offset 0) for QPSK						
Channel:	Middle						
Frequency (MHz)	Spurious Emission					Limit (dBm)	Result
	Polarization (H&V)	Read Level (dBm)	Antenna Correct Factor (dBi)	Cable Loss (dB)	Emission Level (dBm)		
6634.84	Horizontal	-53.19	14.94	6.12	-32.13	-25.00	Pass
9922.03	H	-68.59	13.87	7.86	-46.86		
7043.33	Vertical	-49.35	10.47	5.05	-33.83	-25.00	Pass
10945.68	V	-55.02	16.92	5.98	-32.12		

Remark: 1, The testing has been conformed to 10*2535.0MHz=25350MHz.
2, All other emissions more than 30 dB below the limit.
3, Emission Level= Read Level+ Antenna Correct Factor +Cable Loss

Test mode:	LTE BAND 66 20MHz (RB size 1 & RB offset 0) for QPSK						
Channel:	Middle						
Frequency (MHz)	Spurious Emission					Limit (dBm)	Result
	Polarization (H&V)	Read Level (dBm)	Antenna Correct Factor (dBi)	Cable Loss (dB)	Emission Level (dBm)		
7528.81	Horizontal	-56.64	14.94	6.12	-35.58	-13.00	Pass
9415.83	H	-63.43	13.87	7.86	-41.70		
7092.95	Vertical	-48.82	10.47	5.05	-33.30	-13.00	Pass
10893.39	V	-55.89	16.92	5.98	-32.99		

Remark: 1, The testing has been conformed to 10*836.5MHz=8365MHz.
2, All other emissions more than 30 dB below the limit.
3, Emission Level= Read Level+ Antenna Correct Factor +Cable Loss

Test mode:	**LTE BAND 71 20MHz (RB size 1 & RB offset 0) for QPSK**						
Channel:	**Middle**						
Frequency (MHz)	Spurious Emission					Limit (dBm)	Result
	Polarization (H&V)	Read Level (dBm)	Antenna Correct Factor (dBi)	Cable Loss (dB)	Emission Level (dBm)		
8445.91	Horizontal	-55.66	14.94	6.12	-34.60	-13.00	Pass
10895.85	H	-61.84	13.87	7.86	-40.11		
5643.85	Vertical	-48.63	10.47	5.05	-33.11	-13.00	Pass
10853.54	V	-56.55	16.92	5.98	-33.65		

Remark: 1, The testing has been conformed to 10*2535.0MHz=25350MHz.
2, All other emissions more than 30 dB below the limit.
3, Emission Level= Read Level+ Antenna Correct Factor +Cable Loss

------End of Report------