Product Use

Connect The Power Supply To Boot

Link the power supply, then press the key switch down, and the sound will enter the state of waiting for the distribution network and there will be a prompt voice.

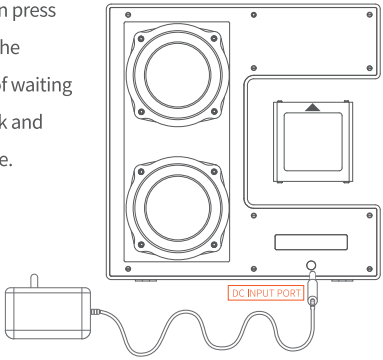

Bluetooth Link Description

Turn on bluetooth, the mobile phone searches for the device 'Floaters-TK' after the link is successful, the audio can play music synchronously
(Note: If the Bluetooth is not turned on after booting, the mobile phone will not be able to search for the device Floaters-TK)

Play Music

After the Bluetooth connection is successful, open the mobile phone music player, and the audio 05system is played synchronously.

Note: Bluetooth stops the connection when calling, only the mobile phone to answer!

Use Of Suspended Spheres

Suspension Positioning

1. Two-handed flat support square sphere, Put the silk-screen side up, (another The outer side is not magnetic)

2. Place the sphere slowly in the center position A distance of about 2 cm to the top Stop, feel the suspended magnetic force, slow Release the handle slowly and hang the sphere successfully Floating air

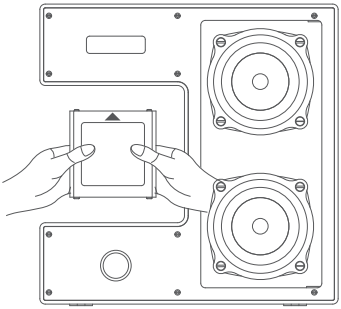

Protector

1. If you accidentally pull out the power cord Off, the suspended sphere will automatically go up Suction, to avoid falling off;

2. Note: Power insertion is required The source, the sphere to hove

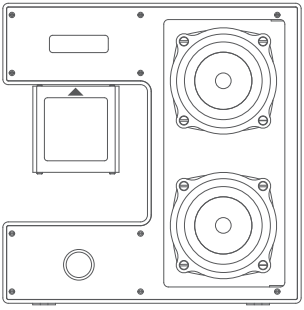

This device complies with part 15 of the FCC Rules. Operation is subject to the following two conditions: (1) This device may not cause harmful interference, and (2) this device must accept any interference received, including interference that may cause undesired operation.

Any Changes or modifications not expressly approved by the party responsible for compliance could void the user's authority to operate the equipment.

Note: This equipment has been tested and found to comply with the limits for a Class B digital device, pursuant to part 15 of the FCC Rules. These limits are designed to provide reasonable protection against harmful interference in a residential installation. This equipment generates uses and can radiate radio frequency energy and, if not installed and used in accordance with the instructions, may cause harmful interference to radio communications. However, there is no guarantee that interference will not occur in a particular installation. If this equipment does cause harmful interference to radio or television reception, which can be determined by turning the equipment off and on, the user is encouraged to try to correct the interference by one or more of the following measures:
-Reorient or relocate the receiving antenna.
-Increase the separation between the equipment and receiver.
-Connect the equipment into an outlet on a circuit different from that to which the receiver is connected.
-Consult the dealer or an experienced radio/TV technician for help.

RF warning for Portable device: The device has been evaluated to meet general RF exposure requirement. The device can be used in portable exposure condition without restriction.