60.00

80.00

betron®

TG30

USER GUIDE

CONTENTS

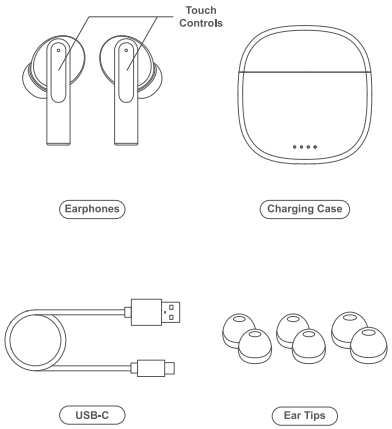

CHARGING

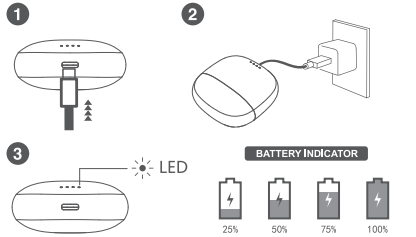

PAIRING

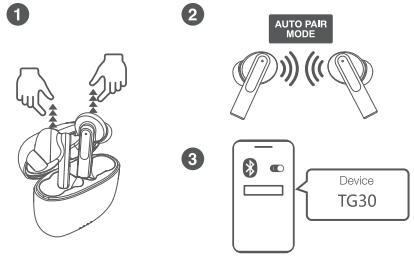

fornt

RESET

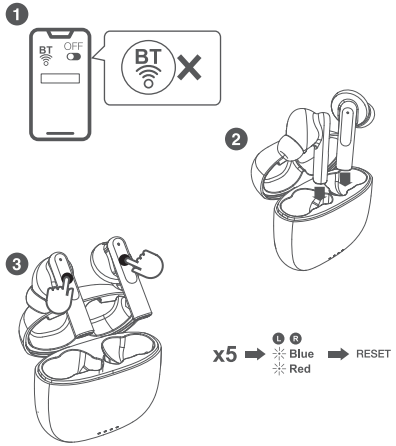

TOUCH CONTROLS

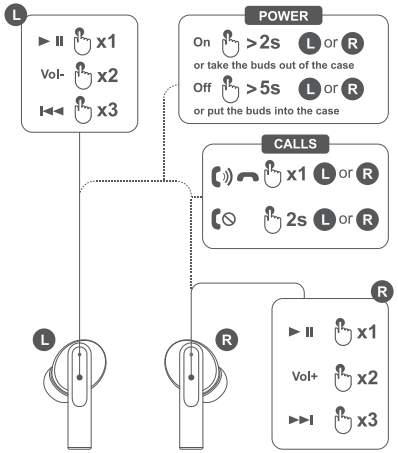

WARNING

DO NOT use alcohol, paint thinners, detergent, shampoo, or other solvents for cleaning purposes.
DO NOT intentionally immerse the earphones under water.
DO NOT wash the earphones in washing machine.
DO NOT expose the product to extremely high or low temperatures.
DO NOT leave the product near candles, cooking burners and open flames.
DO NOT disassemble the product in any way to avoid electric shock.
Only charge the battery in accordance to the instructions provided by the company.
DO NOT wash the charging box.

CAUTION

RISK OF EXPLOSION INCREASES IF BATTERY IS REPLACED BY AN INCORRECT TYPE.
DISPOSE USED BATTERIES ACCORDING TO THE INSTRUCTIONS.

INSTRUCTIONS

DO NOT DISCARD THE USED BATTERIES ALONG WITH HOUSEHOLD WASTE.
DISPOSAL OF BATTERY SHOULD COMPLY WITH LOCAL ENVIRONMENTAL REGULATIONS.

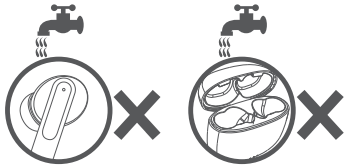

BT Version: V5.2
Profile: HFP, A2DP, AVRCP
Codec: SBC, AAC
Range: 10 meters (33 feet)
Charging time (Full charge): Approx. 1.5 hours
Playtime: Up to 15 hours
(varies by volume and content)
Standby time: Up to 3 months
Dimensions: 65W x 60H x 25L (mm)
Weight: 43g

back

This device complies with Part 15 of the FCC rules. Operation is subject to the following two conditions: 1) this device may not cause harmful interference, and 2) this device must accept any interference received, including interference that may cause undesired operation.

This equipment has been tested and found to comply with the limits for a Class B digital device, pursuant to Part 15 of the FCC rules. These limits are designed to provide reasonable protection against harmful interference in a residential installation. This equipment generates, uses and can radiate radio frequency energy and if not installed and used in accordance with the instructions, may cause harmful interference to radio communications. However, there is no guarantee that interference will not occur in a particular installation. If this equipment does cause harmful interference to radio or television reception, which can be determined by turning the equipment off and on, the user is encouraged to try correct the interference by one or more of the following measures:

Reorient the receiving antenna.

Increase the separation between the equipment and receiver.

Connect the equipment into and outlet on a circuit different from that to which the receiver is connected.

Consult the dealer or an experienced radio/TV technician for help.

Changes or modifications not expressly approved by the party responsible for compliance could void your authority to operate the equipment.

FCC ID:2BBUX-TG30B