VANPOWERS

GRANDTETON

USER MANUAL

Dear customer,

Vanpowers is a team of passionate bicycle enthusiasts dedicated to clean, green commuting and sustainable e-bike solutions.

We aim to provide top-quality e-bikes, honest purchasing guidance, and outstanding customer service. Our mission is to transform the way we work, travel, and make a positive environmental impact.

Thank you for choosing Vanpowers as we move towards a cleaner, greener future.

- Vanpowers Team

VANPOWERS

Your Companion in Proficient Pedaling

GRANDTETON

Vanpowers USA

5521 Schaefer Ave, Chino, CA 91710

vanpowers.com
service@vanpowers.com
+1 (437) 440 8778

Instruction

Thank you for becoming the owner of a Vanpowers e-bike. Before you take your beloved e-bike to the streets and alleys, we warmly remind you to prioritize riding safety. Your riding safety depends on many factors: familiarity and mastery of the e-bike, e-bike maintenance, riding conditions, and etc. Any e-bike or other mode of transportation carries inherent risks that cannot be predicted or avoided, and these risks are the responsibility of the rider. Any e-bike or other mode of transportation carries inherent risks that cannot be predicted or avoided, and these risks are the responsibility of the rider. Since it is impossible to control or predict every situation that may occur during riding, this manual does not make any statements regarding the safe use of the e-bike. However, this manual contains crucial information on how to safely operate and maintain your Vanpowers e-bike and its accessories. Before use, please read and familiarize yourself with your e-bike. Pay special attention to safety precautions to ensure safe and proper usage of the e-bike. This manual includes warnings and precautions related to safe operation, as well as consequences that may arise from incorrect settings, operation, or maintenance. Please read all the information in this manual carefully, and if you have any questions, please contact us immediately.

Keep this manual and any other documents included with the e-bike for future reference. Additionally, please note that any changes or revocations of the contents in this manual will not be separately notified.

The images in this manual are for reference only, please refer to the actual product.This

user manual applies to the following SKU models : HDAK00002 (HVIN:HDAK02).

CONTENTS.

SAFETY WARNINGS 06

FIT 11

TROUBLESHOOTING 17

DISPLAY INSTRUCTION 19

BATTERY CHARGING & REMOVAL 27

CARE & MAINTENANCE 32

LIMITED WARRANTY 37

SAFETY WARNINGS.

01

Safety Warnings

General Warnings

Riding Environment

Notes On Road Use

FCC/IC Warning Statements

Safety Warnings

⚠ WARNING!

Please carefully read the user manual and safety warnings before using your e-bike and ensure that you understand and accept all associ ated risks. Any loss or damage caused by improper use is the responsibility of the user.

INSTRUCTIONS PERTAINING TO RISK OF FIRE or ELECTRIC SHOCK
IMPORTANT SAFETY INSTRUCTIONS

WARNING –

a) Read all the instructions before using the product. When using this product, basic precautions should always be followed, including the following:
b) To reduce the risk of injury, close supervision is necessary when the product is used near children.
c) Do not put fingers or hands into the product.
d) Do not use this product if the flexible power cord or output cable is frayed, has broken insulation, or any other signs of damage.
e) This equipment is not intended to be used at ambient temperatures less than -20°C (-4°F) or above ambient temperatures of 45°C (113°F).
f) The battery is intended to be charged when the ambient temperature is between 0°C (32°F) and 40°C (104°F). Never charge the battery when ambient temperatures are outside this range. When cleaning this product, remove the battery from the product before cleaning.

SAVE THESE INSTRUCTIONS

General Warnings

This e-bike is designed for riders aged 16 to 65. Children should operate and ride the e-bike with adult supervision .

Please ensure that the e-bike and its components are not accessible to children under 3 years old.

The Frame Label on your e-bike will identify the Max Gross Vehicle Weight of your e-bike. The Max Gross Vehicle Weight for this e-bike is 400 lbs (180 kg), and the maximum weight capacity for the front rack is 33 lbs (15 kg), the maximum weight capacity for the rear rack is 55 lbs (25 kg).The calculation method for Max Gross Vehicle Weight is as follows: e-bike weight + rider weight + luggage/backpack weight = Max Gross Vehicle Weight. If you have any questions about the Max Gross Vehicle Weight, please contact Vanpowers for assistance.

As with all products with mechanical components, EPACs are subject to wear and high stress. Different materials and components may react to wear and stress fatigue in different ways. If the recommended lifespan of a component has been exceeded, it may suddenly fail, possibly causing injury. Any cracks, scratches, or changes in coloring in high-stress areas indicate that the lifespan of the components in those has been exceeded and they should be replaced.

When replacing parts, be sure to use genuine replacement parts provided by the Vanpowers. Using non-Vanpowers parts may cause malfunctions that can seriously affect your ride safety. Vanpowers is not responsible for any damages incurred due to the rider’ s decision to use non-Vanpowers replacement parts.

Without the guidance of the Vanpowers Service Center, do not attempt to disassemble, modify, repair, or

replace any parts of the product or equipment, as this will void the warranty and may result in malfunctions and/orinjuries. DO NOT modify the product's circuits.
Inappropriate modifications to the e-bike or its accessories can cause malfunctions. In order to reduce the risk of accidents and injuries, do not install any additional accessories that have not been purchased from or authorized by the seller, including but not limited to child safety seats and trailers.

Surface clean the product only.

Riding Environment

We recommend avoiding riding in wet weather, especially in damp, salty, corrosive, or dusty environments.
Avoid riding in severe weather and low-visibility conditions, such as dawn, dusk, darkness, or fog, to reduce the risk of accidents.
Do not use the product to ride in heavy rain or through streams, and do not immerse or submerge it in water or other liquids, as this may cause damage to the electrical system.
When riding on slippery roads, reduce your speed and brake in advance to ensure that the e-bike can stop safely.
Install reflectors and make sure they are clean, securely fastened, and unobstructed.
When riding at night, use lights and reflectors properly to ensure that others can see you.
Please note that insufficient lighting measures can lead to serious injury or death.

Notes On Road Use

This product is suitable for riding on the following paths:
Asphalt roads and e-bike lanes; Roads made of gravel, sand, or similar materials (such as gravel roads and dirt tracks); Both paved and unpaved hiking trails, which may have a few roots, thresholds, rocks, and drops.
To ride the e-bike safely on the road, it is necessary to understand and comply with the safety regulations of your country or region.
Cross train tracks at a 90-degree angle, or walk your e-bike across to prevent the wheels from getting stuck.
To reduce the risk of injury, always wear your helmet correctly (covering the forehead) and fasten the safety buckle correctly under your chin.
You are responsible for equipping yourself and your e-bike with appropriate equipment (such as reflectors and lights) in accordance with local legal requirements.
Do not ride the e-bike in a dangerous manner. Make sure you can control the e-bike and do not attempt dangerous actions, including but not limited to hands-free riding, jumps, and wheelies.

FCC/IC Warning Statements

Changes or modifications not expressly approved by the party responsible for compliance could void the user' s authority to operate the equipment. This equipment has been tested and found to comply with the limits for a Class B digital device, pursuant to Part 15 of the FCC Rules. These limits are designed to provide reasonable protection against harmful interference in a residential installation. This equipment generates uses and can radiate radio frequency energy and, if not installed and used in accordance with the instructions, may cause harmful interference to radio communications. However, there is no guarantee that interference will not occur in a particular installation. If this equipment does cause harmful interference to radio or television reception, which can be determined by turning the equipment off and on, the user is encouraged to try to correct the interference by one or more of the following measures:

——Reorient or relocate the receiving antenna.

——Increase the separation between the equipment and receiver.

——Connect the equipment into an outlet on a circuit different from that to which the receiver is connected.

——Consult the dealer or an experienced radio/TV technician for help.

This device complies with Part 15 of the FCC Rules/Industry Canada license-exempt RSS standard(s). Operation is subject to the following two conditions:

(1)This device may not cause harmful interference, and

(2)This device must accept any interference received, including interference that may cause undesired operation.

CetappareilestconformeauxCNRexemptesdelicenced'IndustrieCanada.

Sonfonctionnementestsoumisauxdeuxconditionssuivantes:

(1)Cedispositifnepeutcauserd'interférences;et

(2)Cedispositifdoitacceptertouteinterférence,ycomprislesinterférences quipeuventcauserunmauvaisfonctionnementdel'

appareil.

This Class B digital apparatus complies with Canadian ICES-003.

Under Industry Canada regulations, this radio transmitter may only operate using an antenna of a type and maximum (or lesser) gain approved for the transmitter by Industry Canada. To reduce potential radio interference to other users, the antenna type and its gain should be so chosen that the equivalent isotropically radiated power (e.i.r.p.) is not more than that necessary for successful communication.

This device complies with Canadian ICES-003 and RSS-247.

FCC/IC Warning Statements

ISED Canada Statement:

This device contains licence-exempt transmitter(s)/receiver(s) that comply with Innovation, Science and Economic Development Canada' s licence-exempt RSS(s)/ RSS Gen of the Canada Rules. Operation is subject to the following two conditions: (1) This device may not cause interference. (2) This device must accept any interference, including interference that may cause undesired operation of the device.

Radiation Exposure: This equipment complies with Canada radiation exposure limits set forth for an uncontrolled environment.

FCC/IC Radiation Exposure Statement

The device has been evaluated to meet general RF exposure requirement. The device can be used in portable exposure conditions without restriction.

L'appareilaétéévaluépourrépondreauxexigencesgénéralesd'exposition

auxRF.

L'appareilpeut êtreutilisésansrestrictiondansdesconditionsd'exposition

portables.

FIT

02

Fit

Having the right fit is crucial for ensuring safety, performance, and comfort while cycling. Achieving the appropriate fit for your body and riding conditions necessitates expertise, proficiency, and specialized equipment. It is highly recommended to have your bicycle adjustments made by a professional dealer. However, if you possess the necessary experience, skillset, and tools, it is advisable to have your dealer assess your work before embarking on a ride.

⚠ WARNING! If your bicycle does not fit properly, you may lose control and fall.

Seatpost Height

Use a 5mm Allen key to loosen the seat post clamp, then adjust the seat to the desired height, and tighten it back using the recommended torque value.

NOTICE!

Keep the saddle aligned with the direction of the wheels in a straight line.

Do not exceed the minimum insertion depth marked on the seat post.

Dropper Seatpost (GrandTeton Ultra Model Only)

Your e-bike is equipped with a height-adjustable seat post. The dropper seatpost allows you to flexibly adjust the height of the saddle while riding. This adjustment is highly practical, whether for climbing (requiring a higher seat) or descending (requiring a lower seat). When you leave the seat and press the lever, the seat will rise until it stops underweight. When you release the lever the seat will be fixed at the current height position. If you sit on the seat and press the lever your weight will cause the seat's height to decrease until the lever is released.

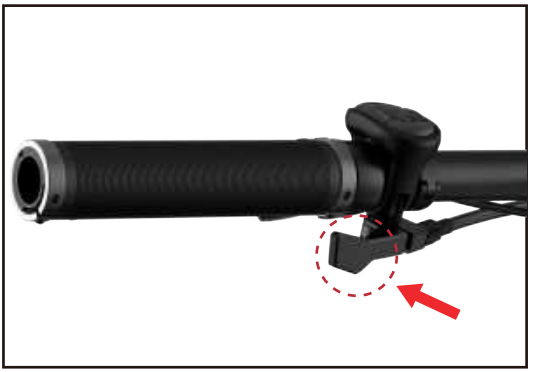

Saddle Position and Angle

Adjusting the saddle to the correct position is key to achieving optimal performance and comfort.
Loosen the fixing screw located under the saddle, then move the saddle position horizontally forward or backward, and adjust the tilt angle up or down to the appropriate position. After adjusting, tighten the angle adjustment screw ② followed by the fixing screw ①.
The saddle tilt must be adjusted to prevent your weight being supported on the handlebars. The optimum saddle position is horizontal.

NOTICE!

Do not exceed the limit marks on the saddle rails, which indicate the allowed minimum and maximum horizontal positions.

Handlebar Position

Stand in front of the e-bike, gripping the front wheel with your legs, and check that the stem is aligned with the front wheel, and that the handlebar angle is perpendicular to the front wheel. Ensure that the stem clamp bolts are tightened to prevent free rotation between the stem and the front wheel.

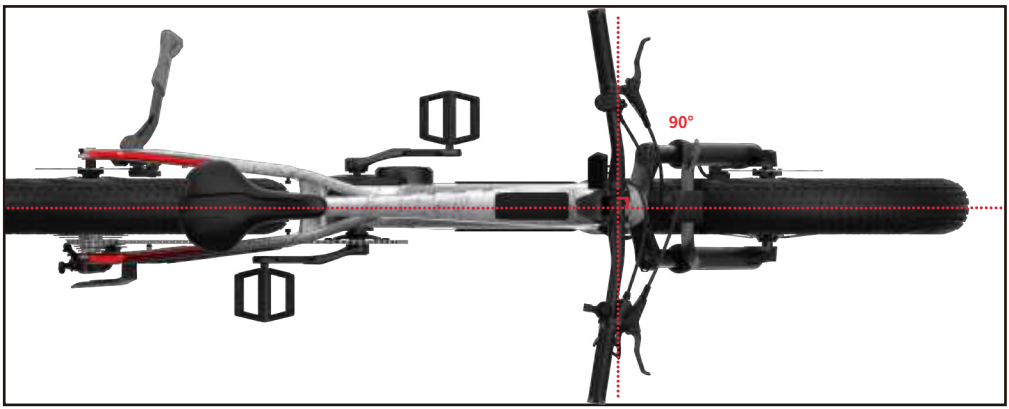

Suspension Fork

The suspension fork can move up and down to absorb bumps on the road, making the ride smoother and more comfortable on rough terrain or trails. Locking the suspension fork to function as a rigid fork can increase pedaling efficiency.
The right side of the suspension fork features a lock/unlock adjusting knob. To engage or disengage the suspension fork, follow these steps:
To fully lock: Turn the knob on the suspension fork clockwise until it stops.
To unlock: Turn the knob counterclockwise until it stops.

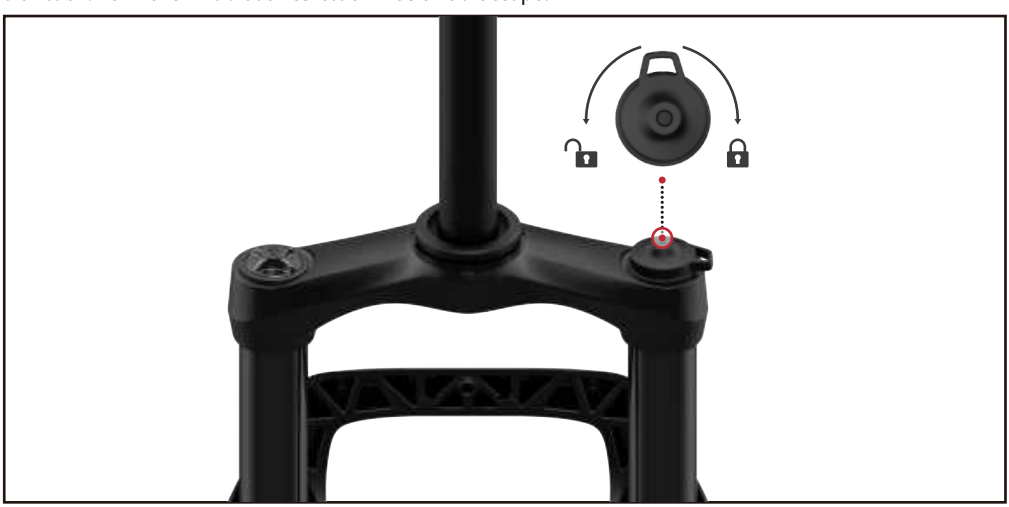

Changing Gears

NOTICE!

The e-bike should only be shifted while in motion; Do not shift gears when it is stationary.
Check the e-bike's gear-shifting function. The numbers on the gear shifter on the right side of the handlebar indicate the number of gear speeds the e-bike has. These numbers correspond to the rear derailleur's cogset, with the cogs arranged from largest to smallest corresponding to gear positions 1-9 on the shifter.

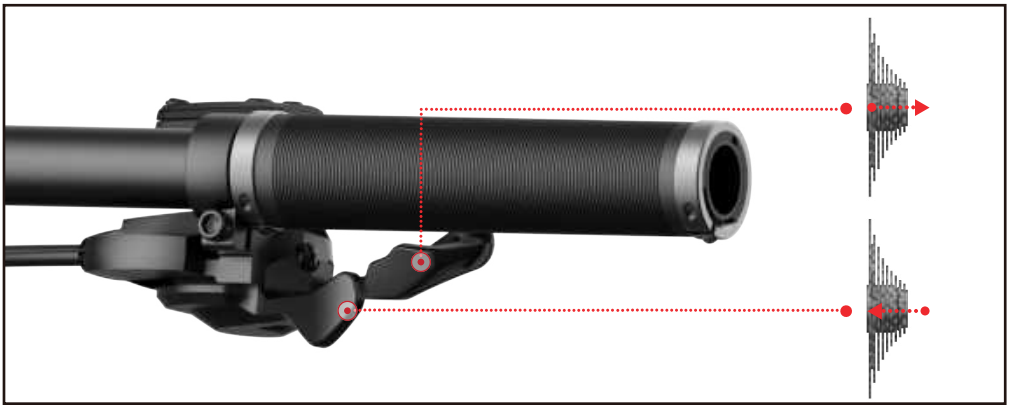

How to Choose the Right Gear?

For climbing steep hills, use the smallest chainring in combination with the largest cog. For maximum speed, adopt the combination of the largest chainring and the smallest cog. There's no need to shift gears in sequence. Find a comfortable starting gear level one that allows you to start easily without wobbling. Try shifting up and down to feel the response of different gear combinations in terms of speed and pedaling effort. First practice shifting in a safe area free of obstacles, danger, and traffic until you can shift gears smoothly. Learn to anticipate your gear changes, shifting to a lower gear before starting to climb a steep hill. If you have problems with shifting, mechanical adjustments may be needed. Please seek assistance from a professional if needed.

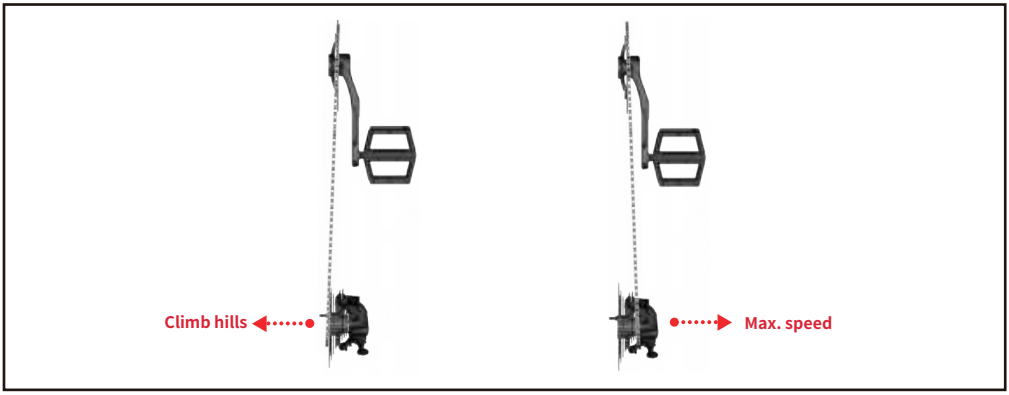

Brake

Loosen the brake lever fixing screw, adjust the brake lever angle to a slight downward tilt, and then retighten it to the recommended torque value. When adjusting the handlebar, make sure that the brake lever does not touch the grip during braking.
As for the brake orientation, "The left brake lever operates the front brake, the right brake lever operates the rear brake".

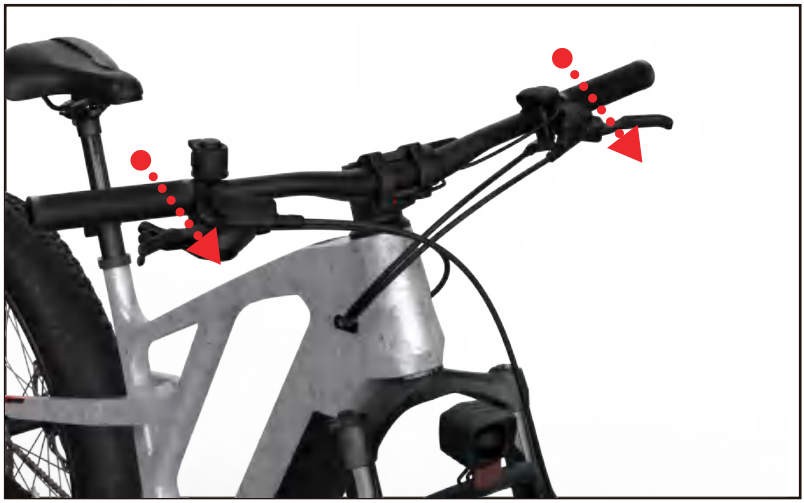

Pre-Ride Safety Check

Tire Pressure Check: After the e-bike is assembled, check the tire pressure of both the front and rear tires. Before the first use, inflate the front and rear tires to the recommended pressure value of 15-20 PSI.
Brake Check: Inspect the brake system to ensure that both the front and rear brakes are functioning properly.
Handlebar Check: Grip the left and right handlebar grips with your hands and twist them forcefully while keeping the e-bike stationary. Check whether the handlebars are securely fastened and whether there is any looseness in the grips. If the handlebars or grips are loose, readjust and tighten the fixing screws. Then, check each component installed on the handlebar, such as the display, buttons, gears, and brakes, to ensure they are all securely fixed in place.
E-bike Power-Up and Start: Before the first use, make sure to fully charge the battery. Before riding, ensure that the battery is correctly locked onto the frame. For operations related to the battery and check of its power level, refer to the battery operation section.
To turn on the e-bike, long-press the "Power" button on the display control panel. When you need to turn off the e-bike, long-press the "Power" button on the control panel again. For operations and settings related to the display panel, please refer to the display panel instructions section.

TROUBLESHOOTING

03

Troubleshooting

After assembling and tuning the e-bike according to the above steps, if you encounter any issues during use, you can troubleshoot and resolve the problem using the following suggestions. If the problem persists even after following these recommendations, please contact our support staff for assistance.

Problems	Description of Problems	Suggested Solutions
The display fails to be powered on.	After the e-bike is assembled and the battery is installed, the display screen does not light up when the power button is long-pressed.	First, remove the battery to check if it has power. Check the color of the indicator light on top of the battery; a red light indicates the battery is out of power, while a green light indicates the battery is charged. After checking the power indicator, replace the battery of the e-bike. Long press the power button on the display to ensure the display can turn on and the e-bike can be used normally. If the problem with powering on the display can not be solved with the above steps, please immediately contact Vanpowers Service Center or visit your nearest store for technical support.
The motor fails to work after the display is powered on.	The e-bike's display turns on after the display is powered normally, but the motor does not operate or provide assistance.	First, check the power gear number on the display. If the e-bike is in the "N" (Neutral) gear, you can switch the gear and obtain corresponding motor assistance by pressing the "+" button. If the display shows a red fault code, indicating a fault in the display or motor, please immediately contact Vanpowers Service Center or visit your nearest store for technical support.
The battery can not be charged.	The e-bike's battery cannot be correctly charged or powered on.	If you are charging outdoors in cold winter conditions, the battery's low-temperature protection may affect its charging capability. It is recommended to bring the battery into a warm indoor environment to restore its charging function under room temperature. If you are unable to charge the battery indoors or in a warm outdoor environment, it might be due to the battery being in an overcharged or overly depleted state. First, unplug the charger, then briefly press the battery indicator light button to turn the power off and on again, allowing the battery to return to normal before attempting to charge again. If your battery has not been used for an extended period (over three months), plug in the charging connector and then briefly press the indicator light button to turn the battery on again after a while, allowing the battery to return to normal before charging. If the battery charging problems can not be solved with above steps, please immediately contact Vanpowers Service Center or visit your nearest store for technical support.

DISPLAY INSTRUCTION

04

Control Button Functions

Display Interface Introduction

Menu Interface Settings

Error Codes

Control Button Functions

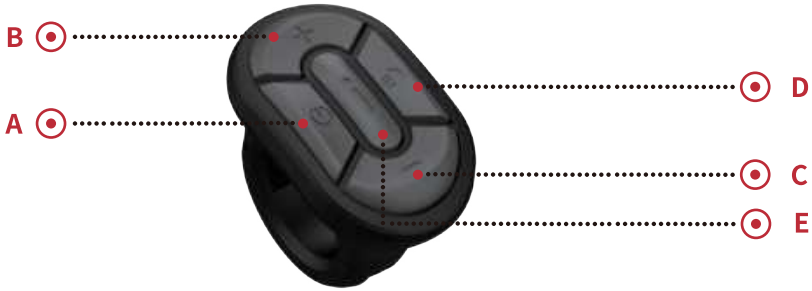

No.	Description	Short press	Long press and hold for 3 seconds
A	"Power" button		Long press to control power on/off
B	"+" button	Short press to increase assistance level	
C	"-" button	Short press to decrease assistance level	Long press to enter walk assist mode
D	"Light" button	Short press to toggle front light between low beam/high beam	Long press to turn on/off the front light/tail light
E	"i" button	Short press to switch pages	Long press to enter menu page

*Note: The display defaults to the OFF mode when the e-bike is powered on. In this mode, the motor does not operate, and you need to switch to any other gear to enter the assist mode.

Display Interface Introduction

After long pressing the "Power" button to turn on the display, it enters the main page. The data displayed on the main page is described as follows:

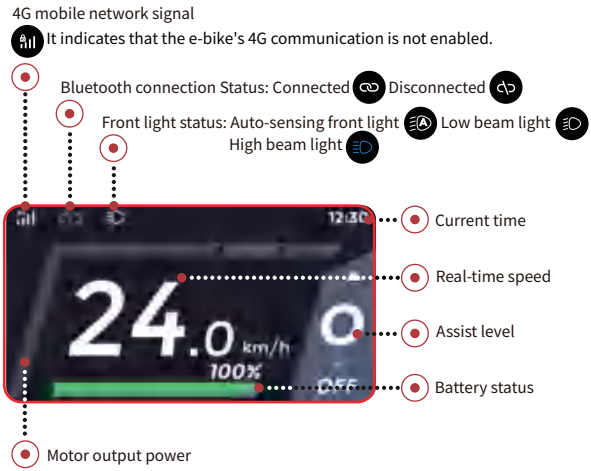

Display Interface Introduction

OFF ECO SPORT BOOST WALK ASSIST

Single riding distance

Total riding distance

Riding time

Estimated remaining rideable distance

Average riding speed

Maximum riding speed

Energy consumed during ride

Average riding power

Type-C Charging Port

There is a 5V 1A Type-C charging port at the bottom of the display that you can use to charge your mobile device. The Type-C port' s output is very low, so the connected device' s charging time may be higher than usual.

Type-C Interface

Display Interface Introduction

To ensure user safety, access to the menu interface is only possible when the e-bike is stationary (with a speed of 0). In the display interface, long press the "i" button to enter the menu interface. The method of operation in the menu interface is as follows in the table below.

No.	Description	Function	
"i" button	Long press	Enter/exit menu interface	
"i" button	Short press	Enter the selected menu item	Confirm after changing values, return to menu item selection
"+" button	Short press	Cursor up to switch menu items	Increase value of parameter item
"-" button	Short press	Cursor down to switch menu items	Decrease value of parameter item

Here are introductions to the functions of these menu items:
01. Clear Trip Mileage: Selecting this option will reset data such as single ride distance, maximum speed, average speed, ride time calories, and average power to zero.

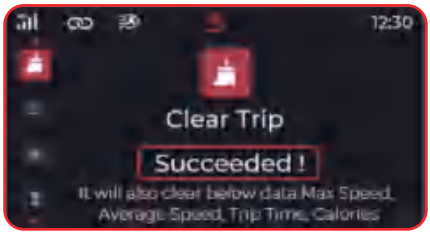

02.Unit Setting: Kilometers (km) and miles are optional.

03.Display Backlight Adjustment: The brightness level can be adjusted between 1 and 5. Level 5 is the brightest, while level 1 is the dimmest; The Auto option indicates automatic adjustment of backlight brightness according to ambient light conditions.

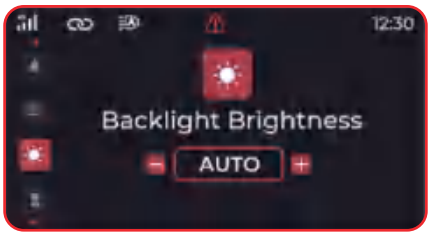

04.Auto Power-Off Time Setting: Options include OFF, 5, 10, 15, 20, 25, 30 minutes. OFF means the auto power-off function is disabled.

05.Front Light Sensor Switch: When in the ON state, the display will detect external ambient light brightness and automatically turn the front light (low beam mode) on or off.

06.Time Setting: Adjust the current time displayed on the screen. The hour value ranges from 00 to 23, and the minute value ranges from 0 to 59.

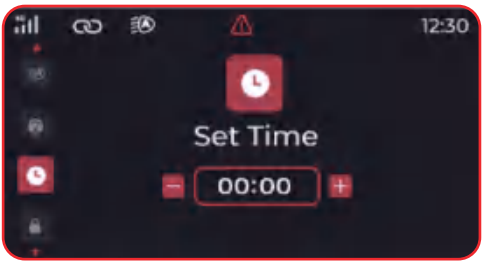

07.Startup Password: You can choose to enable or disable the startup password setting. If enabled, a 4-digit numerical password can be set.

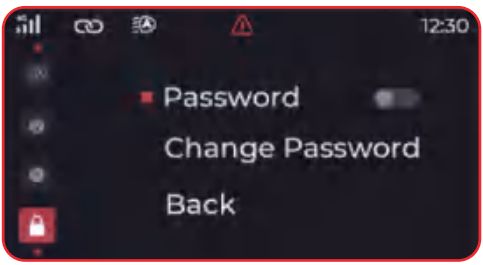

08.Connected to Vanpowers App: Use your phone to open the Vanlife App and scan the QR code for binding with the e-bike.

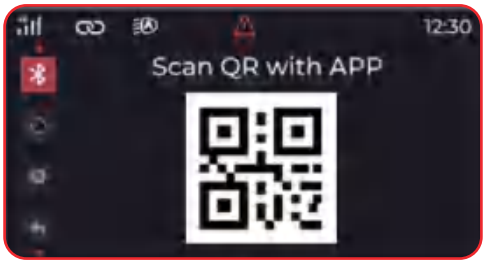

09.Reset: Selecting this option will restore all data and settings on the display to their initial default values.

10. Display Version: Enter to view the version No. of the display.

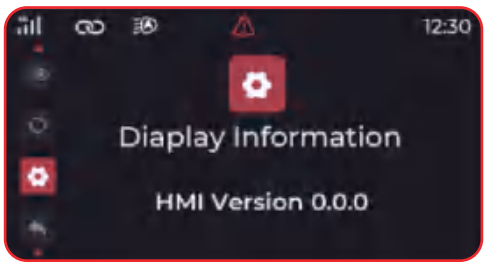

11.Exit Menu Page: After entering this option, press the "j" button briefly to confirm and return to the main page of the display.

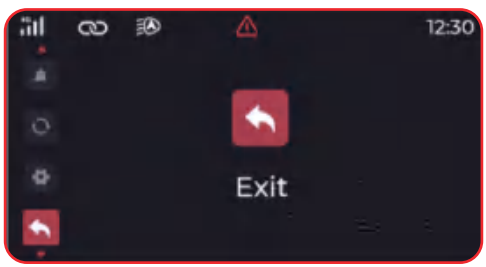

Error Codes

Your e-bike is equipped with a fault detection system integrated into the display and controller. In the event of a malfunction in the electrical control system, the display will show fault codes. Below are the most common fault codes, which can assist in troubleshooting. If a fault code is displayed on your e-bike at any time, it is recommended to immediately stop operating it and contact Vanpowers for assistance.
The following types of faults are corresponding to the GrandTeton Ultra model:

Fault code	Fault description
03	Controller hall fault
04	Brake fault
05	Controller temperature fault
06	Motor temperature fault
08	Controller communication fault
09	Controller overvoltage or undervoltage
30	Display communication fault
36	Torque sensor fault
38	Temperature sensor fault
53	Battery charging at too low temperature
54	Battery charging at too high temperature
58	Battery discharging at too high temperature
59	Battery discharging at too low temperature

The following types of faults are corresponding to the GrandTeton Pro model:

Fault code	Fault description
01	Overcurrent of controller
02	Battery over-voltage
03	Controller undervoltage
04	The controller temperature too high
09	Motor temperature too high
0A	Motor stalling
0C	Power cut-off brake lever fault
0D	Throttle fault
0E	Torque sensor fault
0F	Motor hall fault
5C	Battery short circuit
55	Battery charging at too high temperature
56	Battery charging at too low temperature
57	Battery discharging at too high temperature
58	Battery discharging at too low temperature

Battery Charging & Removal

•Battery Information•

•Battery Indicator Light Status•

•Take Out The Battery•

•Install Battery•

•Two Charging Mode•

•Charger Safety iInformation•

•Battery Safety Information•

05

Battery Information

Before performing any operations on the battery, please familiarize yourself with all components of the battery and the charger.

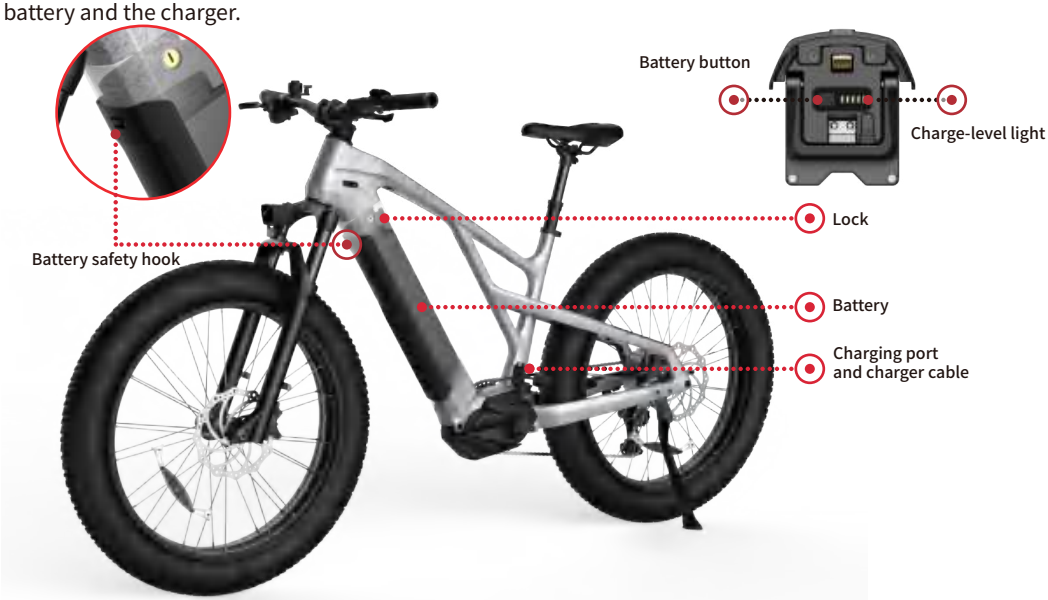

Battery Indicator Light Status

After a short press of the battery button, the battery level indicators light up progressively from low to high up to the current charge level, and then turn off after displaying for 5 seconds. The battery level indicators are explained as follows:

Below 20%: Solid red light
20%-40%: Two solid green lights
40%-60%: Three solid green lights
60%-80%: Four solid green lights
80%-100%: Five solid green lights

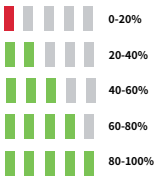

Take Out The Battery

To store, transport, for safety, or as a charging option, the battery can be removed. To remove the battery, please follow these steps:

01 Insert the key into the keyhole and turn it 90° counterclockwise to the unlocking position.
02 After unlocking the battery, push the battery safety hook downward at the same time.
03 Carefully pick up the battery, tilting it away from the base contacts.
04 Pull the battery out of the base. When removing the battery from the e-bike, use both hands to avoid dropping and damaging the battery. Do not touch or bend terminal contacts.

Install Battery

Check to make sure the battery holder is clean and dry, then follow the steps below.

01 Make sure the key is inserted into the frame and kept open.

02 Slowly push the battery along the frame until the battery is aligned with the terminal contacts.

03 Keep the battery safety hook unlocked and push up the upper part of the battery (make sure you push it hard enough) to ensure that the battery is installed in place.

Two Battery Charging Methods

Always charge the battery at temperatures between 32 °F - 104 °F (0 °C - 40 °C) and make sure the battery and charger are not damaged before charging. If you notice anything unusual while charging, please stop charging and using the e-bike and contact Vanpowers for assistance.
When charging the battery, you have two ways: charging with the battery on the e-bike or charging the battery separately. You can choose the charging method that suits you according to your needs and scenarios. The specific steps are as follows:

A. Charging with the battery on the e-bike
01 The charging port is located on the left side of the bottom of the riser. When charging, first open the rubber plug of the charging port.
02 Insert the charger output charging cable into the battery charging port.
03 Connect the input plug of the charger to a standard AC household AC power outlet (110-240V 50/60 Hz). After charging starts, the LED charging status light on the charger will light up red.
04 Connect the charger, and the indicator light will light up progressively from low to high to the current battery level. The indicator light will flash under the current battery level and stay on during charging. Remove the charger, and all the indicator lights will stay on for 3 seconds under the current battery level and then go out.
05 When fully charged, the charger indicator light will turn green. After charging, first unplug the power cord from the wall socket, then unplug the charging cord from the battery charging port, and finally put the rubber plug back to its original position.

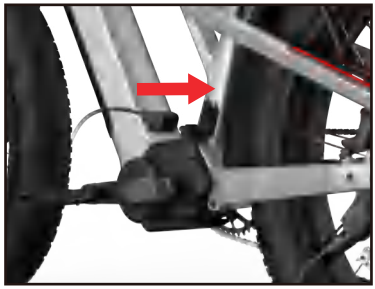

B. You can also remove the battery from the frame and charge the battery separately. The steps are the same as above.

Charger Safety Information

The charger should only be used indoors in a cool, dry, ventilated area, on a flat, stable, hard surface.
Keep the charger away from liquids, dust, debris or metal objects. Please do not cover the charger when using it.
Store and use charger in a safe area away from children.
Fully charging the battery before each use will help extend the life of the battery and reduce the possibility of over-discharge.
Do not charge the battery with any charger other than the original charger or a charger that you purchased directly from Vanpowers and is designed for use on your specific e-bike.

The charger is suitable for 110-240V 50/60 Hz standard household AC power sockets and it automatically detects and calculates the input voltage. Do not open the charger or modify the voltage input.
Do not yank or pull on the charger's cable. When unplugging, carefully unplug AC and DC cables by pulling directly on the plastic plug, not the cable.
The charger is expected to heat up moderately while charging. If the charger gets too hot to touch, you smell an odor, or any other signs of overheating, stop using the charger and contact Vanpowers.
The charger should be used with the indicator light facing upward. Do not use the charger upside down as this will inhibit cooling and shorten the life of the charger.

⚠ WARNING!
The battery should only be charged using the e-bike's original charger from Vanpowers or a charger purchased directly from Vanpowers that is designed for use with your specific e-bike serial number and approved by Vanpowers. Never use an aftermarket charger as this may result in damage, serious injury, or death.
Failure to adhere to battery charging information may result in unnecessary damage to the charging element, battery and or charger and may result in poor battery performance or failure to function properly and replacement is not covered by the warranty.

Battery Safety Information

MOVING AND STORAGE INSTRUCTIONS
If your e-bike will be stored for longer than 2 weeks at a time, follow these instructions to maintain the health and longevity of your battery.
Charge (or discharge) the battery to approximately 75% capacity.
Do not leave the battery on the e-bike frame. Remove it from the e-bike during long-term storage.
Store the battery in a dry, climate-controlled indoor location at a temperature between 32 F - 104°F (0°C - 40°C).
Check the battery once a month and, if necessary, charge the battery to 75% using a Vanpowers charger.
If stored for a long time, please keep the battery cool and dry, and charge the battery for 2 hours every 1 month.
Do not store batteries with little or no charge, as this can result in a permanent reduction in range or failure of the battery to function properly.
Please follow the instructions above for storing your Vanpowers bike and battery. Failure to follow proper battery storage practices may result in the battery not functioning properly. Replacement is not covered by warranty.

⚠ WARNING!
If the battery is physically damaged, non-functional, performs abnormally, is dropped or crashed, with or without obvious signs of damage, stop using and charging it and contact Vanpowers immediately.
Do not open the battery case as this will void the warranty and may result in battery damage, property damage, or serious injury or death.

CARE & MAINTENANCE

06

- Maintenance Interval
- Maintenance Method
- Lubricating Parts Maintenance
- Fastener Torque Specifications

Maintenance Interval

⚠ WARNING!

Regular inspections and maintenance are key to keeping your e-bike running properly and reducing wear and tear on its systems.
The recommended maintenance intervals are for reference only. Actual wear and service requirements will vary depending on conditions of use.
We generally recommend inspection, maintenance and necessary replacement during the time or mileage intervals listed first in the table below.

Check	Riding mileage*	Operating hours*	Useable Life
First check	After 300km/190miles or*	After 15 hours or*	After 3 months
Second check	After 2000km/1250miles or*	After 100 hours or*	After 1 year
Each subsequent check	Another 2000km/1250miles or*	Another 100 hours or*	Another 1 year

⚠ WARNING!

If you use your e-bike in challenging conditions or ride more than 2,000 km/1,250 miles each year, shorten the inspection interval and have it inspected by a professional every 6 months.

Maintenance Method

Daily cleaning of the entire e-bike

Before cleaning the battery or e-bike, always turn off the power of the e-bike, remove the battery, and disconnect the charger from the charging port and wall outlet. Use a dry or slightly damp cloth to clean the battery or e-bike frame. During the cleaning process, make sure the charging port of the e-bike is completely closed to prevent water from coming into contact with the electronic components. It is prohibited to use high-pressure water cannons to wash the e-bike.

Frame

Check whether the frame is bent or broken: if it is, please contact a professional immediately to replace it; if you find any cracks, or deformation of the e-bike, please do not use it.

Front fork

Check to compress the front fork and allow the front fork to rebound naturally without making noise; Check whether the fork crown interferes with the frame when the handlebar is at the left and right extreme positions; Check whether the front fork is bent or broken.

Brake

Check whether the brake lever is securely attached to the handlebar and any obvious signs of peeling or cracking.
Check the front and rear brake functions and motor cut-off function. If there is a malfunction, stop using it and contact a professional.
Check if the disc rotor and brake pads show any noticeable deformation or wear.
Check for any signs of brake fluid leakage.
Check for any unusual noises or difficulty in rotation. If there is a malfunction, stop using it and contact a professional.

Seat

Check if you can rotate the saddle. If it can be rotated, readjust and tighten it.
Check if you can move the saddle horizontally. If you can move the saddle, tighten the saddle fixing screw
If the seat post uses a quick-release locking mechanism, check for relevant warnings.
Inspect for the existence of minimum insertion depth markings on the saddle and seat post.

Tire

Check if the tire pressure value is within the recommended limits posted on the tire sidewall.
Inspect the tire tread for cracks, foreign object damage, or excessive wear. If the tire is cracked, damaged, or has low tread depth, please contact a professional to replace the tire.
Ensure there is a proper gap between the tire and the frame or fenders.

Wheelset

Check if there are protective covers on the outer side of the front and rear hub axles. Check if is there any crack, deformation, or discoloration on the front and rear wheel rims. If the wheel rim is cracked, deformed, or discolored, please stop using it and replace it. Inspect the spokes to ensure they are not bent, loose, or broken. If there is any looseness, ask a professional to check and adjust the spoke tension. Check if the wheelset is securely fastened, if it is difficult to rotate, or if there is any wobbling. If any issues are found, ask a professional to inspect and adjust the wheel. Check if the wheelset is making any unusual noises.

Crank and Pedal

Check if the pedals are securely fastened to the crank:
Check if the crank has any bending or deformation and if the pedals have any cracks or unusual noises. If any issues are found, please replace them immediately.

Gear Shifter and Chain

Check if the gear shifter is securely fastened to the handlebars and if it appears undamaged.
Check the appearance of the derailleur for any deformities, ensure its functionality is normal, and check for any issues such as skipping gears or jamming.
Check if is there any crack, jamming, or excessive wear on the chain. If yes, contact a professional to replace the chain.
Check if the gears shift smoothly.
Check for any unusual noise during operation.

Power system

Check the display functions: Check the buttons, battery level display, gear display, light display, Bluetooth connection, and verify if the brightness in actual use matches the specifications.
Check if the motor has a protective cover, runs smoothly without any blockages, if there are unusual noises, if the output wires are damaged, and if there are any foreign objects or exposed parts.
Check if the battery connector terminals are damaged.
Check if the controller, display, motor, and battery have any cracks or damages. Ensure they are securely attached.

Rack and MudGuard

Check that all reflectors are correctly installed and unobstructed.
Ensure that the rear rack mounting components are securely in place.
Verify that the tail light and tail light power cord are securely attached.
Check the mud guard for cracks, holes, or deformations. If any are found, replace them immediately.
Examine the mud guard mounting components to ensure they are securely in place.
Check for interference with panniers on the rear rack.

Lubricating Parts Maintenance

The e-bike contains many components that require the addition of lubricating oil to operate safely. We recommend that you regularly lubricate these key components according to the intervals provided in the table to ensure the smooth operation of the vehicle.

Accessories	Interval	Maintenance method
Chain	After 300km/190miles	Chain oil
Gear shift cable	Once a year when the function is not optimal.	Silicon-free grease
Wheel bearings, pedal bearings	Once a year	Bearing grease
Front fork	Once a year when the function is not optimal.	Dedicated spray grease
Quick release axle	Once a year	Grease, spray oil
Gear shift	Once a year when the function is not optimal.	Spray oil

Fastener Torque Specifications

To correctly tighten the screws on the vehicle, you must use an appropriate torque wrench that displays an adjustable range. You can find the torque specifications for adjusting additional components on the components themselves. If you can not find the specification you need in the table below, contact a professional for support.

Joining components	Screw types	Torque value
Handlebars with stem	4mm Allen Key	7-9 N.m
Stem with fork	5mm Allen Key	12-14 N.m
Gear shifter	5mm Allen Key	7-9 N.m
Left and right brake levers	5mm Allen Key	7-9 N.m
Display clamp ring	3mm Allen Key	1-2 N.m
Display buttons	2.5mm Allen Key	1-1.5 N.m
Bell	Phillips screw	3-6 N.m
Saddle	5mm Allen Key	10-12 N.m
Kickstand	5mm Allen Key	8-12 N.m
Disc brake caliper	5mm Allen Key	7-9 N.m
Pedals	15mm Open-End Wrench	35N.m

LIMITED WARRANTY

07

•General•

•Parts Covered by Warranty•

•Limited Warranty Guide and Exceptions•

General

Vanpowers bikes come with a limited warranty of up to 6 years from the date of customer receipt. If the e-bike is transferred to another owner, this warranty remains valid. Warranty claims must be made directly to Vanpowers. Any repairs during the.
warranty period must be carried out by Vanpowers or with prior approval from Vanpowers. Otherwise, Vanpowers reserves the right to deny warranty claims.

Parts Covered by Warranty

Accessories	Warranty period	Accessories	Warranty period
Frame	6 years	Battery	2 years & 500 charge-discharge cycles
Suspension fork	1 year	Controller	2 years
Chain wheel	1 year	Tires	1 year
Handlebar	1 year	Pedals	1 year
Seat post	1 year	Kickstand	1 year
Chain	1 year	Bottom bracket	1 year
Gearbox	1 year	Brake crank	1 year
Disc brake	1 year	Saddle	1 year
Handlebar grip	1 year	Motor	2 years
Lights	1 year	Sensor	2 years
Throttle	1 year	Display	1 year
Rim	1 year	Charger	1 year
Mud guard	1 year	Rear rack	1 year

Limited Warranty Guide and Exceptions

During the warranty period, if any core components are damaged, we will provide a new e-bike free of charge. If any non-core components within the warranty scope are damaged, we will send replacement parts free of charge, including shipping. After the warranty period expires, customers will need to purchase replacement parts/accessories themselves and pay for shipping.

Warranty does not cover any consumables, any non-original or unauthorized parts, any cover parts subject to normal wear and tear, damage due to non-compliance with the user manual, force majeure, accidents, theft, deliberate damage, misuse, negligence, abuse, alterations, modifications, improper assembly, incorrect usage, water damage, extreme riding, stunt riding, or improper/unauthorized maintenance and service.

For the battery, warranty does not cover damage caused by improper charger usage, improper maintenance, or other misuse, normal wear and tear, water damage (the battery should be stored in a dry environment with relative humidity below 85%), or improper usage, storage (battery storage temperature should ideally be controlled between 20-35°C), and wear parts (including but not limited to tires, inner tubes, brake pads, suspension components, and cables) are not within the warranty scope. If needed, we still offer assistance for these parts at a reasonable price.

VANPOWERS

vanpowers.com