# TEST REPORT

| | |
|---|---|
| Product Name: | Touch computer |
| FCC ID | 2BBVL-IEC151N302X |
| Trademark: | None, 2. TES or , MicroTouch or |
| Model Number: | IEC-151N3022P1I801, IEC-151N3022P1I802, IEC-151N3022P11001, IEC-151N3022P1F001 |
| Prepared For: | TES Touch Embedded Solutions Inc. Taiwan Branch |
| Address: | 7F., No.141, Sec. 3, Ren ai Rd., Da an Dist., Taipei City 106, Taiwan |
| Manufacturer: | TES Touch Embedded Solutions Inc. Taiwan Branch |
| Address: | 7F., No.141, Sec. 3, Ren ai Rd., Da an Dist., Taipei City 106, Taiwan |
| Prepared By: | Shenzhen CTB Testing Technology Co., Ltd. |
| Address: | 1&2/F., Building A, No.26, Xinhe Road, Xinqiao, Xinqiao Street, Bao'an District, Shenzhen, Guangdong, China |
| Sample Received Date: | Jun. 06, 2025 |
| Sample tested Date: | Jun. 06, 2025 to Jun. 30, 2025 |
| Issue Date: | Jun. 30, 2025 |
| Report No.: | CTB25060605501RF05 |
| Test Standards | FCC CFR Title 47 Part 15 Subpart E Section 15.407 |
| Test Results | PASS |
| Remark: | This is Client without radar detection function radio test report. |

| Compiled by: | Reviewed by: | Approved by: |
|---|---|---|
| Zhou Kui | Arron Liu | |
| Zhou Kui | Arron Liu | Bin Mei / Director |

Note: If there is any objection to the inspection results in this report, please submit a written report to the company within 15 days from the date of receiving the report. The test report is effective only with both signature and specialized stamp. This result(s) shown in this report refer only to the sample(s) tested. Without written approval of Shenzhen CTB Testing Technology Co., Ltd. this report can't be reproduced except in full. The tested sample(s) and the sample information are provided by the client. "*" indicates the testing items were fulfilled by subcontracted lab. "#" indicates the items are not in CNAS accreditation scope.

**TABLE OF CONTENT**

Test Report Declaration Page

**1. VERSION** . . . . . 3
**2. TEST SUMMARY** . . . . . 4
**3. MEASUREMENT UNCERTAINTY** . . . . . 5
**4. PRODUCT INFORMATION AND TEST SETUP** . . . . . 6
4.1 Product Information . . . . . 6
4.2 Test Setup Configuration . . . . . 6
4.3 Support Equipment . . . . . 6
4.4 Channel List . . . . . 7
4.5 Test Mode . . . . . 7
4.6 Test Environment . . . . . 8
**5. TEST FACILITY AND TEST INSTRUMENT USED** . . . . . 9
5.1 Test Facility . . . . . 9
5.2 Test Instrument Used . . . . . 9
**6. TECHNICAL REQUIREMENTS FOR DFS** . . . . . 11
6.1 Applicability of DFS Requirements . . . . . 11
6.2 DFS Detection Thresholds and Response Requirement . . . . . 11
6.3 Radar Test Waveforms . . . . . 12
**7. DFS DETECTION THRESHOLD LEVELS** . . . . . 18
**8. CONDUCTED TEST PROCEDURE** . . . . . 19
**9. EUT TEST SETUP PHOTOGRAPHS** . . . . . 21

*(Note: N/A means not applicable)*

## 1. VERSION

| Report No. | Issue Date | Description | Approved |
|---|---|---|---|
| CTB25060605501RF05 | Jun. 30, 2025 | Original | Valid |

## 2. TEST SUMMARY

The Product has been tested according to the following specifications:

| Test Item | Test Requirement | Test method | Result |
|---|---|---|---|
| DFS Detection Threshold | 47 CFR Part 15 Subpart E Section 15.407 (h)(2) | KDB 905462 D02 | N/A |
| Channel Availability Check Time | 47 CFR Part 15 Subpart E Section 15.407 (h)(2)(ii) | KDB 905462 D02 | N/A |
| U-NII Detection Bandwidth | 47 CFR Part 15 Subpart E Section 15.407 (h)(2) | KDB 905462 D02 | N/A |
| Channel Closing Transmission Time | 47 CFR Part 15 Subpart E Section 15.407 (h)(2)(iii) | KDB 905462 D02 | PASS |
| Channel Move Time | 47 CFR Part 15 Subpart E Section 15.407 (h)(2)(iii) | KDB 905462 D02 | PASS |
| Non-Occupancy Period | 47 CFR Part 15 Subpart E Section 15.407 (h)(2)(iv) | KDB 905462 D02 | PASS |

Remark:
The tested sample and the sample information are provided by the client.
Tx: In this whole report Tx (or tx) means Transmitter.
Rx: In this whole report Rx (or rx) means Receiver.
RF: In this whole report RF means Radiated Frequency.
CH: In this whole report CH means channel.
Volt: In this whole report Volt means Voltage.
Temp: In this whole report Temp means Temperature.
Humid: In this whole report Humid means humidity.
Press: In this whole report Press means Pressure.
N/A: In this whole report not application.

## 3. MEASUREMENT UNCERTAINTY

Where relevant, the following measurement uncertainty levels have been estimated for tests performed on the Product as specified in CISPR 16-4-2. This uncertainty represents an expanded uncertainty expressed at approximately the 95% confidence level using a coverage factor of k=2.

| No. | Item | Uncertainty |
|---|---|---|
| 1 | Occupancy bandwidth | U=±54.3Hz |
| 2 | Adjacent channel power | U=±1.3dB |
| 3 | Conducted Adjacent channel power | U=±1.38dB |
| 4 | Conducted output power Above 1G | U=±1.0dB |
| 5 | Conducted output power below 1G | U=±0.9dB |
| 6 | Power Spectral Density , Conduction | U=±1.0dB |
| 7 | Conduction spurious emissions | U=±2.8dB |
| 8 | Out of band emission | U=±54Hz |
| 9 | 3m camber Radiated spurious emission(30MHz-1GHz) | U=±4.3dB |
| 10 | 3m chamber Radiated spurious emission(1GHz-18GHz) | U=±4.5dB |
| 11 | humidity uncertainty | U=±5.3% |
| 12 | Temperature uncertainty | U=±0.59℃ |
| 13 | Supply volyages | U=±3% |
| 14 | Time | U=±5% |

## 4. PRODUCT INFORMATION AND TEST SETUP

### 4.1 Product Information

| | |
|---|---|
| Model(s): | IEC-151N3022P1I801, IEC-151N3022P1I802,<br>IEC-151N3022P11001, IEC-151N3022P1F001 |
| Model Description: | All the model are the same circuit and RF module, only the model names are different. Test sample model: IEC-151N3022P1I801 |
| Wi-Fi Specification: | IEEE 802.11a/n/ac |
| Hardware Version: | V1.0 |
| Software Version: | V1.0 |
| Operation Frequency: | IEEE 802.11a/n/ac(20M): 5250MHz ~5350 MHz/ 4 channel<br>IEEE802.11n/ac(40M): 5250MHz ~5350 MHz/ 2 channel<br>IEEE802.11ac(80M): 5250MHz ~5350 MHz/ 1 channel<br><br>IEEE 802.11a/n/ac(20M): 5470MHz ~5725 MHz/ 11 channel<br>IEEE802.11n/ac(40M): 5470MHz ~5725 MHz/ 5 channel<br>IEEE802.11ac(80M): 5470MHz ~5725 MHz/ 3 channel |
| Type of Modulation: | WiFi: OFDM |
| Antenna installation: | WiFi: FPC antenna |
| Antenna Gain: | WiFi (5.3G): Ant1:2.51dBi, Ant2: 3.21dBi<br>WiFi (5.6G): Ant1: 3.77dBi, Ant2: 3.38dBi |
| Ratings: | Manufacturer: FJ<br>Model: FJ-GN2048A1202000<br>Power: 12V⎓2A, 24W |

### 4.2 Test Setup Configuration

See test photographs attached in EUT TEST SETUP PHOTOGRAPHS for the actual connections between Product and support equipment.

### 4.3 Support Equipment

| Item | Equipment | Mfr/Brand | Model/Type No. | Series No. | Note |
|---|---|---|---|---|---|
| 1. | Laptop | DELL | Vostro 5490 | N/A | AE |
| 2. | Monitor | DELL | SE2218HV | N/A | AE |
| 3. | Adapter | FUJIA | FJ-GN2048A1202000 | N/A | AE |

***Notes:***

1. All the equipment/cables were placed in the worst-case configuration to maximize the emission during the test.
2. Grounding was established in accordance with the manufacturer's requirements and conditions for the intended use.

4.4 Channel List

| For 802.11a/n/ac( 20M) Operation in the 5250MHz ~5350 MHz band | | | |
|---|---|---|---|
| Channel | Frequency | Channel | Frequency |
| 52 | 5260MHz | 60 | 5300MHz |
| 56 | 5280MHz | 64 | 5320MHz |
| For 802.11a/n/ac( 20M) Operation in the 5470MHz ~5725 MHz band | | | |
| Channel | Frequency | Channel | Frequency |
| 100 | 5500MHz | 124 | 5620 MHz |
| 104 | 5520MHz | 128 | 5640 MHz |
| 108 | 5540MHz | 132 | 5660 MHz |
| 112 | 5560MHz | 136 | 5680MHz |
| 116 | 5580MHz | 140 | 5700MHz |
| 120 | 5600 MHz | | |

| For 802.11n/ac(40M) Operation in the 5250MHz ~5350 MHz band | | | |
|---|---|---|---|
| Channel | Frequency | Channel | Frequency |
| 54 | 5270MHz | 62 | 5310MHz |
| For 802.11n/ac(40M) Operation in the 5470MHz ~5725 MHz band | | | |
| Channel | Frequency | Channel | Frequency |
| 102 | 5510MHz | 126 | 5630MHz |
| 110 | 5550MHz | 134 | 5670MHz |
| 118 | 5590MHz | | |

| For 802.11ac(80M) Operation in the 5250MHz ~5350 MHz band | | | |
|---|---|---|---|
| Channel | Frequency | Channel | Frequency |
| 58 | 5290MHz | NA | NA |
| For 802.11ac(80M) Operation in the 5470MHz ~5725 MHz band | | | |
| Channel | Frequency | Channel | Frequency |
| 106 | 5530MHz | 138 | 5690MHz |
| 122 | 5610 MHz | | |

4.5 Test Mode

All test mode(s) and condition(s) mentioned were considered and evaluated respectively by performing full tests, the worst data were recorded and reported.

| | | | | |
|---|---|---|---|---|
| 802.11a/n/ac(20M) | 5250MHz ~5350 MHz | Channel 52 | Channel 56 | Channel 64 |
| | | 5260MHz | 5280MHz | 5320MHz |
| 802.11n/ac(40M) | 5250MHz ~5350 MHz | Channel54 | N/A | Channel62 |
| | | 5270MHz | N/A | 5310MHz |
| 802.11ac(80M) | 5250MHz ~5350 MHz | N/A | Channel 58 | N/A |
| | | N/A | 5290MHz | N/A |
| 802.11a/n/ac(20M) | 5470MHz ~5725 MHz | Channel 100 | Channel116 | Channel140 |
| | | 5500MHz | 5580MHz | 5700MHz |
| 802.11n/ac(40M) | 5470MHz ~5725 MHz | Channel 102 | Channel118 | Channel 134 |
| | | 5510MHz | 5590MHz | 5670MHz |
| 802.11ac(80M) | 5470MHz ~5725 MHz | Channel 106 | N/A | Channel 138 |
| | | 5530MHz | N/A | 5690MHz |

4.6 Test Environment

| | |
|---|---|
| Humidity(%): | 54 |
| Atmospheric Pressure(kPa): | 101 |
| Normal Voltage(AC):NV | 120V |
| Normal Temperature(℃):NT | 23 |
| Low Temperature(℃):LT | 0 |
| High Temperature(℃):HT | 40 |

## 5. TEST FACILITY AND TEST INSTRUMENT USED

### 5.1 Test Facility

All measurement facilities used to collect the measurement data are located at 1&2F., Building A, No. 26, Xinhe Road, Xinqiao, Xinqiao Street, Bao'an District, Shenzhen, Guangdong, China. The site and apparatus are constructed in conformance with the requirements of ANSI C63.4 and CISPR 16-1-1 other equivalent standards.

FCC Test Firm Registration Number: CN1276

### 5.2 Test Instrument Used

| No. | Equipment | Manufacturer | Type No. | Serial No. | Firmware Version | Calibrated Date | Calibrated until |
|---|---|---|---|---|---|---|---|
| 1 | Spectrum Analyzer | Agilent | N9020A | MY52090073 | A.14.16 | 2025/5/23 | 2026/5/22 |
| 2 | Power Sensor | Agilent | U2021XA | MY56120032 | / | 2025/5/23 | 2026/5/22 |
| 3 | Power Sensor | Agilent | U2021XA | MY56120034 | / | 2025/5/23 | 2026/5/22 |
| 4 | Communication test set | R&S | CMW500 | 108058 | V3.5.80 | 2025/5/23 | 2026/5/22 |
| 5 | Spectrum Analyzer | KEYSIGHT | N9020A | MY51289897 | A.14.16 | 2025/5/23 | 2026/5/22 |
| 6 | Signal Generator | Agilent | N5181A | MY50140365 | A.01.60 | 2025/5/22 | 2026/5/21 |
| 7 | Vector signal generator | Agilent | N5182A | MY47420195 | A.01.87 | 2025/5/22 | 2026/5/21 |
| 8 | Communication test set | Agilent | E5515C | MY50102567 | B.19.07 （E1962B ） | 2025/5/22 | 2026/5/21 |
| 9 | 2.4 GHz Filter | Shenxiang | MSF2400-2483.5MS-1154 | 20181015001 | / | 2025/6/18 | 2026/6/17 |
| 10 | 5 GHz Filter | Shenxiang | MSF5150-5850 MS-1155 | 20181015001 | / | 2025/6/18 | 2026/6/17 |
| 11 | Filter | Xingbo | XBLBQ-DZA120 | 190821-1-1 | / | 2025/5/24 | 2026/5/23 |
| 12 | BT&WI-FI Automatic test software | Micowave | MTS8310 | Ver. 2.0.0.0 | / | / | / |
| 13 | Rohde & Schwarz SFU Broadcast Test System | R&S | SFU | 101017 | / | 2024/10/31 | 2025/10/30 |
| 14 | Temperature humidity chamber | Hongjing | TH-80CH | DG-15174 | / | 2025/5/22 | 2026/5/21 |
| 15 | 234G Automatic test software | Micowave | MTS8200 | Ver. 2.0.0.0 | / | / | / |
| 16 | 966 chamber | C.R.T. | 966 | / | / | 2024/6/23 | 2027/6/22 |

| | | | | | | | |
|---|---|---|---|---|---|---|---|
| 17 | Receiver | R&S | ESPI | 100362 | RF_ATTEN_7（104489/003） | 2025/5/23 | 2026/5/22 |
| 18 | Amplifier | HP | 8447E | 2945A02747 | / | 2025/5/23 | 2026/5/22 |
| 19 | Amplifier | Agilent | 8449B | 3008A01838 | / | 2025/6/2 | 2026/6/1 |
| 20 | TRILOG Broadband Antenna | Schwarzbeck | VULB 9168 | 00869 | / | 2025/6/29 | 2026/6/28 |
| 21 | Double Ridged Broadband Horn Antenna | Schwarzbeck | BBHA9120D | 01911 | / | 2025/6/1 | 2026/5/31 |
| 22 | EMI test software | Fala | EZ-EMC | FA-03A2 RE | / | / | / |
| 23 | Loop Antenna | Schwarzbeck | FMZB 1519B | 1519B-224 | / | 2025/6/2 | 2026/6/1 |
| 24 | loop antenna | ZHINAN | ZN30900A | GTS534 | / | / | / |
| 25 | 40G Horn antenna | A/H/System | SAS-574 | 588 | / | 2025/6/2 | 2026/6/1 |
| 26 | Amplifier | AEROFLEX | Aeroflex | 097 | / | 2025/6/2 | 2026/6/1 |
| 27 | Power Metter | KEYSIGHT | N1912AP | N/A | A.05.00 | 2025/6/2 | 2026/6/1 |

## 6. TECHNICAL REQUIREMENTS FOR DFS

### 6.1 Applicability of DFS Requirements

#### 6.1.1 Applicability of DFS Requirements Prior to use of a Channel

| Requirement | Operational Mode | | |
|---|---|---|---|
| | Master | Client Without Radar Detection | Client With Radar Detection |
| Non-Occupancy Period | Yes | Not required | Yes |
| DFS Detection Threshold | Yes | Not required | Yes |
| Channel Availability Check Time | Yes | Not required | Not required |
| U-NII Detection Bandwidth | Yes | Not required | Yes |

#### 6.1.2 Applicability of DFS Requirements during Normal Operation

| Requirement | Operational Mode | |
|---|---|---|
| | Master or Client With Radar Detection | Client Without Radar Detection |
| DFS Detection Threshold | Yes | Not required |
| Channel Closing Transmission Time | Yes | Yes |
| Channel Move Time | Yes | Yes |
| U-NII Detection Bandwidth | Yes | Not required |

| Additional requirements for devices with multiple bandwidth modes | Operational Mode | |
|---|---|---|
| | Master or Client With Radar Detection | Client Without Radar Detection |
| U-NII Detection Bandwidth and Statistical Performance Check | All BW modes must be tested | Not required |
| Channel Move Time and Channel Closing Transmission Time | Test using widest BW mode available | Test using the widest BW mode available for the link |
| All other tests | Any single BW mode | Not required |
| Note: Frequencies selected for statistical performance check (Section 7.8.4) should include several frequencies within the radar detection bandwidth and frequencies near the edge of the radar detection bandwidth. For 802.11 devices it is suggested to select frequencies in each of the bonded 20 MHz channels and the channel center frequency. | | |

### 6.2 DFS Detection Thresholds and Response Requirement

Below table provides the DFS Detection Thresholds for Master Devices as well as Client Devices incorporating In-Service Monitoring.

**DFS Detection Thresholds for Master Devices and Client Devices With Radar Detection.**

| Maximum Transmit Power | Value (See Notes 1 , 2 and 3) |
|---|---|
| EIRP ≥ 200 milliwatt | -64 dBm |
| EIRP < 200 milliwatt and power spectral density < 10 dBm / MHz | -62 dBm |
| EIRP < 200 milliwatt and that do not meet the power spectral density requirement | -64 dBm |
| Note 1: This is the level at the input of the receiver assuming a 0 dBi receive antenna.<br>Note 2: Throughout these test procedures an additional 1 dB has been added to the amplitude of the test transmission waveforms to account for variations in measurement equipment. This will ensure that the test<br>signal is at or above the detection threshold level to trigger a DFS response.<br>Note3: EIRP is based on the highest antenna gain. For MIMO devices refer to KDB Publication 662911 D01. | |

**DFS Response Requirement Values**

| Parameter | Value |
|---|---|
| Non-occupancy period | Minimum 30 minutes. |
| Channel Availability Check Time | 60 seconds. |
| Channel Move Time | 10 seconds. (See Note 1.) |
| Channel Closing Transmission Time | 200 milliseconds + an aggregate of 60 milliseconds over remaining 10 second period. (See Notes 1 and 2.) |
| U-NII Detection Bandwidth | Minimum 100% of the U- NII 99% transmission power bandwidth. (See Note 3.) |
| Note 1: Channel Move Time and the Channel Closing Transmission Time should be performed with Radar Type 0. The measurement timing begins at the end of the Radar Type 0 burst.<br>Note 2: The Channel Closing Transmission Time is comprised of 200 milliseconds starting at the beginning of the Channel Move Time plus any additional intermittent control signals required to facilitate a Channel move (an aggregate of 60 milliseconds) during the remainder of the 10 second period. The aggregate duration of control signals will not count quiet periods in between transmissions.<br>Note 3: During the U-NII Detection Bandwidth detection test, radar type 0 should be used. For each frequency step the minimum percentage of detection is 90 percent. Measurements are performed with no data traffic. | |

## 6.3 Radar Test Waveforms

This section provides the parameters for required test waveforms, minimum percentage of successful detections, and the minimum number of trials that must be used for determining DFS conformance. Step intervals of 0.1 microsecond for Pulse Width, 1 microsecond for PRI, 1 MHz for chirp width and 1 for the number of pulses will be utilized for the random determination of specific test waveforms.

### 6.3.1 Short Pulse Radar Test Waveforms

| Radar Type | Pulse Width (μsec) | PRI (μsec) | Number of Pulses | Minimum Percentage of Successful Detection | Minimum Number of Trials |
|---|---|---|---|---|---|
| 0 | 1 | 1428 | 18 | See Note1 | See Note1 |
| 1 | | Test A: 15 unique PRI values randomly selected from the list of 23 PRI values in Table 5a | $\text{Roundup}\left\{\left(\frac{1}{360}\right)\cdot\left(\frac{19\cdot 10^6}{\text{PRI}_{\mu sec}}\right)\right\}$ | 60% | 30 |
| | | Test B: 15 unique PRI values randomly selected within the range of 518-3066 μsec, with a minimum increment of 1 | | | |

| | | | | | |
|---|---|---|---|---|---|
| | | μsec, excluding PRI values selected in Test A | | | |
| 2 | 1-5 | 150-230 | 23-29 | 60% | 30 |
| 3 | 6-10 | 200-500 | 16-18 | 60% | 30 |
| 4 | 1-20 | 200-500 | 12-16 | 60% | 30 |
| Aggregate (Radar Types 1-4) | | | | 80% | 120 |
| Note 1: Short Pulse Radar Type 0 should be used for the detection bandwidth test, channel move time, and channel closing time tests. | | | | | |

A minimum of 30 unique waveforms are required for each of the Short Pulse Radar Types 2 through 4. If more than 30 waveforms are used for Short Pulse Radar Types 2 through 4, then each additional waveform must also be unique and not repeated from the previous waveforms. If more than 30 waveforms are used for Short Pulse Radar Type 1, then each additional waveform is generated with Test B and must also be unique and not repeated from the previous waveforms in Tests A or B.

**Pulse Repetition Intervals Values for Test A**

| Pulse Repetition Frequency Number | Pulse Repetition Frequency (Pulses Per Second) | Pulse Repetition Interval (Microseconds) |
|---|---|---|
| 1 | 1930.6 | 518 |
| 2 | 1858.8 | 538 |
| 3 | 1792.2 | 558 |
| 4 | 1730.2 | 578 |
| 5 | 1672.3 | 598 |
| 6 | 1618.2 | 618 |
| 7 | 1567.5 | 638 |
| 8 | 1519.9 | 658 |
| 9 | 1475 | 678 |
| 10 | 1432.8 | 698 |
| 11 | 1392.9 | 718 |
| 12 | 1355.1 | 738 |
| 13 | 1319.4 | 758 |
| 14 | 1285.4 | 778 |
| 15 | 1253.2 | 798 |
| 16 | 1222.6 | 818 |
| 17 | 1193.4 | 838 |
| 18 | 1165.7 | 858 |
| 19 | 1139.1 | 878 |
| 20 | 1113.7 | 898 |
| 21 | 1089.4 | 918 |
| 22 | 1066.2 | 938 |
| 23 | 326.3 | 3066 |

6.3.2 Long Pulse Radar Test Waveform

| Radar Type | Pulse Width (μsec) | Chirp Width (MHz) | PRI (μsec) | Number of Pulses per Burst | Number of Bursts | Minimum Percentage of Successful Detection | Minimum Number of Trials |
|---|---|---|---|---|---|---|---|
| 5 | 50-100 | 5-20 | 1000-2000 | 1-3 | 8-20 | 80% | 30 |

The parameters for this waveform are randomly chosen. Thirty unique waveforms are required for the Long Pulse Radar Type waveforms. If more than 30 waveforms are used for the Long Pulse Radar Type waveforms, then each additional waveform must also be unique and not repeated from the previous waveforms.

**Each waveform is defined as follows:**
1) The transmission period for the Long Pulse Radar test signal is 12 seconds.
2) There are a total of 8 to 20 Bursts in the 12 second period, with the number of Bursts being randomly chosen. This number is Burst Count.
3) Each Burst consists of 1 to 3 pulses, with the number of pulses being randomly chosen. Each Burst within the 12 second sequence may have a different number of pulses.
4) The pulse width is between 50 and 100 microseconds, with the pulse width being randomly chosen. Each pulse within a Burst will have the same pulse width. Pulses in different Bursts may have different pulse widths.
5) Each pulse has a linear frequency modulated chirp between 5 and 20 MHz, with the chirp width being randomly chosen. Each pulse within a transmission period will have the same chirp width. The chirp is centered on the pulse. For example, with a radar frequency of 5300 MHz and a 20 MHz chirped signal, the chirp starts at 5290 MHz and ends at 5310 MHz.
6) If more than one pulse is present in a Burst, the time between the pulses will be between 1000 and 2000 microseconds, with the time being randomly chosen. If three pulses are present in a Burst, the random time interval between the first and second pulses is chosen independently of the random time interval between the second and third pulses.
7) The 12 second transmission period is divided into even intervals. The number of intervals is equal to Burst Count. Each interval is of length (12,000,000 / Burst Count) microseconds. Each interval contains one Burst. The start time for the Burst, relative to the beginning of the interval, is between 1 and [(12,000,000 / Burst Count) – (Total Burst Length) + (One Random PRI Interval)] microseconds, with the start time being randomly chosen. The step interval for the start time is 1 microsecond. The start time for each Burst is chosen randomly.

**A representative example of a Long Pulse Radar Type waveform:**
1) The total test waveform length is 12 seconds.
2) Eight (8) Bursts are randomly generated for the Burst Count.
3) Burst 1 has 2 randomly generated pulses.
4) The pulse width (for both pulses) is randomly selected to be 75 microseconds.
5) The PRI is randomly selected to be at 1213 microseconds.
6) Bursts 2 through 8 are generated using steps 3 – 5.
7) Each Burst is contained in even intervals of 1,500,000 microseconds. The starting location for Pulse 1, Burst 1 is randomly generated (1 to 1,500,000 minus the total Burst 1 length + 1 random PRI interval) at the 325,001 microsecond step. Bursts 2 through 8 randomly fall in successive 1,500,000 microsecond intervals (i.e. Burst 2 falls in the 1,500,001 – 3,000,000 microsecond range).

**Graphical representation of the Long Pulse Radar Test Waveform.**

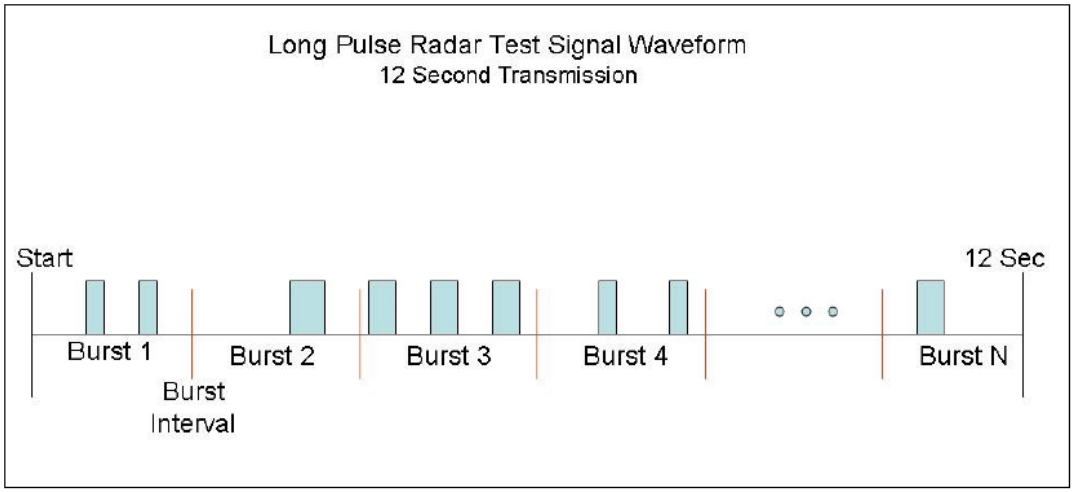


6.3.3 Frequency Hopping Radar Test Waveform

| Radar Type | Pulse Width (µsec) | PRI (µsec) | Pulses per Hop | Hopping Rate (kHz) | Hopping Sequence Length (msec) | Minimum Percentage of Successful Detection | Minimum Number of Trials |
|---|---|---|---|---|---|---|---|
| 6 | 1 | 333 | 9 | 0.333 | 300 | 70% | 30 |

For the Frequency Hopping Radar Type, the same *Burst* parameters are used for each waveform. The hopping sequence is different for each waveform and a 100-length segment is selected from the hopping sequence defined by the following algorithm:
The first frequency in a hopping sequence is selected randomly from the group of 475 integer frequencies from 5250 – 5724 MHz. Next, the frequency that was just chosen is removed from the group and a frequency is randomly selected from the remaining 474 frequencies in the group. This process continues until all 475 frequencies are chosen for the set. For selection of a random frequency, the frequencies remaining within the group are always treated as equally likely

**Radar Waveform Calibration**

The following equipment setup was used to calibrate the conducted radar waveform. A spectrum analyzer was used to establish the test signal level for each radar type. During this process there were replace 50ohm terminal from master and client device and no transmissions by either the master or client device. The spectrum analyzer was switched to the zero span (time domain) at the frequency of the radar waveform generator. Peak detection was utilized. The spectrum analyzer resolution bandwidth (RBW) and video bandwidth (VBW) were set to 3MHz and 3 MHz.
The signal generator amplitude was set so that the power level measured at the spectrum analyzer was -61dBm due to the interference threshold level is not required

### 6.3.4 DFS test setup

Setup for Master with injection at the Master

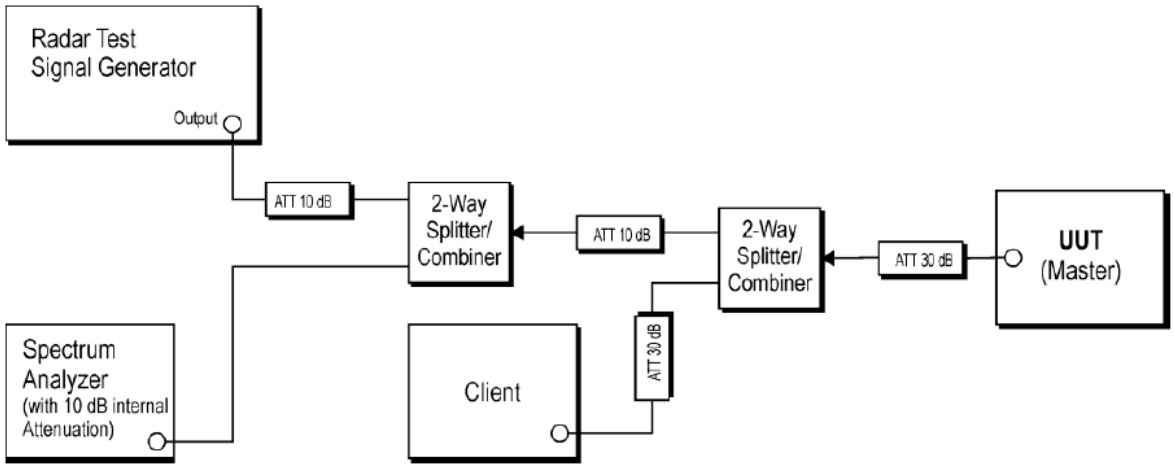


Setup for Client with injection at the Master

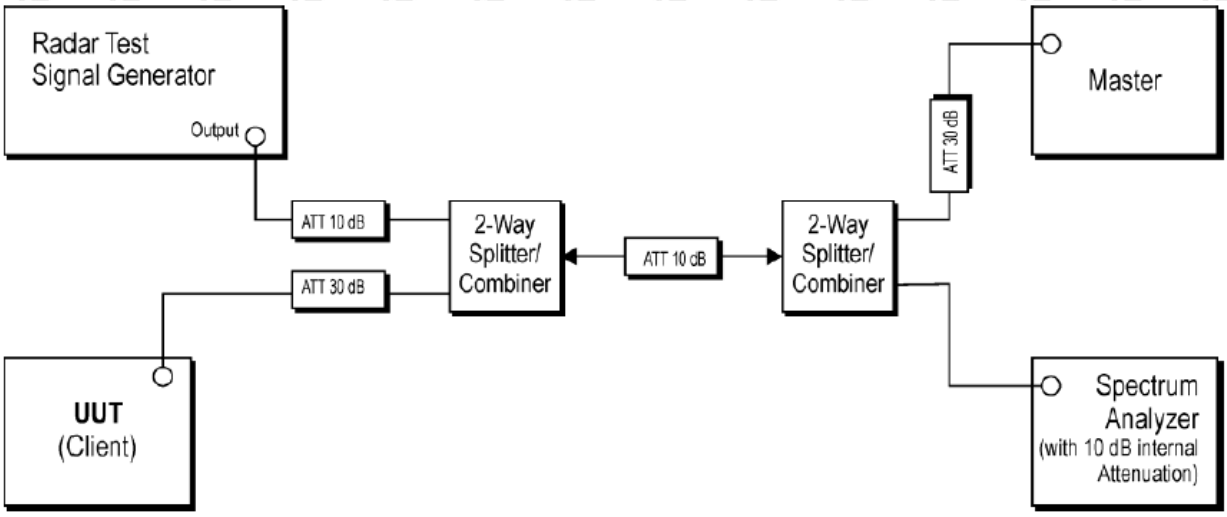

Setup for Client with injection at the Client

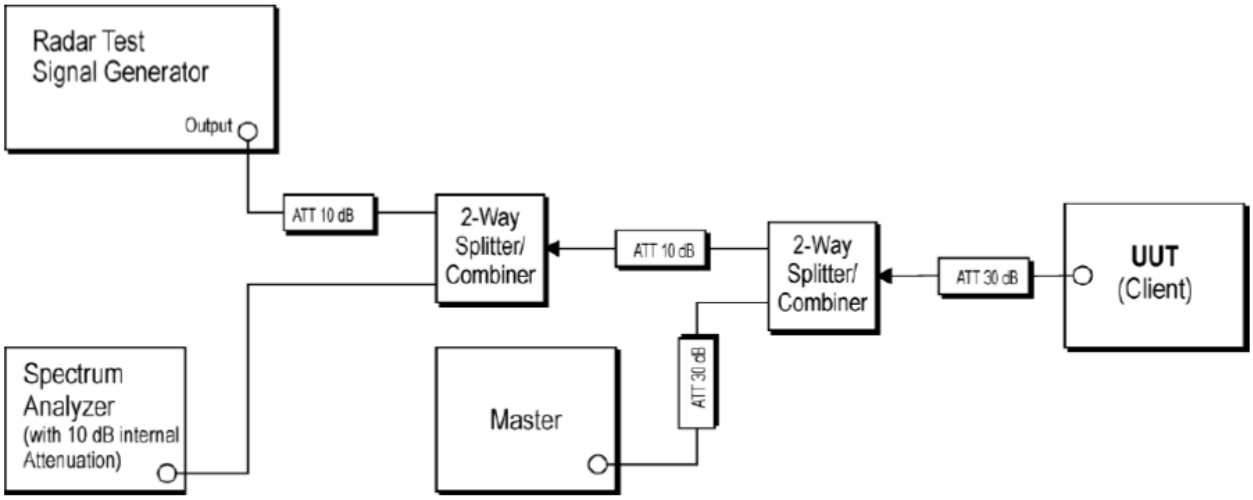


6.3.5 Channel Loading/Data Streaming

Timing plots are required with calculations demonstrating a minimum channel loading of approximately 17% or greater.

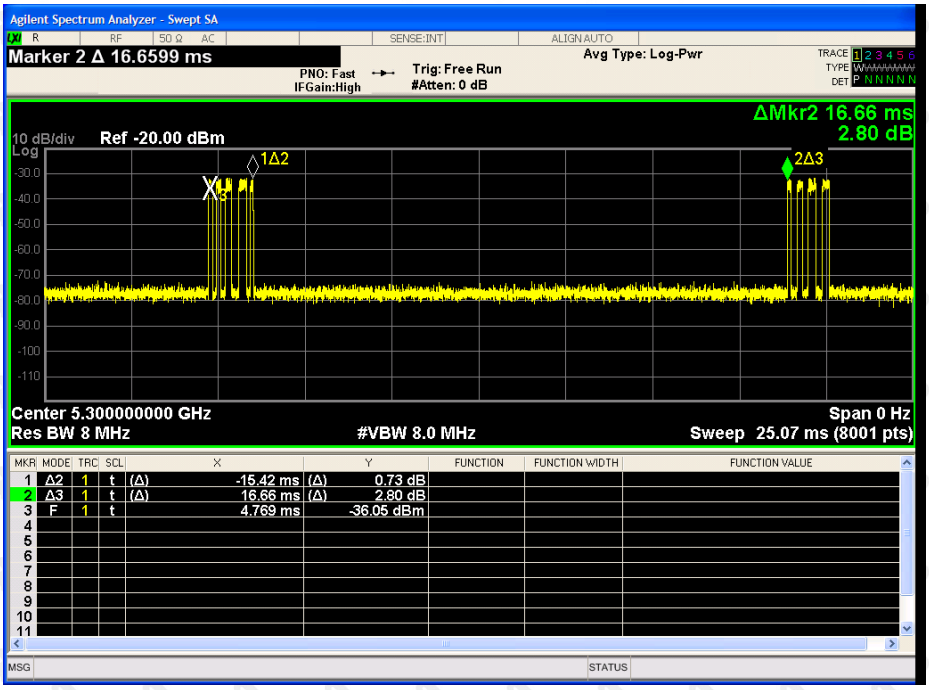

## 7. DFS DETECTION THRESHOLD LEVELS

Test result:

DFS Threshold level: -63 dBm
The Interference Radar Detection Threshold Level is (-64dBm) +(0)[dBi]+ 1 dB= -63 dBm. That ad been taken into account the master output power range and antenna gain.

**Calibration plots for each of the required radar waveforms**

Radar type0

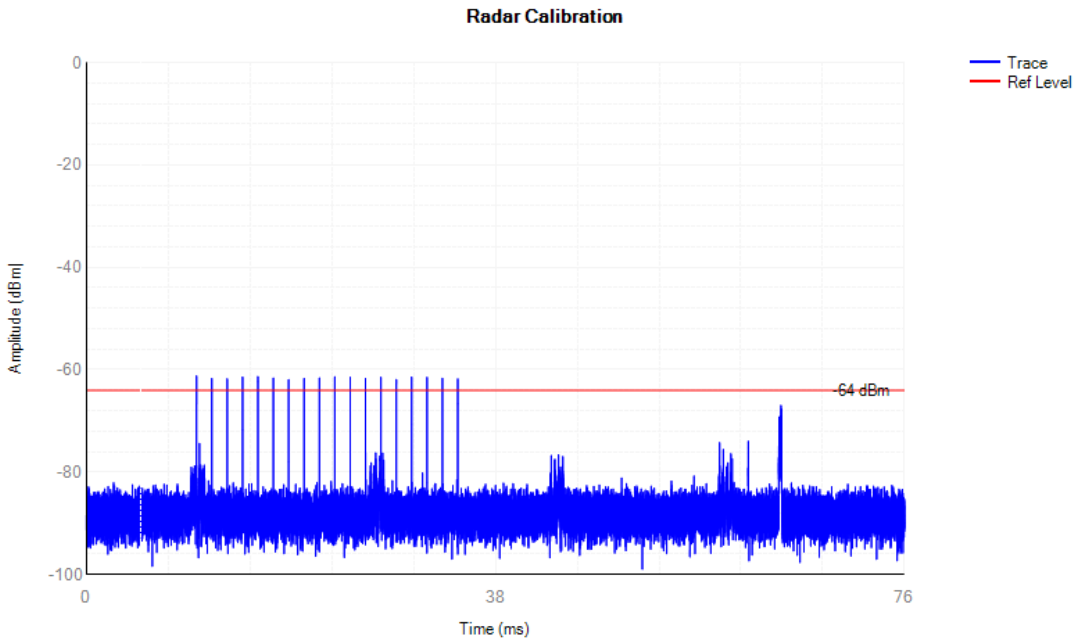

## 8. CONDUCTED TEST PROCEDURE

1) One frequency will be chosen from the Operating Channels of the UUT within the 5250-5350 MHz or 5470-5725MHz bands.
2) The Client Device (EUT) is set up the above diagram and communications between the Master device and the Client is established.
3) Stream the channel loading test file from the Master Device to the Client Device on the test Channel for the entire period of the test.
4) An additional 1 dB is added to the radar test signal to ensure it is at or above the DFS Detection Threshold, accounting for equipment variations/errors.
5) Observe the transmissions of the UUT at the end of the Burst on the Operating Channel for duration greater than 12 seconds for Radar Type 0 to ensure detection occurs.
6) After the initial radar burst the channel is monitored for 30 minutes to ensure no transmissions or beacons occur. A second monitoring setup is used to verify that the Master and Client have both moved to different channels.

Test Results:
**Radar Type 0 Channel Move Time**

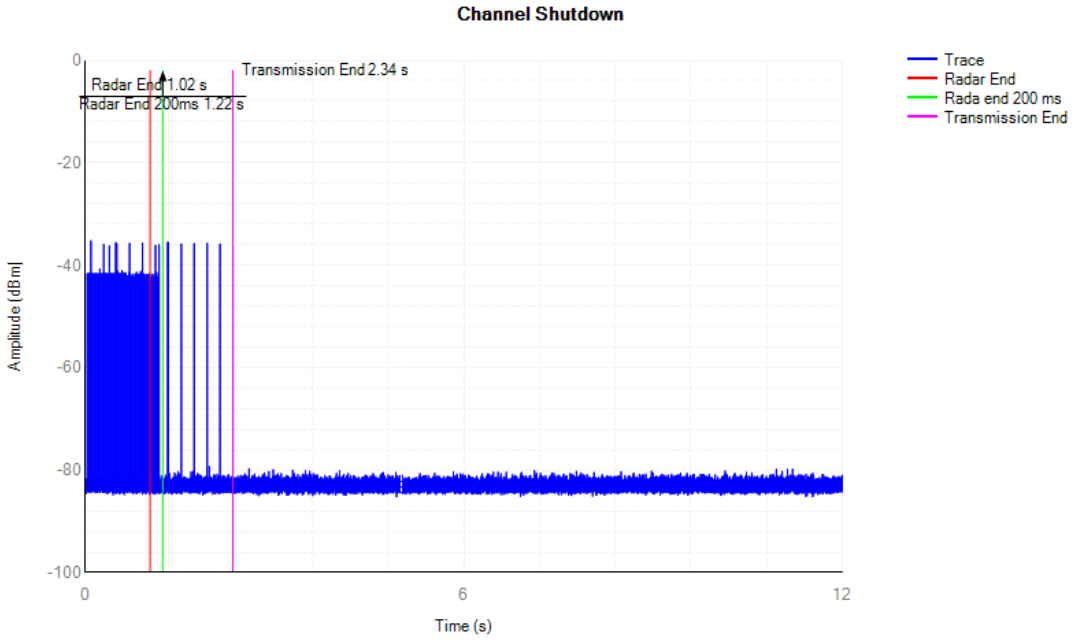

**Radar Type 0 Channel Closing Transmissiom**

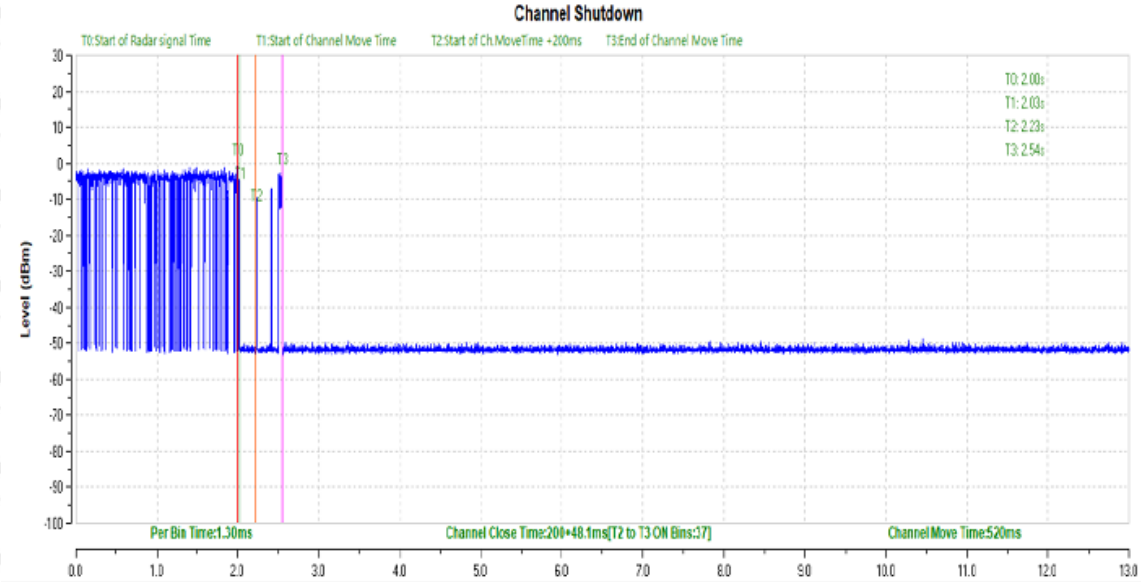


**Non-occupancy Period Period(without radar detection)**

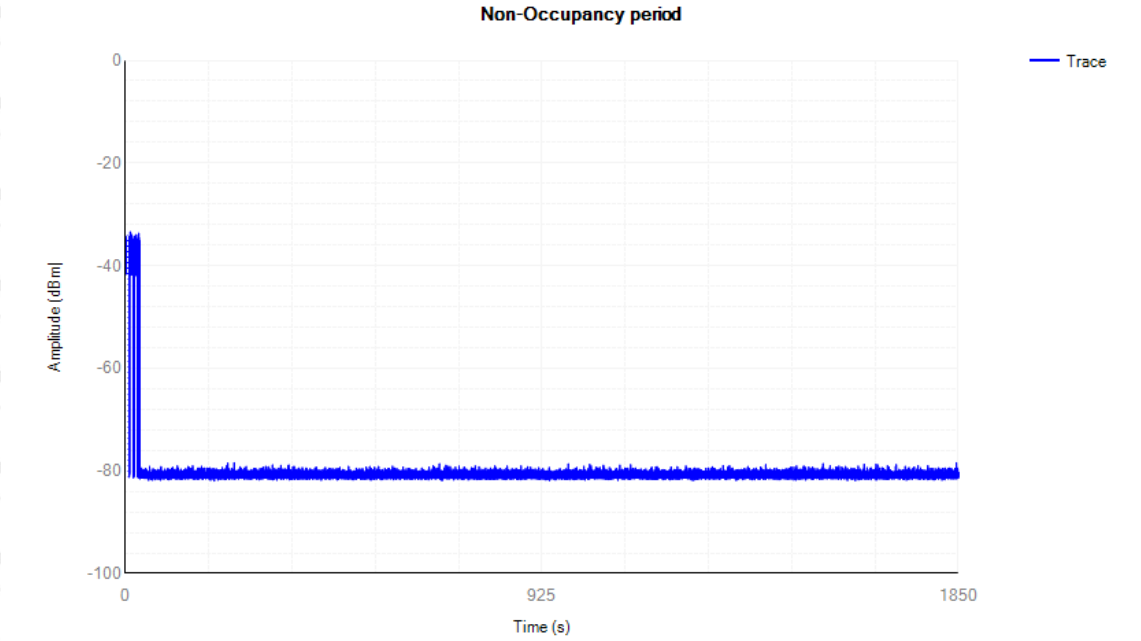


| Test Item | Modulation Mode | Freq. (MHz) | Limit | Results |
|---|---|---|---|---|
| Channel Move Time | AC80 | 5290 | 10s | Pass |
| Channel Closing Transmission Time | AC80 | 5290 | 60ms | Pass |
| Non-Occupancy Period | AC80 | 5290 | 30 minutes | Pass |

## 9. EUT TEST SETUP PHOTOGRAPHS

Spurious emissions

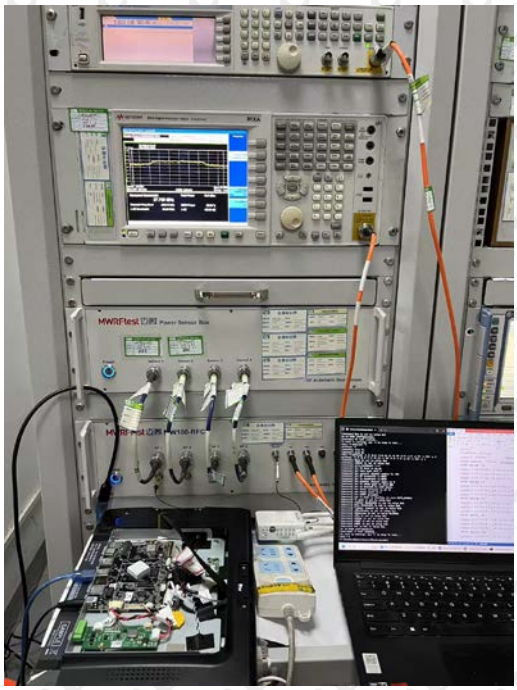

※※※※※ **END OF REPORT** ※※※※※