TEST REPORT

Product Name:	Tablet
FCC ID	2BBVL-M1-101RT-A1
Trademark:	MicroTouch or MicroTouch
Model Number:	M1-101RT-A1
Prepared For:	TES Touch Embedded Solutions Inc. Taiwan Branch
Address:	7F., No.141, Sec. 3, Ren ai Rd., Da an Dist., Taipei City 106, Taiwan
Manufacturer:	TES Touch Embedded Solutions Inc. Taiwan Branch
Address:	7F., No.141, Sec. 3, Ren ai Rd., Da an Dist., Taipei City 106, Taiwan
Prepared By:	Shenzhen CTB Testing Technology Co., Ltd.
Address:	1&2/F., Building A, No.26, Xinhe Road, Xinqiao, Xinqiao Street, Bao'an District, Shenzhen, Guangdong, China
Sample Received Date:	Jul. 22, 2025
Sample tested Date:	Jul. 22, 2025 to Aug. 14, 2025
Issue Date:	Aug. 14, 2025
Report No.:	CTB25072209305RF05
Test Standards	FCC CFR Title 47 Part 15 Subpart E Section 15.407
Test Results	PASS
Remark:	This is Client without radar detection function radio test report.

Compiled by:	Reviewed by:	Approved by:
Zhou Kui	Arron Liu	
Zhou Kui	Arron Liu	Bin Mei / Director

Note: If there is any objection to the inspection results in this report, please submit a written report to the company within 15 days from the date of receiving the report. The test report is effective only with both signature and specialized stamp. This result(s) shown in this report refer only to the sample(s) tested. Without written approval of Shenzhen CTB Testing Technology Co., Ltd. this report can't be reproduced except in full. The tested sample(s) and the sample information are provided by the client. "*" indicates the testing items were fulfilled by subcontracted lab. "#" indicates the items are not in CNAS accreditation scope.

TABLE OF CONTENT

Test Report Declaration Page
1. VERSION 3
2. TEST SUMMARY 4
3. MEASUREMENT UNCERTAINTY 5
4. PRODUCT INFORMATION AND TEST SETUP 6
4.1 Product Information 6
4.2 Test Setup Configuration 6
4.3 Support Equipment 7
4.4 Channel List 8
4.5 Test Mode 8
4.6 Test Environment 9
5. TEST FACILITY AND TEST INSTRUMENT USED 10
5.1 Test Facility 10
5.2 Test Instrument Used 10
6. TECHNICAL REQUIREMENTS FOR DFS 12
6.1 Applicability of DFS Requirements 12
6.2 DFS Detection Thresholds and Response Requirement 12
6.3 Radar Test Waveforms 13
7. DFS DETECTION THRESHOLD LEVELS 19
8. CONDUCTED TEST PROCEDURE 20
9. EUT TEST SETUP PHOTOGRAPHS 22

(Note: N/A means not applicable)

1. VERSION

Report No.	Issue Date	Description	Approved
CTB25072209305RF05	Aug. 14, 2025	Original	Valid

2. TEST SUMMARY

The Product has been tested according to the following specifications:

Test Item	Test Requirement	Test method	Result
DFS Detection Threshold	47 CFR Part 15 Subpart E Section 15.407 (h)(2)	KDB 905462 D02	N/A
Channel Availability Check Time	47 CFR Part 15 Subpart E Section 15.407 (h)(2)(ii)	KDB 905462 D02	N/A
U-NII Detection Bandwidth	47 CFR Part 15 Subpart E Section 15.407 (h)(2)	KDB 905462 D02	N/A
Channel Closing Transmission Time	47 CFR Part 15 Subpart E Section 15.407 (h)(2)(iii)	KDB 905462 D02	PASS
Channel Move Time	47 CFR Part 15 Subpart E Section 15.407 (h)(2)(iii)	KDB 905462 D02	PASS
Non-Occupancy Period	47 CFR Part 15 Subpart E Section 15.407 (h)(2)(iv)	KDB 905462 D02	PASS

Remark:
The tested sample and the sample information are provided by the client.
Tx: In this whole report Tx (or tx) means Transmitter.
Rx: In this whole report Rx (or rx) means Receiver.
RF: In this whole report RF means Radiated Frequency.
CH: In this whole report CH means channel.
Volt: In this whole report Volt means Voltage.
Temp: In this whole report Temp means Temperature.
Humid: In this whole report Humid means humidity.
Press: In this whole report Press means Pressure.
N/A: In this whole report not application.

3. MEASUREMENT UNCERTAINTY

Where relevant, the following measurement uncertainty levels have been estimated for tests performed on the Product as specified in CISPR 16-4-2. This uncertainty represents an expanded uncertainty expressed at approximately the 95% confidence level using a coverage factor of k=2.

No.	Item	Uncertainty
1	Occupancy bandwidth	U=±54.3Hz
2	Adjacent channel power	U=±1.3dB
3	Conducted Adjacent channel power	U=±1.38dB
4	Conducted output power Above 1G	U=±1.0dB
5	Conducted output power below 1G	U=±0.9dB
6	Power Spectral Density , Conduction	U=±1.0dB
7	Conduction spurious emissions	U=±2.8dB
8	Out of band emission	U=±54Hz
9	3m camber Radiated spurious emission(30MHz-1GHz)	U=±4.3dB
10	3m chamber Radiated spurious emission(1GHz-18GHz)	U=±4.5dB
11	humidity uncertainty	U=±5.3%
12	Temperature uncertainty	U=±0.59℃
13	Supply volyages	U=±3%
14	Time	U=±5%

4. PRODUCT INFORMATION AND TEST SETUP

4.1 Product Information

Model(s):	M1-101RT-A1
Model Description:	N/A
Wi-Fi Specification:	IEEE 802.11a/n/ac/ax
Hardware Version:	V3.1
Software Version:	Android 14
Operation Frequency:	IEEE 802.11a/n/ac(20M): 5250MHz ~5350 MHz/ 4 channel IEEE802.11n/ac(40M): 5250MHz ~5350 MHz/ 2 channel IEEE802.11ac(80M): 5250MHz ~5350 MHz/ 1 channel IEEE 802.11a/n/ac(20M): 5470MHz ~5725 MHz/ 11 channel IEEE802.11n/ac(40M): 5470MHz ~5725 MHz/ 5 channel IEEE802.11ac(80M): 5470MHz ~5725 MHz/ 3 channel
Type of Modulation:	WiFi: OFDM, OFDMA
Antenna installation:	WiFi: FPC antenna
Antenna Gain:	WiFi (5.3G): ANT1: 4.81dBi, ANT2: 3.15dBi WiFi (5.6G): ANT1: 4.86dBi, ANT2: 3.67dBi
Ratings:	9V/2A(first); 5V/3A (second) DC 4.35V battery

4.2 Test Setup Configuration

See test photographs attached in EUT TEST SETUP PHOTOGRAPHS for the actual connections between Product and support equipment.

4.3 Support Equipment

Item	Equipment	Mfr/Brand	Model/Type No.	Series No.	Note
1	Monitor	DELL	SE2218HV	N/A	AE
2	Adapter	FUJIA	FJ-SW618P21E	Input: AC 100-240V 50/60Hz 0.6A Max Output: 5V⎓3A 15W Max or 9V⎓2.22A 19.98W Max or 12V⎓1.67A 20.04W Max	☒ Applicant ☐CTB
3	AX1800 Mesh Wi-Fi 6 Router	D-Link	FCC ID: KA2IRX1960B1	N/A	AE

Notes:

1. All the equipment/cables were placed in the worst-case configuration to maximize the emission during the test.
2. Grounding was established in accordance with the manufacturer's requirements and conditions for the intended use.

4.4 Channel List

For 802.11a/n/ac(20M) Operation in the 5250MHz ~5350 MHz band			
Channel	Frequency	Channel	Frequency
52	5260MHz	60	5300MHz
56	5280MHz	64	5320MHz
For 802.11a/n/ac(20M) Operation in the 5470MHz ~5725 MHz band			
Channel	Frequency	Channel	Frequency
100	5500MHz	124	5620 MHz
104	5520MHz	128	5640 MHz
108	5540MHz	132	5660 MHz
112	5560MHz	136	5680MHz
116	5580MHz	140	5700MHz
120	5600 MHz		

For 802.11n/ac(40M) Operation in the 5250MHz ~5350 MHz band			
Channel	Frequency	Channel	Frequency
54	5270MHz	62	5310MHz
For 802.11n/ac(40M) Operation in the 5470MHz ~5725 MHz band			
Channel	Frequency	Channel	Frequency
102	5510MHz	126	5630MHz
110	5550MHz	134	5670MHz
118	5590MHz		

For 802.11ac(80M) Operation in the 5250MHz ~5350 MHz band			
Channel	Frequency	Channel	Frequency
58	5290MHz	NA	NA
For 802.11ac(80M) Operation in the 5470MHz ~5725 MHz band			
Channel	Frequency	Channel	Frequency
106	5530MHz	138	5690MHz
122	5610 MHz		

4.5 Test Mode

All test mode(s) and condition(s) mentioned were considered and evaluated respectively by performing full tests, the worst data were recorded and reported.

802.11a/n/ac(20M)	5250MHz ~5350 MHz	Channel 52	Channel 56	Channel 64
		5260MHz	5280MHz	5320MHz
802.11n/ac(40M)	5250MHz ~5350 MHz	Channel54	N/A	Channel62
		5270MHz	N/A	5310MHz
802.11ac(80M)	5250MHz ~5350 MHz	N/A	Channel 58	N/A
		N/A	5290MHz	N/A
802.11a/n/ac(20M)	5470MHz ~5725 MHz	Channel 100	Channel116	Channel140
		5500MHz	5580MHz	5700MHz
802.11n/ac(40M)	5470MHz ~5725 MHz	Channel 102	Channel118	Channel 134
		5510MHz	5590MHz	5670MHz
802.11ac(80M)	5470MHz ~5725 MHz	Channel 106	N/A	Channel 138
		5530MHz	N/A	5690MHz

4.6 Test Environment

Humidity(%):	54
Atmospheric Pressure(kPa):	101
Normal Voltage(AC):NV	120V
Normal Temperature(℃):NT	23
Low Temperature(℃):LT	0
High Temperature(℃):HT	40

5. TEST FACILITY AND TEST INSTRUMENT USED

5.1 Test Facility

All measurement facilities used to collect the measurement data are located at 1&2F., Building A, No. 26, Xinhe Road, Xinqiao, Xinqiao Street, Bao'an District, Shenzhen, Guangdong, China. The site and apparatus are constructed in conformance with the requirements of ANSI C63.4 and CISPR 16-1-1 other equivalent standards.

FCC Test Firm Registration Number: CN1276

5.2 Test Instrument Used

No.	Equipment	Manufacturer	Type No.	Serial No.	Firmware Version	Calibrated Date	Calibrated until
1	Spectrum Analyzer	Agilent	N9020A	MY52090073	A.14.16	2025/5/23	2026/5/22
2	Power Sensor	Agilent	U2021XA	MY56120032	/	2025/5/23	2026/5/22
3	Power Sensor	Agilent	U2021XA	MY56120034	/	2025/5/23	2026/5/22
4	Communication test set	R&S	CMW500	108058	V3.5.80	2025/5/23	2026/5/22
5	Spectrum Analyzer	KEYSIGHT	N9020A	MY51289897	A.14.16	2025/5/23	2026/5/22
6	Signal Generator	Agilent	N5181A	MY50140365	A.01.60	2025/5/22	2026/5/21
7	Vector signal generator	Agilent	N5182A	MY47420195	A.01.87	2025/5/22	2026/5/21
8	Communication test set	Agilent	E5515C	MY50102567	B.19.07 （E1962B ）	2025/5/22	2026/5/21
9	2.4 GHz Filter	Shenxiang	MSF2400-2483.5MS-1154	20181015001	/	2025/6/18	2026/6/17
10	5 GHz Filter	Shenxiang	MSF5150-5850 MS-1155	20181015001	/	2025/6/18	2026/6/17
11	Filter	Xingbo	XBLBQ-DZA120	190821-1-1	/	2025/5/24	2026/5/23
12	BT&WI-FI Automatic test software	Micowave	MTS8310	Ver. 2.0.0.0	/	/	/
13	Rohde & Schwarz SFU Broadcast Test System	R&S	SFU	101017	/	2024/10/31	2025/10/30
14	Temperature humidity chamber	Hongjing	TH-80CH	DG-15174	/	2025/5/22	2026/5/21
15	234G Automatic test software	Micowave	MTS8200	Ver. 2.0.0.0	/	/	/
16	966 chamber	C.R.T.	966	/	/	2024/6/23	2027/6/22

17	Receiver	R&S	ESPI	100362	RF_ATTEN_7（104489/003）	2025/5/23	2026/5/22
18	Amplifier	HP	8447E	2945A02747	/	2025/5/23	2026/5/22
19	Amplifier	Agilent	8449B	3008A01838	/	2025/6/2	2026/6/1
20	TRILOG Broadband Antenna	Schwarzbeck	VULB 9168	00869	/	2025/6/29	2026/6/28
21	Double Ridged Broadband Horn Antenna	Schwarzbeck	BBHA9120D	01911	/	2025/6/1	2026/5/31
22	EMI test software	Fala	EZ-EMC	FA-03A2 RE	/	/	/
23	Loop Antenna	Schwarzbeck	FMZB 1519B	1519B-224	/	2025/6/2	2026/6/1
24	loop antenna	ZHINAN	ZN30900A	GTS534	/	/	/
25	40G Horn antenna	A/H/System	SAS-574	588	/	2025/6/2	2026/6/1
26	Amplifier	AEROFLEX	Aeroflex	097	/	2025/6/2	2026/6/1
27	Power Metter	KEYSIGHT	N1912AP	N/A	A.05.00	2025/6/2	2026/6/1

6. TECHNICAL REQUIREMENTS FOR DFS

6.1 Applicability of DFS Requirements

6.1.1 Applicability of DFS Requirements Prior to use of a Channel

Requirement	Operational Mode		
	Master	Client Without Radar Detection	Client With Radar Detection
Non-Occupancy Period	Yes	Not required	Yes
DFS Detection Threshold	Yes	Not required	Yes
Channel Availability Check Time	Yes	Not required	Not required
U-NII Detection Bandwidth	Yes	Not required	Yes

6.1.2 Applicability of DFS Requirements during Normal Operation

Requirement	Operational Mode	
	Master or Client With Radar Detection	Client Without Radar Detection
DFS Detection Threshold	Yes	Not required
Channel Closing Transmission Time	Yes	Yes
Channel Move Time	Yes	Yes
U-NII Detection Bandwidth	Yes	Not required

Additional requirements for devices with multiple bandwidth modes	Operational Mode	
	Master or Client With Radar Detection	Client Without Radar Detection
U-NII Detection Bandwidth and Statistical Performance Check	All BW modes must be tested	Not required
Channel Move Time and Channel Closing Transmission Time	Test using widest BW mode available	Test using the widest BW mode available for the link
All other tests	Any single BW mode	Not required
Note: Frequencies selected for statistical performance check (Section 7.8.4) should include several frequencies within the radar detection bandwidth and frequencies near the edge of the radar detection bandwidth. For 802.11 devices it is suggested to select frequencies in each of the bonded 20 MHz channels and the channel center frequency.		

6.2 DFS Detection Thresholds and Response Requirement

Below table provides the DFS Detection Thresholds for Master Devices as well as Client Devices incorporating In-Service Monitoring.

DFS Detection Thresholds for Master Devices and Client Devices With Radar Detection.

Maximum Transmit Power	Value (See Notes 1 , 2 and 3)
EIRP ≥ 200 milliwatt	-64 dBm
EIRP < 200 milliwatt and power spectral density < 10 dBm / MHz	-62 dBm
EIRP < 200 milliwatt and that do not meet the power spectral density requirement	-64 dBm
Note 1: This is the level at the input of the receiver assuming a 0 dBi receive antenna. Note 2: Throughout these test procedures an additional 1 dB has been added to the amplitude of the test transmission waveforms to account for variations in measurement equipment. This will ensure that the test signal is at or above the detection threshold level to trigger a DFS response. Note3: EIRP is based on the highest antenna gain. For MIMO devices refer to KDB Publication 662911 D01.	

DFS Response Requirement Values

Parameter	Value
Non-occupancy period	Minimum 30 minutes.
Channel Availability Check Time	60 seconds.
Channel Move Time	10 seconds. (See Note 1.)
Channel Closing Transmission Time	200 milliseconds + an aggregate of 60 milliseconds over remaining 10 second period. (See Notes 1 and 2.)
U-NII Detection Bandwidth	Minimum 100% of the U- NII 99% transmission power bandwidth. (See Note 3.)
Note 1: Channel Move Time and the Channel Closing Transmission Time should be performed with Radar Type 0. The measurement timing begins at the end of the Radar Type 0 burst. Note 2: The Channel Closing Transmission Time is comprised of 200 milliseconds starting at the beginning of the Channel Move Time plus any additional intermittent control signals required to facilitate a Channel move (an aggregate of 60 milliseconds) during the remainder of the 10 second period. The aggregate duration of control signals will not count quiet periods in between transmissions. Note 3: During the U-NII Detection Bandwidth detection test, radar type 0 should be used. For each frequency step the minimum percentage of detection is 90 percent. Measurements are performed with no data traffic.	

6.3 Radar Test Waveforms

This section provides the parameters for required test waveforms, minimum percentage of successful detections, and the minimum number of trials that must be used for determining DFS conformance. Step intervals of 0.1 microsecond for Pulse Width, 1 microsecond for PRI, 1 MHz for chirp width and 1 for the number of pulses will be utilized for the random determination of specific test waveforms.

6.3.1 Short Pulse Radar Test Waveforms

Radar Type	Pulse Width (μsec)	PRI (μsec)	Number of Pulses	Minimum Percentage of Successful Detection	Minimum Number of Trials
0	1	1428	18	See Note1	See Note1
1		Test A: 15 unique PRI values randomly selected from the list of 23 PRI values in Table 5a	$\text{Roundup}\left\{\left(\frac{1}{360}\right)\cdot\left(\frac{19\cdot 10^6}{\text{PRI}_{\mu sec}}\right)\right\}$	60%	30
		Test B: 15 unique PRI values randomly selected within the range of 518-3066 μsec, with a minimum increment of 1			

		µsec, excluding PRI values selected in Test A			
2	1-5	150-230	23-29	60%	30
3	6-10	200-500	16-18	60%	30
4	1-20	200-500	12-16	60%	30
Aggregate (Radar Types 1-4)				80%	120
Note 1: Short Pulse Radar Type 0 should be used for the detection bandwidth test, channel move time, and channel closing time tests.					

A minimum of 30 unique waveforms are required for each of the Short Pulse Radar Types 2 through 4. If more than 30 waveforms are used for Short Pulse Radar Types 2 through 4, then each additional waveform must also be unique and not repeated from the previous waveforms. If more than 30 waveforms are used for Short Pulse Radar Type 1, then each additional waveform is generated with Test B and must also be unique and not repeated from the previous waveforms in Tests A or B.

Pulse Repetition Intervals Values for Test A

Pulse Repetition Frequency Number	Pulse Repetition Frequency (Pulses Per Second)	Pulse Repetition Interval (Microseconds)
1	1930.5	518
2	1858.7	538
3	1792.1	558
4	1730.1	578
5	1672.2	598
6	1618.1	618
7	1567.4	638
8	1519.8	658
9	1474.9	678
10	1432.7	698
11	1392.8	718
12	1355	738
13	1319.3	758
14	1285.3	778
15	1253.1	798
16	1222.5	818
17	1193.3	838
18	1165.6	858
19	1139	878
20	1113.6	898
21	1089.3	918
22	1066.1	938
23	326.2	3066

6.3.2 Long Pulse Radar Test Waveform

Radar Type	Pulse Width (μsec)	Chirp Width (MHz)	PRI (μsec)	Number of Pulses per Burst	Number of Bursts	Minimum Percentage of Successful Detection	Minimum Number of Trials
5	50-100	5-20	1000-2000	1-3	8-20	80%	30

The parameters for this waveform are randomly chosen. Thirty unique waveforms are required for the Long Pulse Radar Type waveforms. If more than 30 waveforms are used for the Long Pulse Radar Type waveforms, then each additional waveform must also be unique and not repeated from the previous waveforms.

Each waveform is defined as follows:
1) The transmission period for the Long Pulse Radar test signal is 12 seconds.
2) There are a total of 8 to 20 Bursts in the 12 second period, with the number of Bursts being randomly chosen. This number is Burst Count.
3) Each Burst consists of 1 to 3 pulses, with the number of pulses being randomly chosen. Each Burst within the 12 second sequence may have a different number of pulses.
4) The pulse width is between 50 and 100 microseconds, with the pulse width being randomly chosen. Each pulse within a Burst will have the same pulse width. Pulses in different Bursts may have different pulse widths.
5) Each pulse has a linear frequency modulated chirp between 5 and 20 MHz, with the chirp width being randomly chosen. Each pulse within a transmission period will have the same chirp width. The chirp is centered on the pulse. For example, with a radar frequency of 5300 MHz and a 20 MHz chirped signal, the chirp starts at 5290 MHz and ends at 5310 MHz.
6) If more than one pulse is present in a Burst, the time between the pulses will be between 1000 and 2000 microseconds, with the time being randomly chosen. If three pulses are present in a Burst, the random time interval between the first and second pulses is chosen independently of the random time interval between the second and third pulses.
7) The 12 second transmission period is divided into even intervals. The number of intervals is equal to Burst Count. Each interval is of length (12,000,000 / Burst Count) microseconds. Each interval contains one Burst. The start time for the Burst, relative to the beginning of the interval, is between 1 and [(12,000,000 / Burst Count) – (Total Burst Length) + (One Random PRI Interval)] microseconds, with the start time being randomly chosen. The step interval for the start time is 1 microsecond. The start time for each Burst is chosen randomly.

A representative example of a Long Pulse Radar Type waveform:
1) The total test waveform length is 12 seconds.
2) Eight (8) Bursts are randomly generated for the Burst Count.
3) Burst 1 has 2 randomly generated pulses.
4) The pulse width (for both pulses) is randomly selected to be 75 microseconds.
5) The PRI is randomly selected to be at 1213 microseconds.
6) Bursts 2 through 8 are generated using steps 3 – 5.
7) Each Burst is contained in even intervals of 1,500,000 microseconds. The starting location for Pulse 1, Burst 1 is randomly generated (1 to 1,500,000 minus the total Burst 1 length + 1 random PRI interval) at the 325,001 microsecond step. Bursts 2 through 8 randomly fall in successive 1,500,000 microsecond intervals (i.e. Burst 2 falls in the 1,500,001 – 3,000,000 microsecond range).

Graphical representation of the Long Pulse Radar Test Waveform.

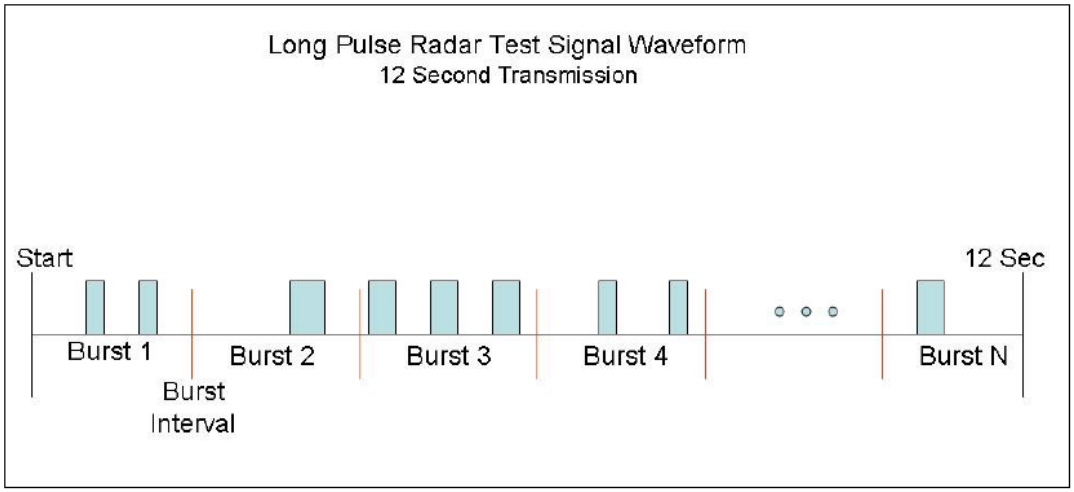

6.3.3 Frequency Hopping Radar Test Waveform

Radar Type	Pulse Width (µsec)	PRI (µsec)	Pulses per Hop	Hopping Rate (kHz)	Hopping Sequence Length (msec)	Minimum Percentage of Successful Detection	Minimum Number of Trials
6	1	333	9	0.333	300	70%	30

For the Frequency Hopping Radar Type, the same *Burst* parameters are used for each waveform. The hopping sequence is different for each waveform and a 100-length segment is selected from the hopping sequence defined by the following algorithm:
The first frequency in a hopping sequence is selected randomly from the group of 475 integer frequencies from 5250 – 5724 MHz. Next, the frequency that was just chosen is removed from the group and a frequency is randomly selected from the remaining 474 frequencies in the group. This process continues until all 475 frequencies are chosen for the set. For selection of a random frequency, the frequencies remaining within the group are always treated as equally likely

Radar Waveform Calibration

The following equipment setup was used to calibrate the conducted radar waveform. A spectrum analyzer was used to establish the test signal level for each radar type. During this process there were replace 50ohm terminal from master and client device and no transmissions by either the master or client device. The spectrum analyzer was switched to the zero span (time domain) at the frequency of the radar waveform generator. Peak detection was utilized. The spectrum analyzer resolution bandwidth (RBW) and video bandwidth (VBW) were set to 3MHz and 3 MHz.
The signal generator amplitude was set so that the power level measured at the spectrum analyzer was -61dBm due to the interference threshold level is not required

6.3.4 DFS test setup

Setup for Master with injection at the Master

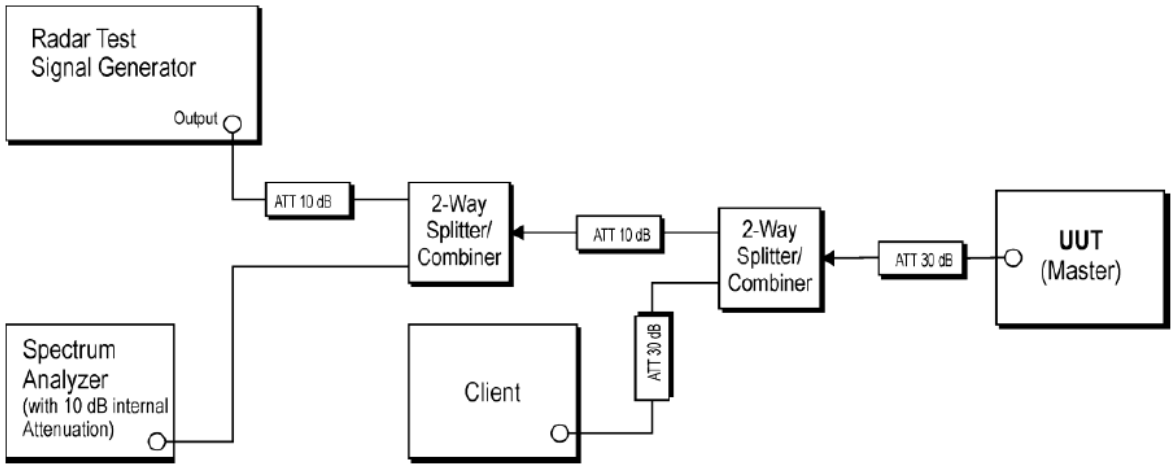

Setup for Client with injection at the Master

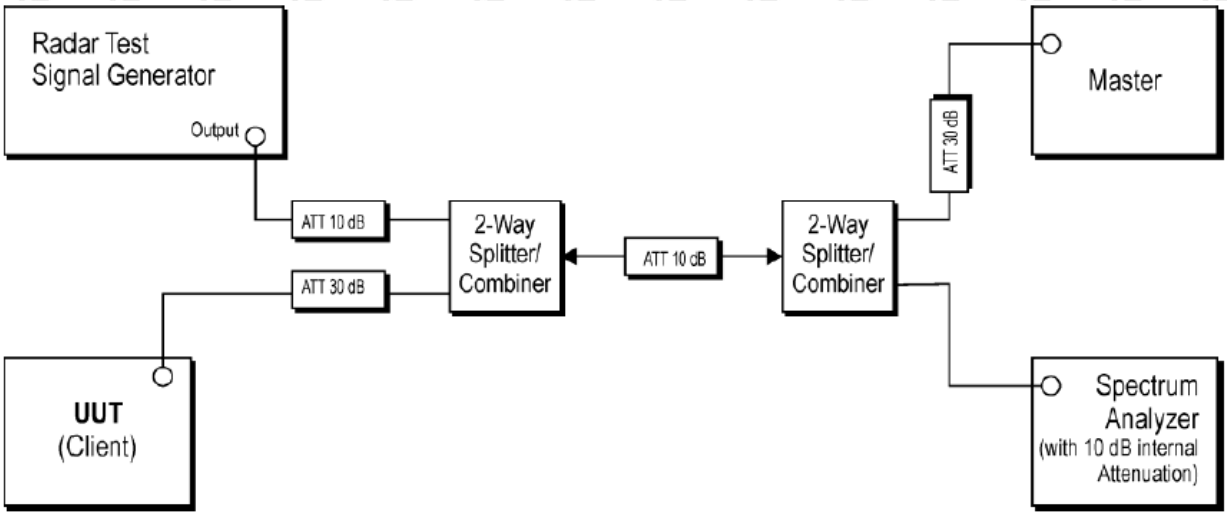

Setup for Client with injection at the Client

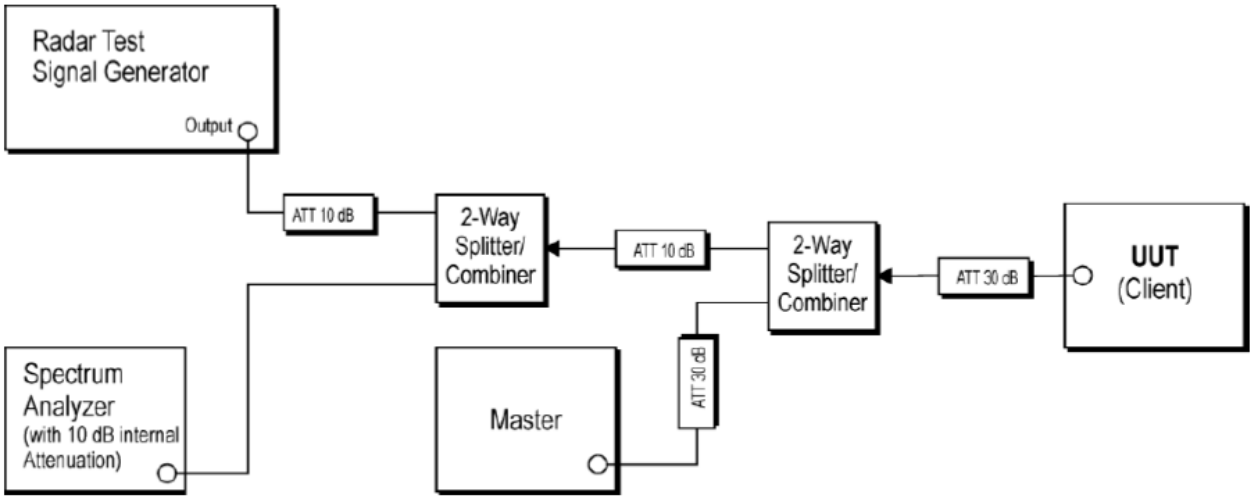

6.3.5 Channel Loading/Data Streaming

Timing plots are required with calculations demonstrating a minimum channel loading of approximately 17% or greater.

Frequency	Bandwidth	Time On	Time On + Off Time	channel loading	Requirements	Results
5290	80M	4.601	18.32	25.11%	17 %	PASS
5690	80M	4.718	19.15	24.64%	17 %	PASS

Remarks: Connect the test computer to the router 5G WIFI, open the router Settings in the Internet Explorer web page, IP is 192.168.10.1:, through the software TFGEN1.0.EXE

7. DFS DETECTION THRESHOLD LEVELS

Test result:

DFS Threshold level: -63 dBm
The Interference Radar Detection Threshold Level is (-64dBm) +(4.86)[dBi]+ 1 dB= -58.14 dBm. That ad been taken into account the master output power range and antenna gain.

Calibration plots for each of the required radar waveforms

Radar type0

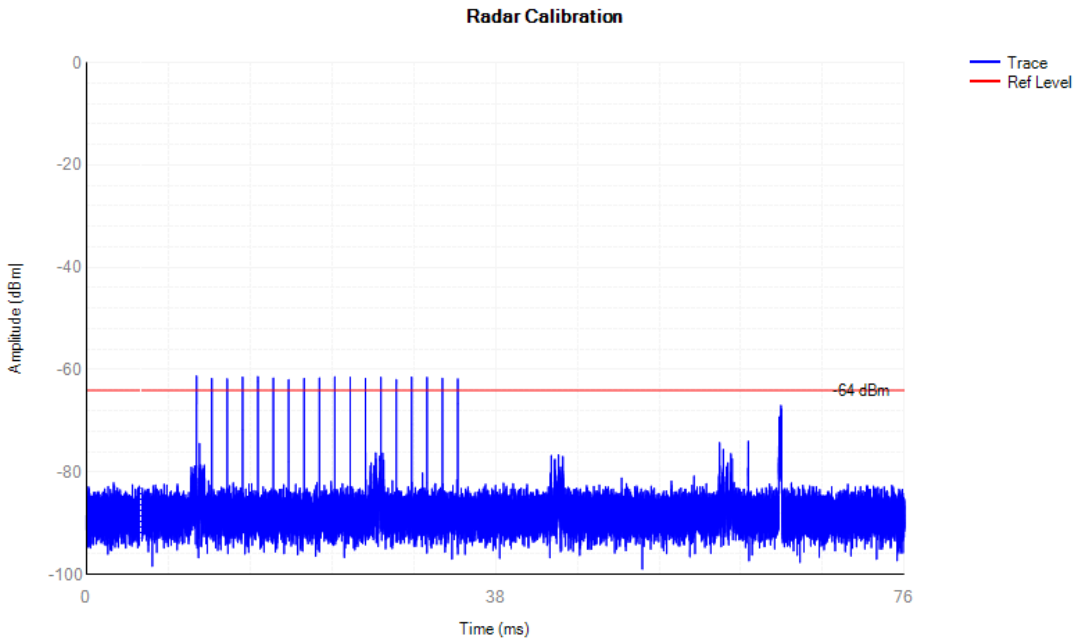

8. CONDUCTED TEST PROCEDURE

1) One frequency will be chosen from the Operating Channels of the UUT within the 5250-5350 MHz or 5470-5725MHz bands.
2) The Client Device (EUT) is set up the above diagram and communications between the Master device and the Client is established.
3) Stream the channel loading test file from the Master Device to the Client Device on the test Channel for the entire period of the test.
4) An additional 1 dB is added to the radar test signal to ensure it is at or above the DFS Detection Threshold, accounting for equipment variations/errors.
5) Observe the transmissions of the UUT at the end of the Burst on the Operating Channel for duration greater than 12 seconds for Radar Type 0 to ensure detection occurs.
6) After the initial radar burst the channel is monitored for 30 minutes to ensure no transmissions or beacons occur. A second monitoring setup is used to verify that the Master and Client have both moved to different channels.

Test Results:
Radar Type 0 Channel Move Time

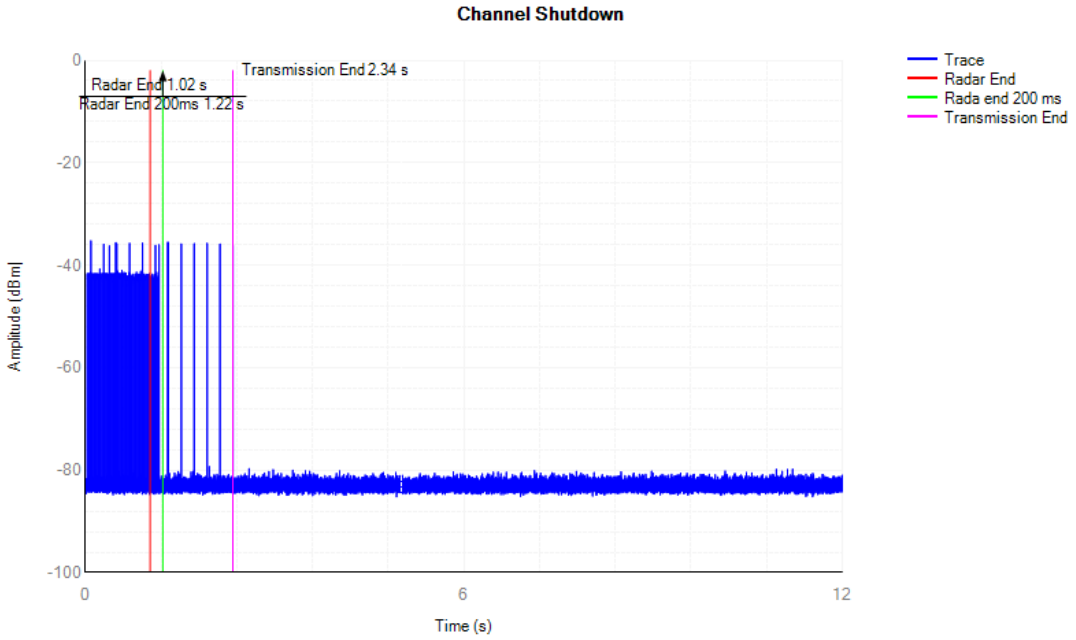

Radar Type 0 Channel Closing Transmissiom

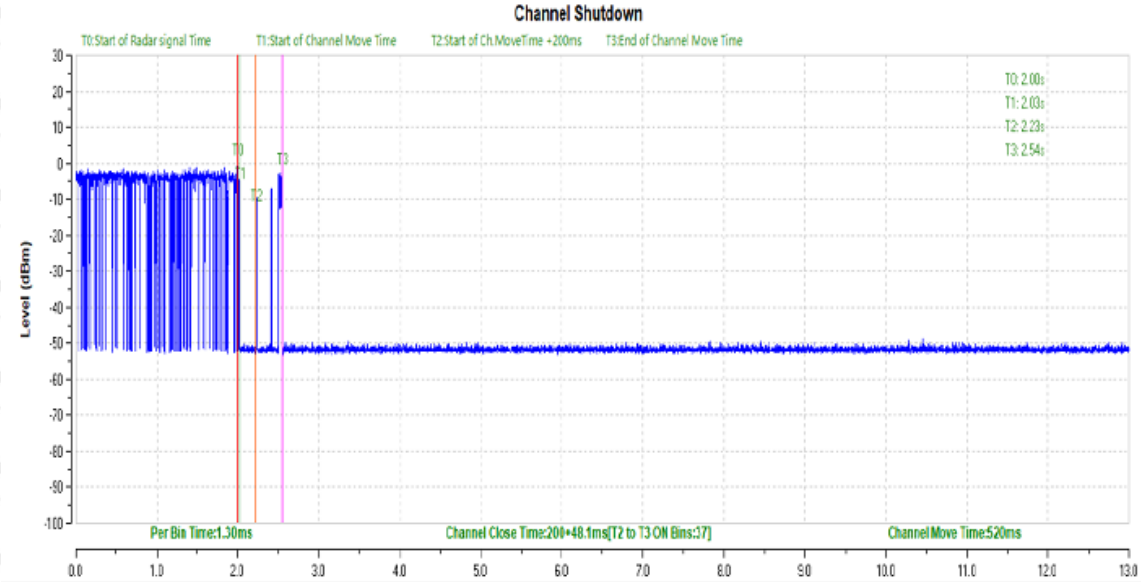

Non-occupancy Period Period(without radar detection)

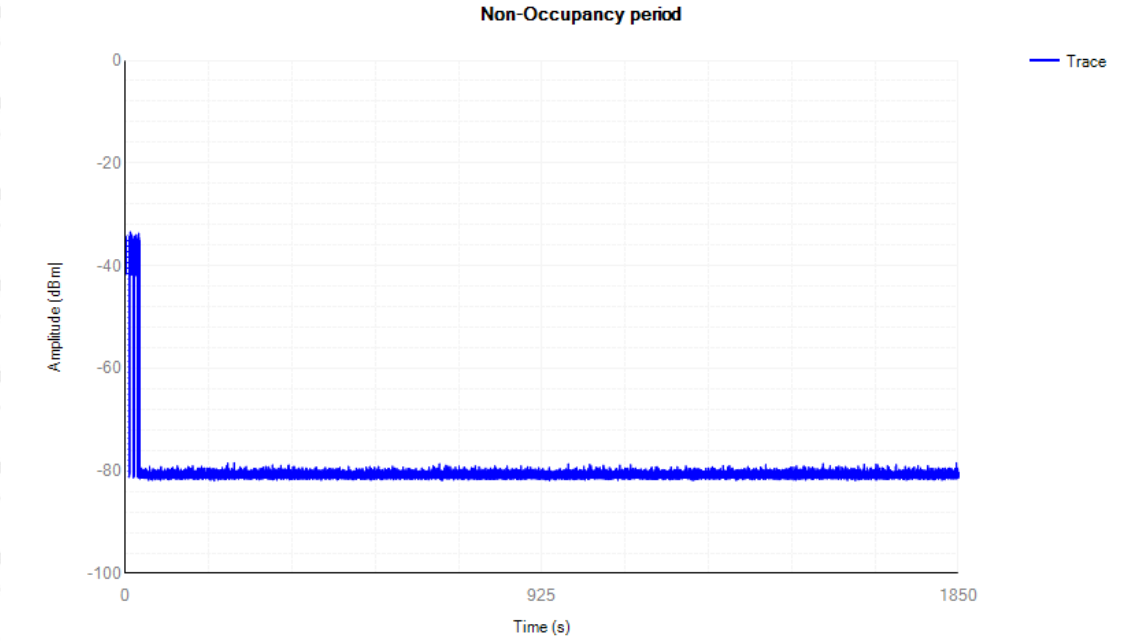

Test Item	Modulation Mode	Freq. (MHz)	Limit	Results
Channel Move Time	AC80	5690	10s	Pass
Channel Closing Transmission Time	AC80	5690	60ms	Pass
Non-Occupancy Period	AC80	5690	30 minutes	Pass

9. EUT TEST SETUP PHOTOGRAPHS

※※※※※ **END OF REPORT** ※※※※※