Index

1.			**General *Description***	**1**
2.			***Electrical Specifications***	**2**
	2-1		***Set-up***	**2**
		2-1-1	*Frequency Band*	**2**
		2-1-2	*Impedance*	**2**
		2-1-3	*Matching Requirements*	**2**
		2-1-4	*VSWR*	**2**
	2-2		***Test Data***	**3to4**
		2-2-1	*VSWR*	**3**
		2-2-2	*TRP&TIS*	**4**
3.			***Mechanical Specification***	**5to7**
	3-1		***Mechanical Configuration***	**5**
		3-1-1	***Mechanical Configuration***	**5**
		3-1-2	***Mechanical Configuration***	**6**
	3-2		***Measurement Data***	**7**
	3-3		***Salt-Spray Test***	**7**
4.			***Environment Characteristics***	**7**

ANTENNA SPECIFICATION0

1. General *Description*

This report summarizes the electrical performance results of the proposed Internal antenna to support the F12（BT） program. The antenna is an assembly BT 2.4G.

2. Electrical Specifications

2-1 Set-up

2-1-1 Frequency Band

Frequency Band	Tx(MHz)	Rx(MHz)
BT	**2400-2450-2500**	

2-1-2 Impedance

Nominal Impedance(including matching circuit) : 50 ohms

2-1-3 Matching Requirements

The matching circuit on the PCB of the handset is according to Figure 1

Optimum matching circuit is highly dependent on the handset and thus.

Final matching circuit layout and values will be defined when handset is available.

客供

2-1-4 VSWR And GAIN

VSWR			**GAIN**		
Freq. Band	OPEN	SPEC	**Band Freq.**	**OPEN**	**SPEC**

2400MHz	**≦2.5**	2400MHz	**≧-1.0dBi**
2450MHz	**≦2.0**	2450MHz	**≧0.5dBi**
2500MHz	**≦2.0**	2500MHz	**≧-1.0dBi**

※Measuring a 50Ω test jig is connected to a network analyzer to measure the VSWR

※※All test value is done in customer approval fixture.

2-2 Test Data

2-2-1 BT VSWR

Model No:	**File:**
CREDITS NO:	Note: BT-VSWR
Sample No:	
Test Condition: Free Space	Matching: 客供
Confirmation:	Engineer:

2-2-2 BT GAIN&EFF

Passive Test For BT										
Freq (MHz)	Effi (%)	Effi (dB)	Gain (dBi)	Gain (dBd)	UHIS (%)	DHIS (%)	Max (dB)	Min (dB)	irectivit (dBi)	Beamwidth (3dB)
2400	38.15	-4.18	1	-1.15	16.755	21.397	1	-11.33	5.18	0
2410	37.93	-4.21	0.98	-1.17	16.611	21.323	0.98	-11.36	5.19	0
2420	36.91	-4.33	0.91	-1.24	16.003	20.912	0.91	-11.57	5.24	0
2430	35.46	-4.5	0.76	-1.39	15.253	20.212	0.76	-11.84	5.27	0
2440	35.09	-4.55	0.72	-1.43	15.089	20	0.72	-11.91	5.26	0
2450	34.57	-4.61	0.69	-1.46	14.837	19.732	0.69	-11.94	5.3	0
2460	33.34	-4.77	0.55	-1.6	14.206	19.138	0.55	-12.16	5.32	0
2470	33.25	-4.78	0.55	-1.6	14.145	19.101	0.55	-12.11	5.33	0
2480	32.71	-4.85	0.48	-1.67	13.964	18.746	0.48	-12.08	5.34	0
2490	31.93	-4.96	0.4	-1.75	13.566	18.364	0.4	-12.1	5.36	30
2500	32.01	-4.95	0.44	-1.71	13.496	18.512	0.44	-12.12	5.38	30

ANTENNA SPECIFICATION0

2400.000MHz

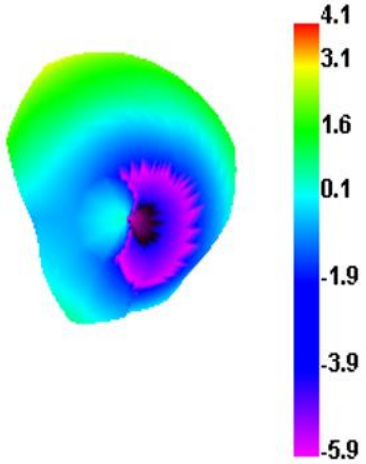

2400.000MHz E1

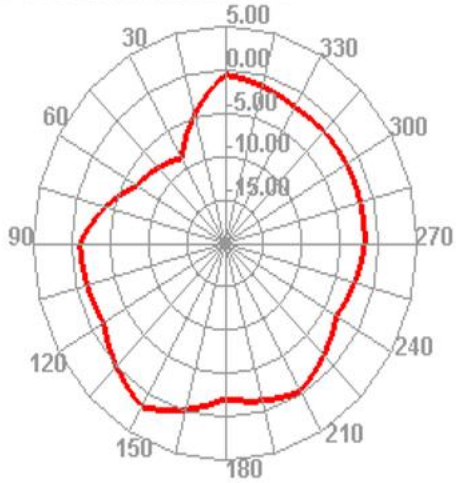

3. Mechanical Specification

3-1-1 ***Mechanical Configuration(组装图)***

3-2 ***Measurement Data***

3-3 ***Salt-Spray test***

35℃, 85%RH, 48Hours(According to MIL-STD-810E)The salt-spray is generated from a 5% salt solution., The VSWR, Gain, Radiation Pattern must be met specifications after the salt-spray test.

4. Environment Characteristic

NO.	ITEM	TEST CONDITION	SPECIFICATION
4-1	High Temperature/Humidity Storage Test(non operating)	1.Temperature: +70 ±2℃ 2.Humidity: 90~95%RH 3.Time: 48hrs	No material deformation is allowed.

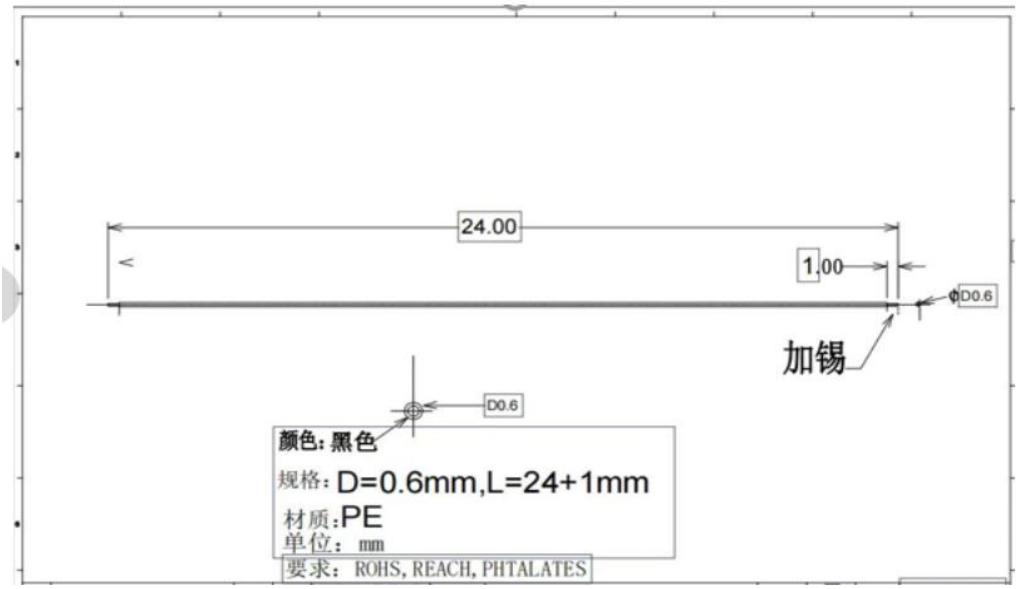

The VSWR, Gain, Radiation Pattern must be met specifications after these test.

4-2	Low Temperature/Humidity Storage Test(non operating)	1.Temperature: -30±2℃ 2.Humidity: 0%RH 3.Time:48hrs	