FCC Test Report

Test Report
On Behalf of
Shenzhen Xiaodong Innovation Technology Co.,Ltd
For
Magnetic wireless charging station
Model No.: XD-CE06

FCC ID: 2BBW7-XD-CE06

Prepared For :	**Shenzhen Xiaodong Innovation Technology Co.,Ltd** **C1513 Chuangxin Plaza, No. 2007, Pingshandadao, Pingshan District, Shenzhen, China**
Prepared By :	**Shenzhen HUAK Testing Technology Co., Ltd.** **1-2/F., Building B2, Junfeng Zhongcheng Zhizao Innovation Park, Heping, Fuhai Street, Bao'an District, Shenzhen, Guangdong, China**
Date of Test:	**Oct. 26, 2023 ~ Nov. 02, 2023**
Date of Report:	**Nov. 02, 2023**
Report Number:	**HK2310265030-1E**

The results shown in this test report refer only to the sample(s) tested unless otherwise stated and the sample(s) are retained for 30 days only. The document is issued by HUAK, this document cannot be reproduced except in full with our prior written permission. The more details and the authenticity of the report will be confirmed at http://www.cer-mark.com.

Test Result Certification

Applicant's Name..... : Shenzhen Xiaodong Innovation Technology Co.,Ltd

Address..... : C1513 Chuangxin Plaza, No. 2007, Pingshandadao, Pingshan District, Shenzhen, China

Manufacture's Name..... : Shenzhen Xiaodong Innovation Technology Co.,Ltd

Address..... : C1513 Chuangxin Plaza, No. 2007, Pingshandadao, Pingshan District, Shenzhen, China

Product Description

Trade Mark..... : N/A

Product Name..... : Magnetic wireless charging station

Model and/or Type Reference: XD-CE06

Standards ..... : FCC CFR 47 PART 18

This publication may be reproduced in whole or in part for non-commercial purposes as long as the Shenzhen HUAK Testing Technology Co., Ltd. is acknowledged as copyright owner and source of the material. Shenzhen HUAK Testing Technology Co., Ltd. takes no responsibility for and will not assume liability for damages resulting from the reader's interpretation of the reproduced material due to its placement and context.

Date of Test.....:

Date (s) of performance of tests .....: **Oct. 26, 2023 ~ Nov. 02, 2023**

Date of Issue.....: **Nov. 02, 2023**

Test Result.....: **Pass**

Testing Engineer : Gary Qian

(Gary Qian)

Technical Manager : Eden Hu

(Eden Hu)

Authorized Signatory : Jason Zhou

(Jason Zhou)

Table of Contents **Page**

1 . Test Summary 5
1.1 . Test Procedures and Results 5
1.2 . Information of the Test Laboratory 5
1.3 . Measurement Uncertainty 5
2. General Information 6
2.1. General Description of EUT 6
2.2. Carrier Frequency of Channels 7
2.3. Test Mode 8
2.4. Description of Test Setup 9
2.5. Description of Support Units 10
2.6. Measurement Instruments List 11
3. Conducted Emission Test 12
3.1. Block Diagram of Test Setup 12
3.2. Conducted Power Line Emission Limit 12
3.3. Test Procedure 12
4. Radiated Emissions 15
4.1. Block Diagram of Test Setup 15
4.2. Rules and Specifications 16
4.3. Test Procedure 16
4.4. Test Result 16
5. Antenna Requirement 20
6. Photograph of Test 21
7. Photos of the EUT 23

The results shown in this test report refer only to the sample(s) tested unless otherwise stated and the sample(s) are retained for 30 days only. The document is issued by HUAK, this document cannot be reproduced except in full with our prior written permission. The more details and the authenticity of the report will be confirmed at http://www.cer-mark.com.

TEL : +86-755 2302 9901 FAX : +86-755 2302 9901 E-mail : service@cer-mark.com
Add: 1-2F., Building B2, Junfeng Zhongcheng Zhizao Innovation Park, Heping Community, Fuhai Street, Bao'an District, Shenzhen, Guangdong, China

** Modified History **

Revision	Description	Issued Data	Remark
Revision 1.0	Initial Test Report Release	Nov. 02, 2023	Jason Zhou

The results shown in this test report refer only to the sample(s) tested unless otherwise stated and the sample(s) are retained for 30 days only. The document is issued by HUAK, this document cannot be reproduced except in full with our prior written permission. The more details and the authenticity of the report will be confirmed at http://www.cer-mark.com.

TEL : +86-755 2302 9901 FAX : +86-755 2302 9901 E-mail : service@cer-mark.com
Add: 1-2F., Building B2, Junfeng Zhongcheng Zhizao Innovation Park, Heping Community, Fuhai Street, Bao'an District, Shenzhen, Guangdong, China

1. Test Summary

1.1. Test Procedures and Results

Description of Test	Section Number	Result
Conducted Emissions Test	18.307	COMPLIANT
Radiated Emission Test	18.305	COMPLIANT

Note:

1. PASS: Test item meets the requirement.

2. Fail: Test item does not meet the requirement.

3. N/A: Test case does not apply to the test object.

4. The test result judgment is decided by the limit of test standard.

1.2. Information of the Test Laboratory

Shenzhen HUAK Testing Technology Co., Ltd.
Add.: 1-2/F., Building B2, Junfeng Zhongcheng Zhizao Innovation Park, Heping, Fuhai Street, Bao'an District, Shenzhen, Guangdong, China

Testing Laboratory Authorization:
A2LA Accreditation Code is 4781.01.
FCC Designation Number is CXD-CE06229.
Canada IC CAB identifier is CN0045.
CNAS Registration Number is L9589.

1.3. Measurement Uncertainty

Measurement Uncertainty

Conducted Emission Expanded Uncertainty	=	2.71dB, k=2
Radiated emission expanded uncertainty(9kHz-30MHz)	=	3.90dB, k=2
Radiated emission expanded uncertainty(30MHz-1000MHz)	=	3.90dB, k=2
Radiated emission expanded uncertainty(Above 1GHz)	=	4.28dB, k=2

The results shown in this test report refer only to the sample(s) tested unless otherwise stated and the sample(s) are retained for 30 days only. The document is issued by HUAK, this document cannot be reproduced except in full with our prior written permission. The more details and the authenticity of the report will be confirmed at http://www.cer-mark.com.

2. General Information

2.1. General Description of EUT

Equipment:	Magnetic wireless charging station
Model Name:	XD-CE06
Series Models:	N/A
Model Difference:	N/A
Trade Mark:	N/A
FCC ID:	2BBW7-XD-CE06
Antenna Type:	Coil Antenna
Antenna Gain:	0dBi
Operation Frequency (Mobile Phone+ Earphones):	112KHz~205KHz
Operation Frequency (Watch):	314KHz
Test Frequency:	Mobile Phone: 128KHz Earphone: 135KHz Watch: 314KHz
Modulation Type:	ASK
Power Source:	Input: DC5V/3A, 9V/2.5A Phone Output: 15W (MAX) Earbuds Case Output: 5W (MAX) Watch Output: 2.5W (MAX)
Power Rating:	Input: DC5V/3A, 9V/2.5A Phone Output: 15W (MAX) Earbuds Case Output: 5W (MAX) Watch Output: 2.5W (MAX)
Note: The transfer system includes three coils, 3 coils can work individually or can work at the same time. All the situation has been tested, only the worst situation (ANT1+ANT2+ANT3 full load 15W) was recorded in the report.	

The results shown in this test report refer only to the sample(s) tested unless otherwise stated and the sample(s) are retained for 30 days only. The document is issued by HUAK, this document cannot be reproduced except in full with our prior written permission. The more details and the authenticity of the report will be confirmed at http://www.cer-mark.com.

2.2. Carrier Frequency of Channels

Operation Frequency each of channel	
Channel	Frequency
01	128KHz
02	135KHz
03	314KHz

The results shown in this test report refer only to the sample(s) tested unless otherwise stated and the sample(s) are retained for 30 days only. The document is issued by HUAK, this document cannot be reproduced except in full with our prior written permission. The more details and the authenticity of the report will be confirmed at http://www.cer-mark.com.

2.3. Test Mode

Test Item	Test Mode	Description
Radiated & Conducted Test Cases	Mode 1	AC/DC Adapter + EUT + Wireless load 1 (Null load) + Wireless load 2 (Full load) + Wireless load 3 (Full load)
	Mode 2	AC/DC Adapter + EUT + Wireless load 1 (Half load) + Wireless load 2 (Half load) + Wireless load 3 (Full load)
	Mode 3	AC/DC Adapter + EUT + Wireless load 1 (Full load) + Wireless load 2 (Null load) + Wireless load 3 (Full load)
	Mode 4	AC/DC Adapter + EUT + Wireless load 1 (Null load) + Wireless load 2 (Full load) + Wireless load 3 (Half load)
	Mode 5	AC/DC Adapter + EUT + Wireless load 1 (Half load) + Wireless load 2 (Half load) + Wireless load 3 (Half load)
	Mode 6	AC/DC Adapter + EUT + Wireless load 1 (Full load) + Wireless load 2 (Null load) + Wireless load 3 (Half load)
	Mode 7	AC/DC Adapter + EUT + Wireless load 1 (Null load) + Wireless load 2 (Full load) + Wireless load 3 (Null load)
	Mode 8	AC/DC Adapter + EUT + Wireless load 1 (Half load) + Wireless load 2 (Half load) + Wireless load 3 (Null load)
	Mode 9	AC/DC Adapter + EUT + Wireless load 1 (Full load) + Wireless load 2 (Null load) + Wireless load 3 (Null load)
	Mode 10	AC/DC Adapter + EUT + Wireless load 1 (Full load)
	Mode 11	AC/DC Adapter + EUT + Wireless load 1 (Half load)
	Mode 12	AC/DC Adapter + EUT + Wireless load 1 (Null load)
	Mode 13	AC/DC Adapter + EUT + Wireless load 2 (Full load)
	Mode 14	AC/DC Adapter + EUT + Wireless load 2 (Half load)
	Mode 15	AC/DC Adapter + EUT + Wireless load 2 (Null load)
	Mode 16	AC/DC Adapter + EUT + Wireless load 3 (Full load)
	Mode 17	AC/DC Adapter + EUT + Wireless load 3 (Half load)
	Mode 18	AC/DC Adapter + EUT + Wireless load 3 (Null load)
	Mode 19	AC/DC Adapter + EUT (Null Load)

Note: 1. All modes and configurations above have been tested. Only the result of the worst case was recorded in the report, the worst-case configuration is Mode 1.

2. For Radiated Emission, 3axis were chosen for testing for each applicable mode, including the mobile phone in vertical and horizontal positions.

3. The Mobile Phone provided by Lab.

4. According to the manufacturer's design principle, the wireless charging power will reach its maximum when the client device's battery level is between 1% and 10%.

The results shown in this test report refer only to the sample(s) tested unless otherwise stated and the sample(s) are retained for 30 days only. The document is issued by HUAK, this document cannot be reproduced except in full with our prior written permission. The more details and the authenticity of the report will be confirmed at http://www.cer-mark.com.

2.4. Description of Test Setup

Operation of EUT during Testing:

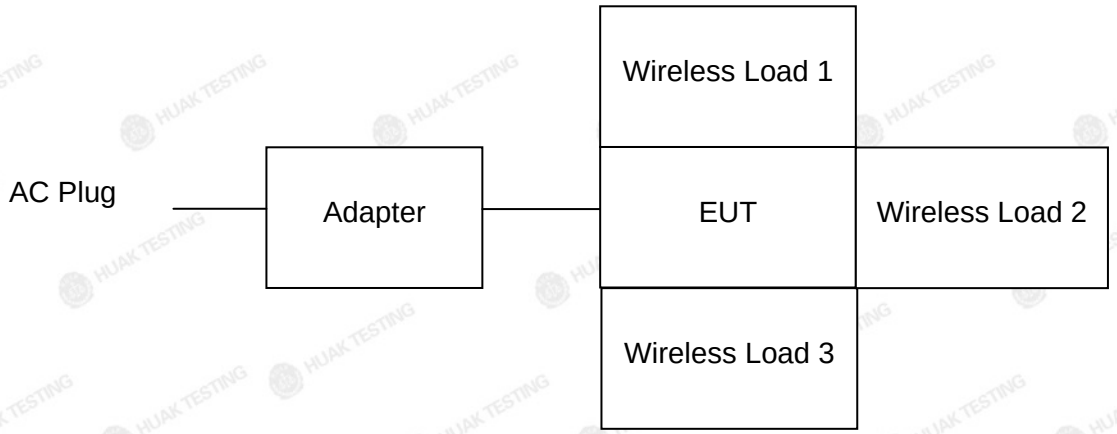

The sample was placed (0.8m (30MHz~1GHz), 0.8m (9KHz~30MHz)) above the ground plane of 3m chamber. Measurements in both horizontal and vertical polarities were performed. During the test, each emission was maximized by: having the EUT continuously working, investigated all operating modes, rotated about all 3 axis (X, Y & Z) and considered typical configuration to obtain worst position, manipulating interconnecting cables, rotating the turntable, varying antenna height from 1m to 4m in both horizontal and vertical polarizations. The emissions worst-case are shown in Test Results of the following pages. The worst case is X position.

The results shown in this test report refer only to the sample(s) tested unless otherwise stated and the sample(s) are retained for 30 days only. The document is issued by HUAK, this document cannot be reproduced except in full with our prior written permission. The more details and the authenticity of the report will be confirmed at http://www.cer-mark.com.

2.5. Description of Support Units

The EUT has been tested as an independent unit together with other necessary accessories or support units. The following support units or accessories were used to form a representative test configuration during the tests.

Item	Equipment	Trade Mark	Model/Type No.	Specification	Remark
1	Magnetic wireless charging station	N/A	XD-CE06	N/A	EUT
2	USB Cable	N/A	N/A	1.5m	Accessory
3	Adapter	N/A	Q5004	Input: AC100-240V, 50/60Hz, 0.6A (Max) Output: DC5.0V/3.0A or 9.0V/2.22A or 12.0/1.67A, Total Output: 20W (Max)	Accessory
5	Wireless Load 1	YBZ	N/A	Wireless input 15W (Max)	Peripheral
6	Wireless Load 2	YBZ	N/A	Wireless input 5W	Peripheral
7	Wireless Load 3	YBZ	N/A	Wireless input 2.5W	Peripheral

Note:

1. All the equipment/cables were placed in the worst-case configuration to maximize the emission during the test.
2. Grounding was established in accordance with the manufacturer's requirements and conditions for the intended use.
3. For conducted measurements (Output Power, 6dB Emission Bandwidth, Power Spectral Density, Spurious Emissions), the antenna of EUT is connected to the test equipment via temporary antenna connector, the antenna connector is soldered on the antenna port of EUT, and the temporary antenna connector is listed in the Test Instruments.

The results shown in this test report refer only to the sample(s) tested unless otherwise stated and the sample(s) are retained for 30 days only. The document is issued by HUAK, this document cannot be reproduced except in full with our prior written permission. The more details and the authenticity of the report will be confirmed at http://www.cer-mark.com.

2.6. Measurement Instruments List

Item	Equipment	Manufacturer	Model No.	Serial No.	Last Cal.	Cal. Interval
1.	L.I.S.N. Artificial Mains Network	R&S	ENV216	HKE-002	Feb. 17, 2023	1 Year
2.	Receiver	R&S	ESR-7	HKE-005	Feb. 17, 2023	1 Year
3.	RF automatic control unit	Tonscend	JS0806-2	HKE-060	Feb. 17, 2023	1 Year
4.	Spectrum analyzer	R&S	FSP40	HKE-025	Feb. 17, 2023	1 Year
5.	Spectrum analyzer	Agilent	N9020A	HKE-048	Feb. 17, 2023	1 Year
6.	Preamplifier	Schwarzbeck	BBV 9743	HKE-006	Feb. 17, 2023	1 Year
7.	EMI Test Receiver	Rohde & Schwarz	ESR-7	HKE-010	Feb. 17, 2023	1 Year
8.	Bilog Broadband Antenna	Schwarzbeck	VULB9163	HKE-012	Feb. 17, 2023	1 Year
9.	Loop Antenna	Schwarzbeck	FMZB 1519 B	HKE-014	Feb. 17, 2023	1 Year
10.	Horn Antenna	Schwarzbeck	9120D	HKE-013	Feb. 17, 2023	1 Year
11.	Pre-amplifier	EMCI	EMC051845 SE	HKE-015	Feb. 17, 2023	1 Year
12.	Pre-amplifier	Agilent	83051A	HKE-016	Feb. 17, 2023	1 Year
13.	EMI Test Software EZ-EMC	Tonscend	JS1120-B Version	HKE-083	N/A	N/A
14.	Power Sensor	Agilent	E9300A	HKE-086	Feb. 17, 2023	1 Year
15.	Spectrum analyzer	Agilent	N9020A	HKE-048	Feb. 17, 2023	1 Year
16.	Signal generator	Agilent	N5182A	HKE-029	Feb. 17, 2023	1 Year
17.	Signal Generator	Agilent	83630A	HKE-028	Feb. 17, 2023	1 Year
18.	Shielded room	Shiel Hong	4*3*3	HKE-039	Dec. 09, 2021	3 Year
19.	10dB Attenuator	Schwarzbeck	VTSD9561F	HKE-153	Feb. 17, 2023	1 Year

The results shown in this test report refer only to the sample(s) tested unless otherwise stated and the sample(s) are retained for 30 days only. The document is issued by HUAK, this document cannot be reproduced except in full with our prior written permission. The more details and the authenticity of the report will be confirmed at http://www.cer-mark.com.

3. Conducted Emission Test

3.1. Block Diagram of Test Setup

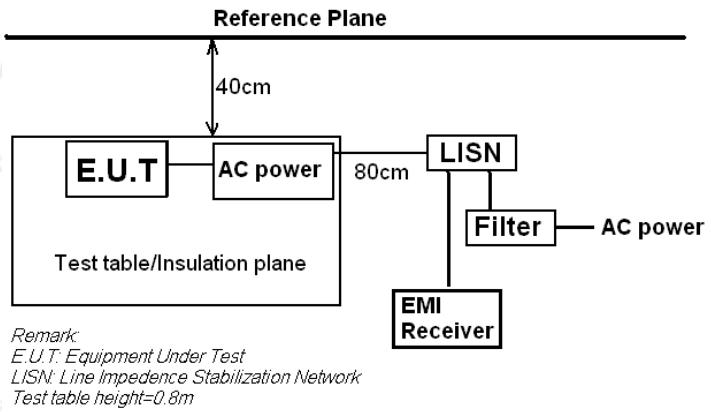

3.2. Conducted Power Line Emission Limit

According to FCC Part 18.307(b)

Frequency (MHz)	Maximum RF Line Voltage (dBμV)			
	CLASS A		CLASS B	
	Q.P.	Ave.	Q.P.	Ave.
0.15 - 0.50	79	66	66-56*	56-46*
0.50 - 5.00	73	60	56	46
5.00 - 30.0	73	60	60	50

* Decreasing linearly with the logarithm of the frequency

For intentional device, according to §18.307 Line Conducted Emission Limit is same as above table.

3.3. Test Procedure

1. The equipment was set up as per the test configuration to simulate typical actual usage per the user's manual. The EUT is a tabletop system, a wooden table with a height of 0.8 meters is used and is placed on the ground plane as per ANSI C63.10.
2. Support equipment, if needed, was placed as per ANSI C63.10.
3. All I/O cables were positioned to simulate typical actual usage as per ANSI C63.10.
4. If a EUT received DC power from the USB Port of Notebook PC, the PC's adapter received AC120V/60Hz power through a Line Impedance Stabilization Network (LISN) which supplied power source and was grounded to the ground plane.
5. All support equipments received AC power from a second LISN, if any.
6. The EUT test program was started. Emissions were measured on each current carrying line of the EUT using a spectrum Analyzer / Receiver connected to the LISN powering the EUT. The LISN has two monitoring points: Line 1 (Hot Side) and Line 2 (Neutral Side). Two scans were taken: one with Line 1 connected to Analyzer / Receiver and Line 2 connected to a 50 ohm load; the second scan had Line 1 connected to a 50 ohm load and Line 2 connected to the Analyzer / Receiver.
7. Analyzer / Receiver scanned from 150 KHz to 30MHz for emissions in each of the test modes.

The results shown in this test report refer only to the sample(s) tested unless otherwise stated and the sample(s) are retained for 30 days only. The document is issued by HUAK, this document cannot be reproduced except in full with our prior written permission. The more details and the authenticity of the report will be confirmed at http://www.cer-mark.com.

3.4. Test Result

PASS

All the test modes completed for test. Only the worst result (ANT1+ANT2+ANT3) was reported as below:

Test Specification: Line

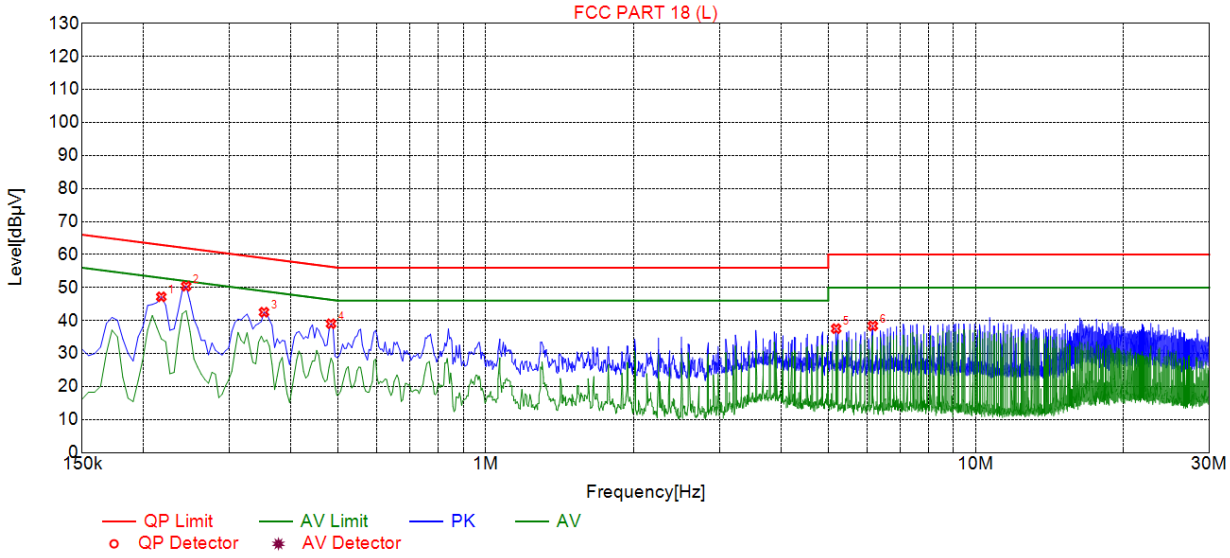

Suspected List								
NO.	Freq. [MHz]	Level [dBμV]	Factor [dB]	Limit [dBμV]	Margin [dB]	Reading [dBμV]	Detector	Type
1	0.2175	47.19	20.05	62.95	15.76	27.14	PK	L
2	0.2445	50.39	20.03	62.06	11.67	30.36	PK	L
3	0.3525	42.53	20.03	58.97	16.44	22.50	PK	L
4	0.4830	39.03	20.04	56.30	17.27	18.99	PK	L
5	5.1900	37.55	20.26	60.00	22.45	17.29	PK	L
6	6.1665	38.38	20.23	60.00	21.62	18.15	PK	L

Remark: Margin = Limit – Level

Correction factor = Cable lose + LISN insertion loss

Level=Test receiver reading + correction factor

The results shown in this test report refer only to the sample(s) tested unless otherwise stated and the sample(s) are retained for 30 days only. The document is issued by HUAK, this document cannot be reproduced except in full with our prior written permission. The more details and the authenticity of the report will be confirmed at http://www.cer-mark.com.

Test Specification: Neutral

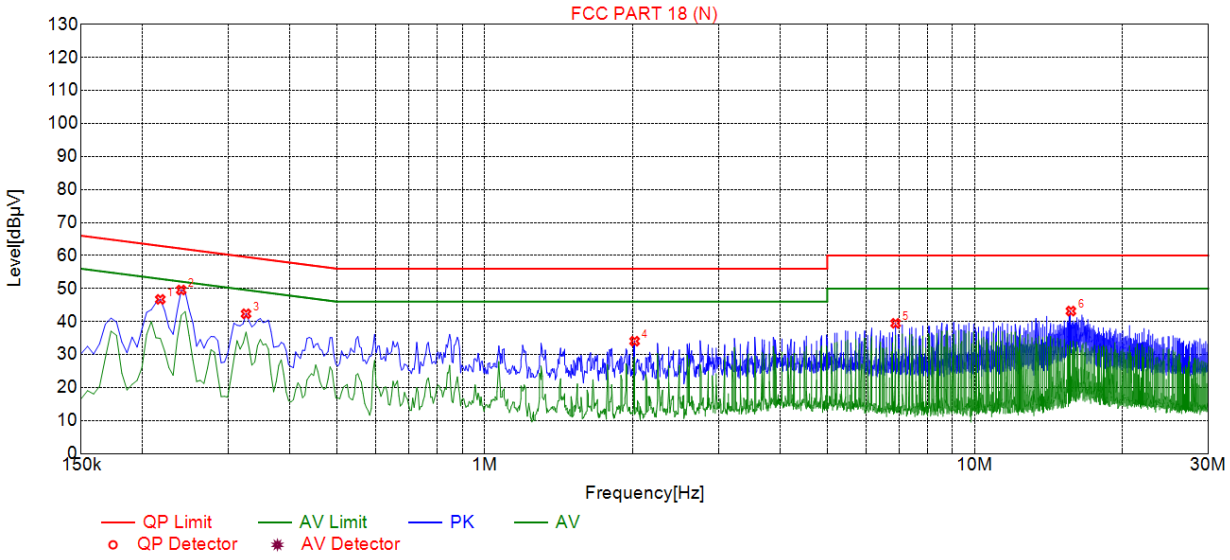

Suspected List								
NO.	Freq. [MHz]	Level [dBμV]	Factor [dB]	Limit [dBμV]	Margin [dB]	Reading [dBμV]	Detector	Type
1	0.2175	46.71	20.05	62.95	16.24	26.66	PK	N
2	0.2400	49.55	20.03	62.18	12.63	29.52	PK	N
3	0.3255	42.35	20.05	59.58	17.23	22.30	PK	N
4	2.0220	34.05	20.15	56.00	21.95	13.90	PK	N
5	6.8955	39.46	20.20	60.00	20.54	19.26	PK	N
6	15.7200	43.18	19.97	60.00	16.82	23.21	PK	N

Remark: Margin = Limit – Level

Correction factor = Cable lose + LISN insertion loss

Level=Test receiver reading + correction factor

The results shown in this test report refer only to the sample(s) tested unless otherwise stated and the sample(s) are retained for 30 days only. The document is issued by HUAK, this document cannot be reproduced except in full with our prior written permission. The more details and the authenticity of the report will be confirmed at http://www.cer-mark.com.

4. Radiated Emissions

4.1. Block Diagram of Test Setup

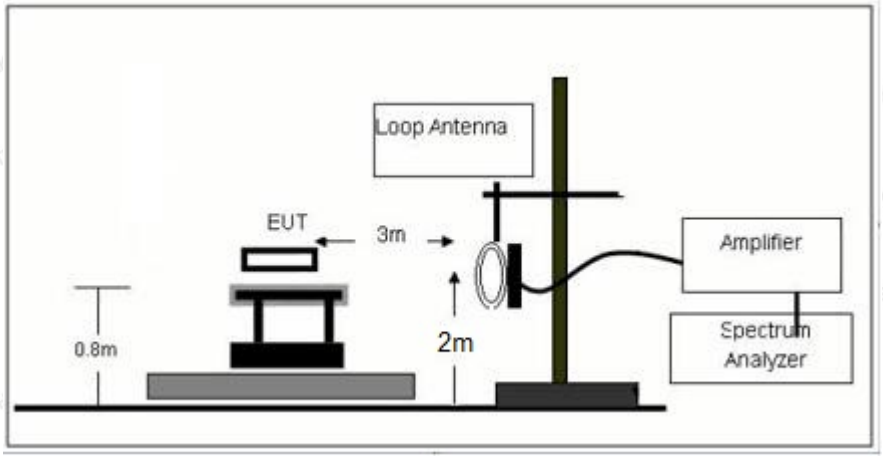

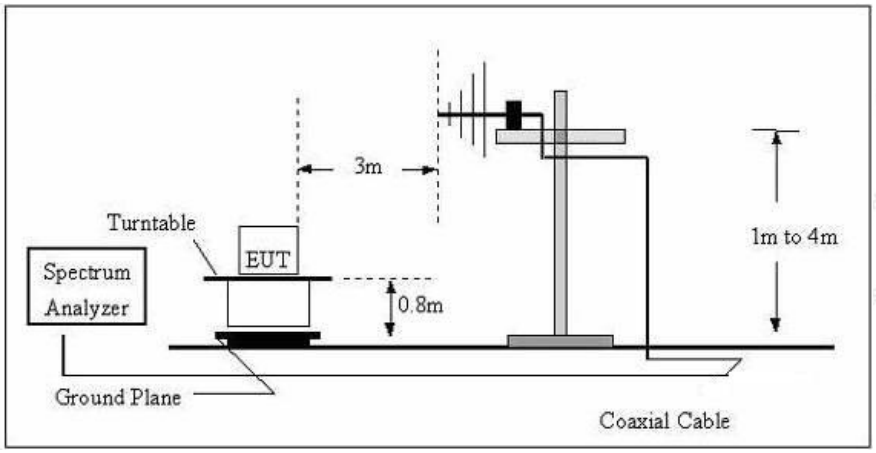

The results shown in this test report refer only to the sample(s) tested unless otherwise stated and the sample(s) are retained for 30 days only. The document is issued by HUAK, this document cannot be reproduced except in full with our prior written permission. The more details and the authenticity of the report will be confirmed at http://www.cer-mark.com.

4.2. Rules and Specifications

Except as provided elsewhere in this Subpart 18.305 (b), the field strength levels of emissions which lie outside the bands specified in §18.301, unless otherwise indicated, shall not exceed the following table:

Equipment	Operating frequency	RF Power generated by equipment (watts)	Field strength limit (uV/m)	Distance (meters)
(miscellaneous)				
	Any non-ISM frequency	Below 500 500 or more	15 15 × SQRT(power/500)	300 [1]300

Remark:

(1) Emission level dBuV/m for 0.009~30MHz = 20log (15) + 40log (300/3) dBuV/m;

(2) Calculated according FCC 18.305.

(3) The smaller limit shall apply at the cross point between two frequency bands.

(4) Distance is the distance in meters between the measuring instrument, antenna and the closest point of any part of the device or system.

4.3. Test Procedure

Measurement distance 3m
For the measurement range up to 30MHz in the following plots the field strength result from 3m
Distance measurements are extrapolated to 300m and 30m distance respectively, by 40dB/decade, Per antenna factor scaling.
Measurements below 1000MHz are performed with a peak detector and compared to average limits, Measurements with an average detector are not required.

Note:

For battery operated equipment, the equipment tests shall be performed using a new battery.

4.4. Test Result

PASS
Note: All the test modes completed for test. Only the worst result (ANT1+ANT2+ANT3) was reported as below:

The results shown in this test report refer only to the sample(s) tested unless otherwise stated and the sample(s) are retained for 30 days only. The document is issued by HUAK, this document cannot be reproduced except in full with our prior written permission. The more details and the authenticity of the report will be confirmed at http://www.cer-mark.com.

ANT 1+ANT 2+ANT 3:

For 9KHz - 30MHz

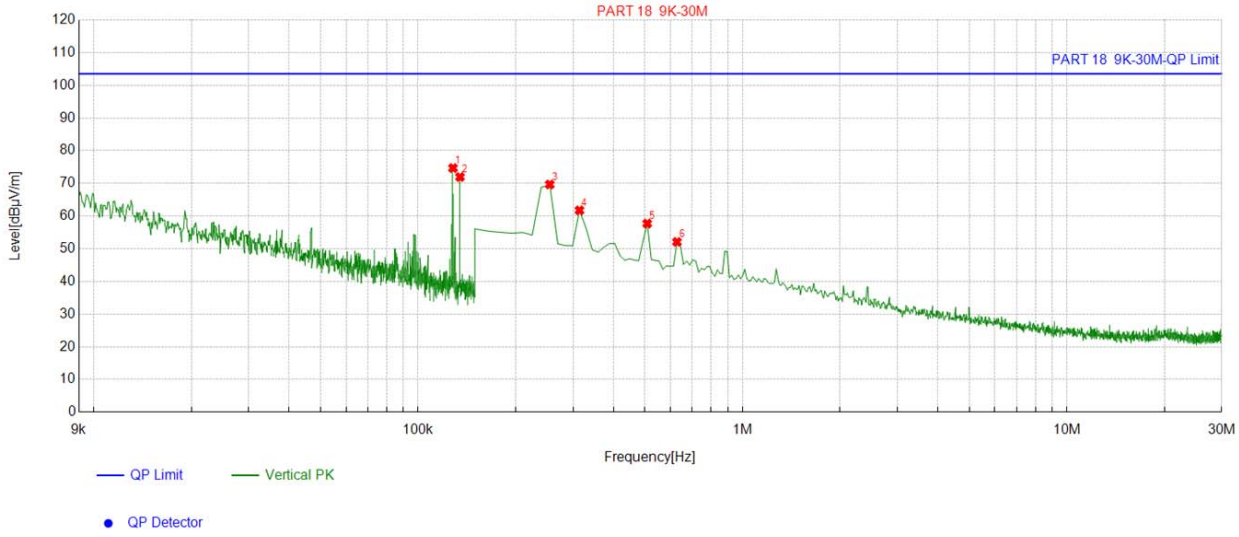

Suspected List						
NO.	Freq. [MHz]	Factor [dB]	Reading [dBμV/m]	Level [dBμV/m]	Limit [dBμV/m]	Margin [dB]
1	0.128064	13.78	60.92	74.70	103.50	28.80
2	0.134623	13.78	58.18	71.96	103.50	31.54
3	0.254527	13.68	55.98	69.66	103.50	33.84
4	0.314257	13.70	48.06	61.76	103.50	41.74
5	0.508379	13.73	43.98	57.71	103.50	45.79
6	0.627839	13.74	38.36	52.10	103.50	51.40

Remark: Factor = Cable loss + Antenna factor – Preamplifier; Level = Reading + Factor; Margin = Limit – Level;

The results shown in this test report refer only to the sample(s) tested unless otherwise stated and the sample(s) are retained for 30 days only. The document is issued by HUAK, this document cannot be reproduced except in full with our prior written permission. The more details and the authenticity of the report will be confirmed at http://www.cer-mark.com.

For 30MHz-1GHz

Antenna polarity: H

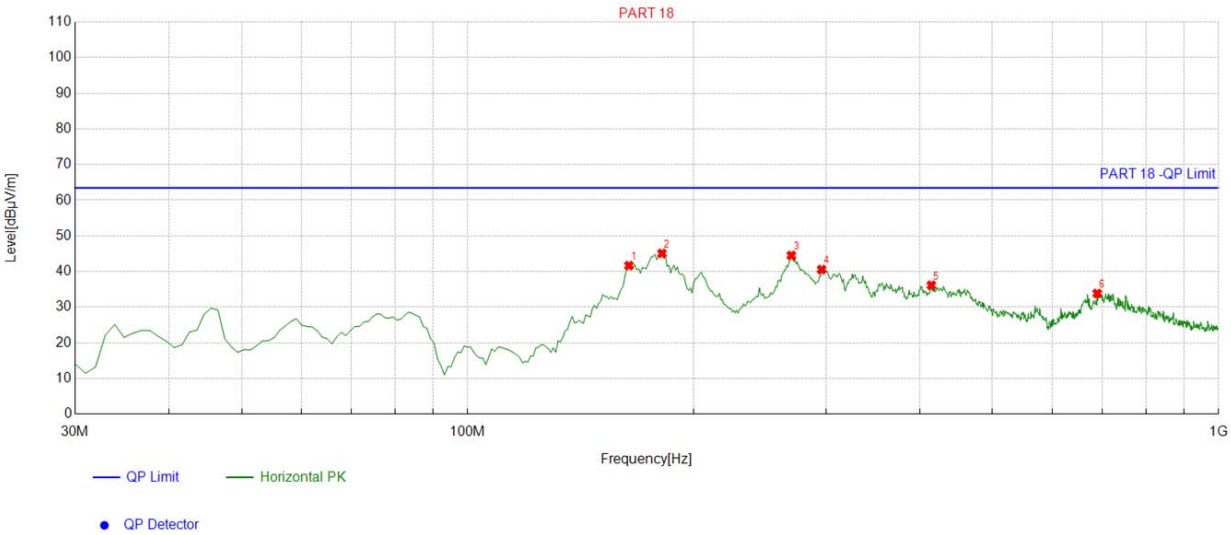

Suspected List									
NO.	Freq. [MHz]	Factor [dB]	Reading [dBμV/m]	Level [dBμV/m]	Limit [dBμV/m]	Margin [dB]	Height [cm]	Angle [°]	Polarity
1	163.99399	-17.19	58.86	41.67	63.50	21.83	100	47	Horizontal
2	181.47147	-16.93	62.02	45.09	63.50	18.41	100	47	Horizontal
3	269.82983	-12.69	57.22	44.53	63.50	18.97	100	331	Horizontal
4	296.04604	-12.08	52.64	40.56	63.50	22.94	100	69	Horizontal
5	414.50450	-8.92	45.08	36.16	63.50	27.34	100	145	Horizontal
6	689.28928	-4.03	37.90	33.87	63.50	29.63	100	164	Horizontal

Remark: Factor = Cable loss + Antenna factor – Preamplifier; Level = Reading + Factor; Margin = Limit – Level;

The results shown in this test report refer only to the sample(s) tested unless otherwise stated and the sample(s) are retained for 30 days only. The document is issued by HUAK, this document cannot be reproduced except in full with our prior written permission. The more details and the authenticity of the report will be confirmed at http://www.cer-mark.com.

Antenna polarity: V

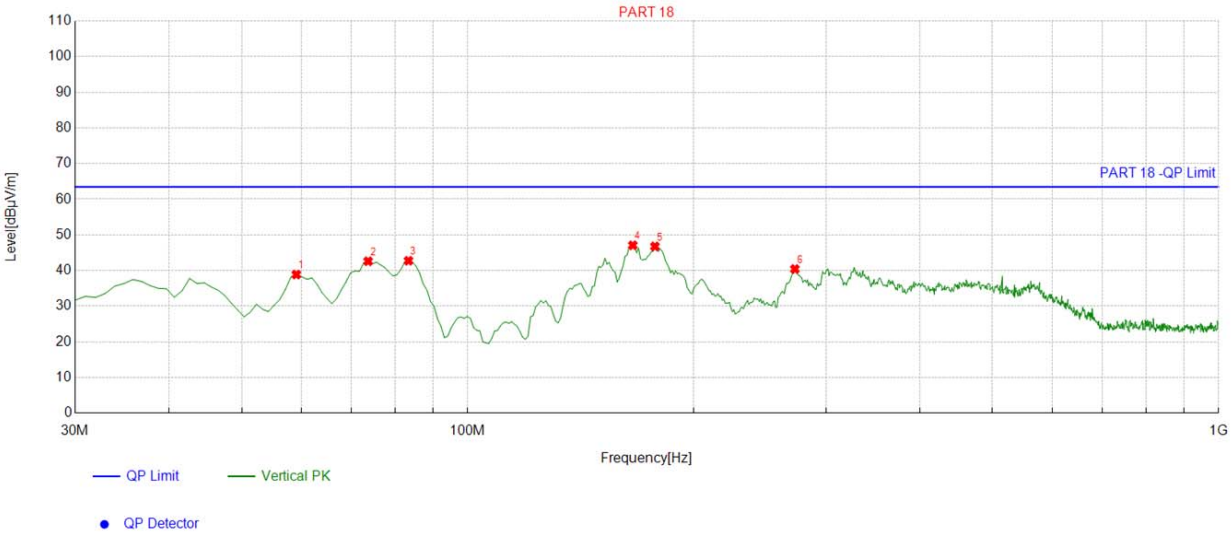

Suspected List									
NO.	Freq. [MHz]	Factor [dB]	Reading [dBμV/m]	Level [dBμV/m]	Limit [dBμV/m]	Margin [dB]	Height [cm]	Angle [°]	Polarity
1	59.129129	-14.55	53.43	38.88	63.50	24.62	100	244	Vertical
2	73.693694	-16.44	59.05	42.61	63.50	20.89	100	272	Vertical
3	83.403403	-17.71	60.46	42.75	63.50	20.75	100	258	Vertical
4	165.93593	-17.21	64.30	47.09	63.50	16.41	100	359	Vertical
5	177.58758	-17.23	64.00	46.77	63.50	16.73	100	335	Vertical
6	272.74274	-12.59	53.02	40.43	63.50	23.07	100	358	Vertical

Remark: Factor = Cable loss + Antenna factor – Preamplifier; Level = Reading + Factor; Margin = Limit – Level;

The results shown in this test report refer only to the sample(s) tested unless otherwise stated and the sample(s) are retained for 30 days only. The document is issued by HUAK, this document cannot be reproduced except in full with our prior written permission. The more details and the authenticity of the report will be confirmed at http://www.cer-mark.com.

5. Antenna Requirement

Refer to statement below for compliance.
The manufacturer may design the unit so that the user can replace a broken antenna, but the use of a standard antenna jack or electrical connector is prohibited. Further, this requirement does not apply to intentional radiators that must be professionally installed.

Antenna Connected Construction
The antenna used in this product is a Coil Antenna, which permanently attached. It conforms to the standard requirements. The directional gains of antenna used for transmitting is 0dBi.

Antenna

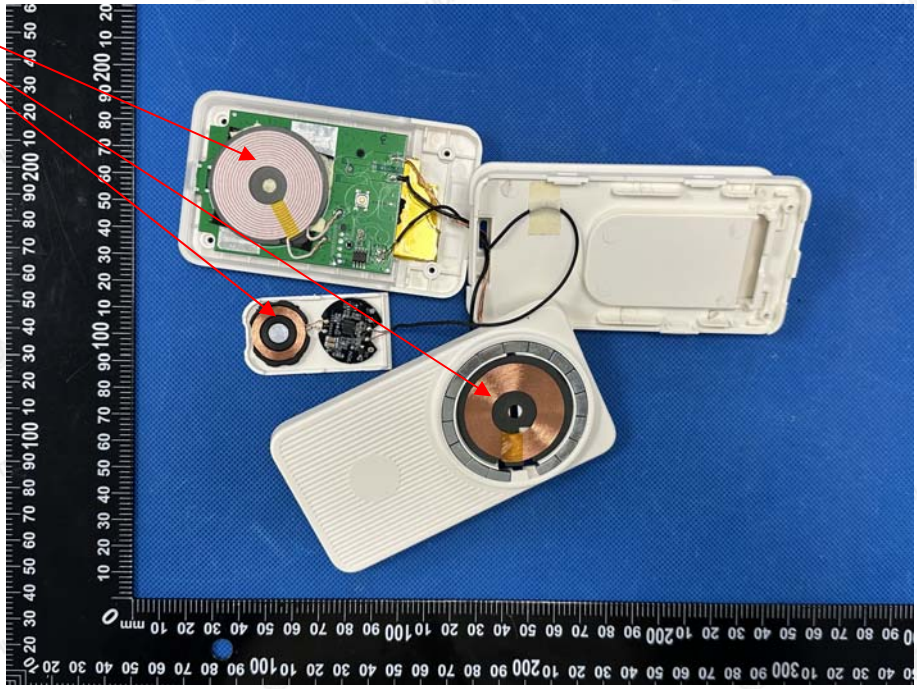

The results shown in this test report refer only to the sample(s) tested unless otherwise stated and the sample(s) are retained for 30 days only. The document is issued by HUAK, this document cannot be reproduced except in full with our prior written permission. The more details and the authenticity of the report will be confirmed at http://www.cer-mark.com.

6. Photograph of Test

Radiated Emission

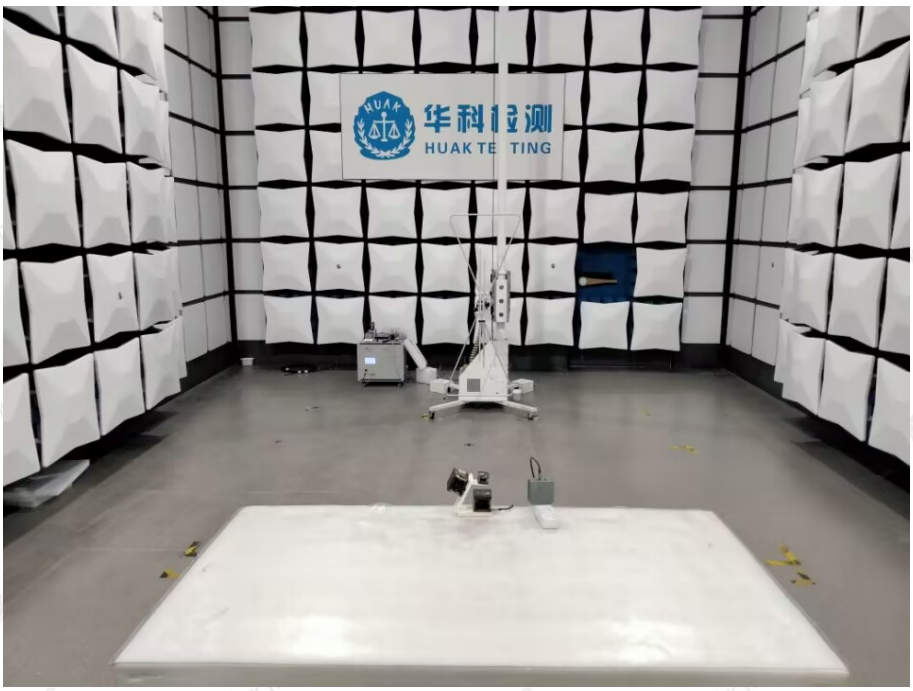

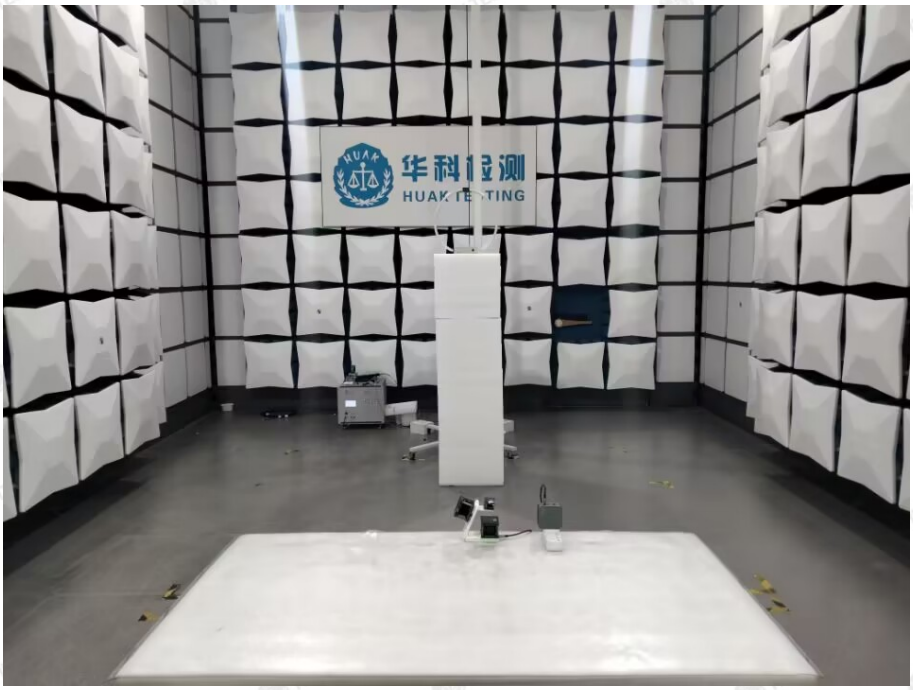

The results shown in this test report refer only to the sample(s) tested unless otherwise stated and the sample(s) are retained for 30 days only. The document is issued by HUAK, this document cannot be reproduced except in full with our prior written permission. The more details and the authenticity of the report will be confirmed at http://www.cer-mark.com.

Conducted Emission

The results shown in this test report refer only to the sample(s) tested unless otherwise stated and the sample(s) are retained for 30 days only. The document is issued by HUAK, this document cannot be reproduced except in full with our prior written permission. The more details and the authenticity of the report will be confirmed at http://www.cer-mark.com.

TEL : +86-755 2302 9901 FAX : +86-755 2302 9901 E-mail : service@cer-mark.com
Add: 1-2F., Building B2, Junfeng Zhongcheng Zhizao Innovation Park, Heping Community, Fuhai Street, Bao'an District, Shenzhen, Guangdong, China

7. Photos of the EUT

Reference to the report: ANNEX A of external photos and ANNEX B of internal photos.

---------End of test report---------

The results shown in this test report refer only to the sample(s) tested unless otherwise stated and the sample(s) are retained for 30 days only. The document is issued by HUAK, this document cannot be reproduced except in full with our prior written permission. The more details and the authenticity of the report will be confirmed at http://www.cer-mark.com.

TEL : +86-755 2302 9901 FAX : +86-755 2302 9901 E-mail : service@cer-mark.com
Add: 1-2F., Building B2, Junfeng Zhongcheng Zhizao Innovation Park, Heping Community, Fuhai Street, Bao'an District, Shenzhen, Guangdong, China