Smart Lock

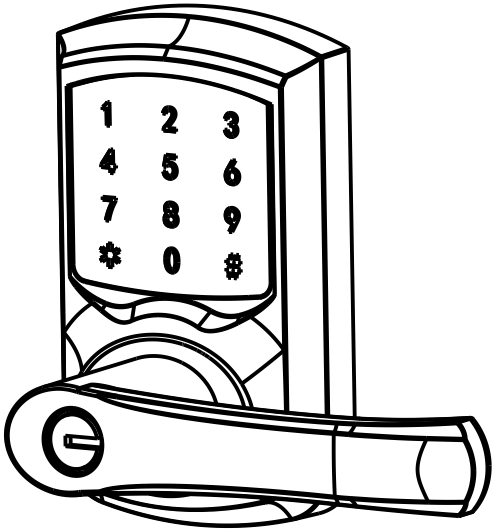

Installation Guide

Installation Video

A. Package Contents

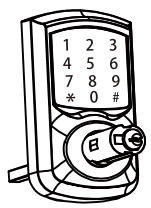

Keypad

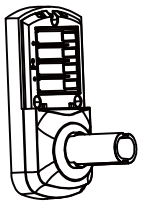

Base Plate

①Door Lever

② Door Lever

Cylinder Hole Cover

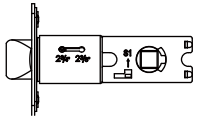

Latch

Fixed Pad

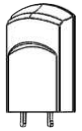

Battery Cover

Strike

Strike box

Emergency Key

Spanner

Gateway*1

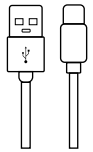

USB Cable*1

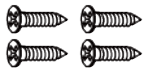

Wood Screw
M4.0*20 4PCS

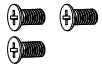

Base Plate Screw
PM4.0*10 3PCS

Fixed Pad Screw
M4.0*35 2PCS

Handle Screw
M5.0*4 2PCS

☆ Spare Screws:1*Fixed Bolt,1*Handle Screw,1*Base Plate Screw

☆ Before installation, please check the accessories in the package according to the above list

B. Preparation

1) Tool: Phillips screwdriver , 5V 1A charging plug
2) Power: DC6V, 4 AAA alkaline batteries (1.5V)
Note: Do not use alkaline batteries with carbon-zinc batteries or batteries of different brands.
Do not use the new batteries with the old one.

5 Insert the Keypad into the door through the hub of latch. Pass the IC wire above the Latch to the interior side of the door.
Note:make sure the IC wire is put in the slot in back of Keypad.

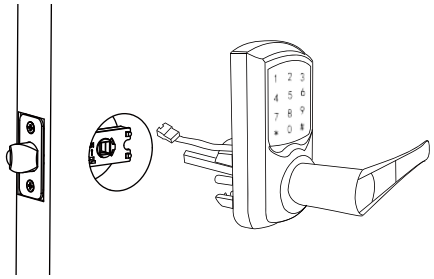

6 Install the Fixed Pad with two Fixed Pad Screws,and make sure it is paralleled with Keypad and door edge.
Note:make sure Sponge side is near to door.

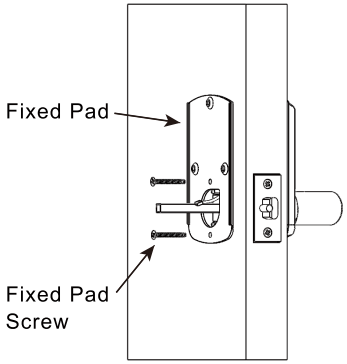

7 Connect the IC wire in the Keypad into the Base Plate.Secure the Base Plate on the Fixed Pad with 3 Base Plate Screws.
Take off Battery Cover and insert 4 AAA batteries and slide the Battery Cover.

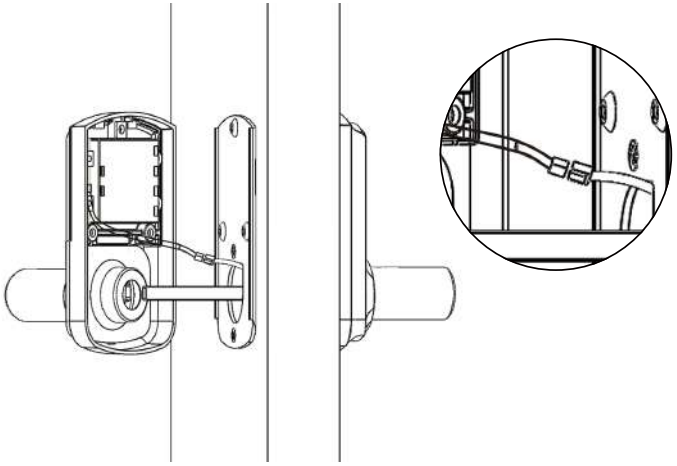

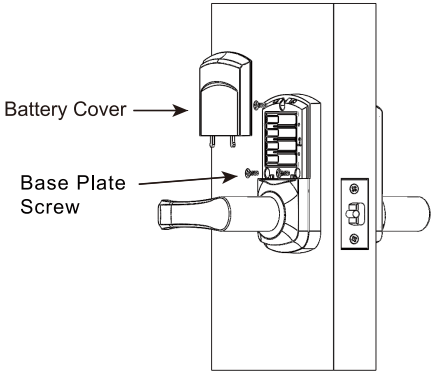

8 Door lock installation is completed.Turn inside and outside handle to see if it turns freely.

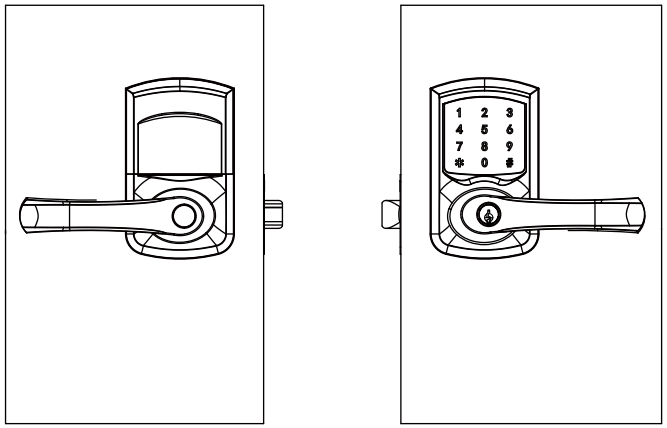

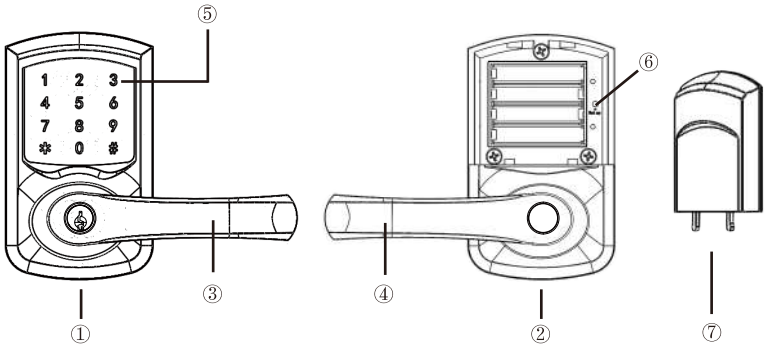

① Keypad
② Base Plate
③ Exterior Handle
④ Interior Handle
⑤ Touchscreen keypad
⑥ Reset Key
⑦ Battery Cover

C. Installation

1 Punching in the door according to the dimension requirement.

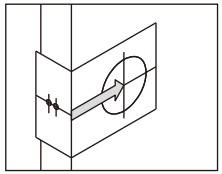

1)Backset is distance from door edge to centre of holeon door face,adjust Latch fit both backset of 2-3/4”(70mm)or 2-3/8”(60mm)

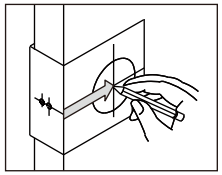

2)Select the height and backset as desired on the door face;use the Template as an indication to mark the centre of the circle on the door face and the centre of the of the door edge.

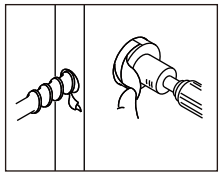

3)Use the marks as a guide to drill a hole φ2-1/8” (54mm)through the door face for the lockset, then a hole of φ1”(25.4mm) for latch.

2 Install the Latch and secure it with 2 Wood screws.
The latch can be adjusted to 2-3/8"(60mm) or 2-3-4"(70mm).

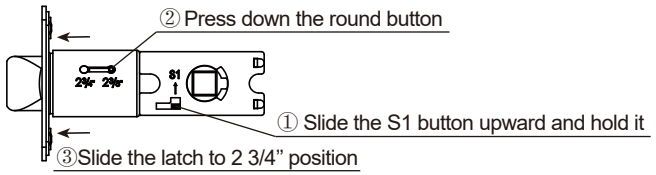

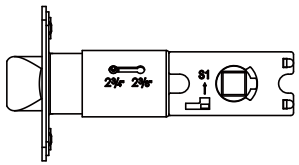

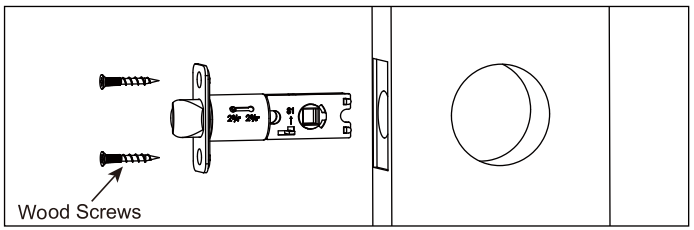

3 Install Strike

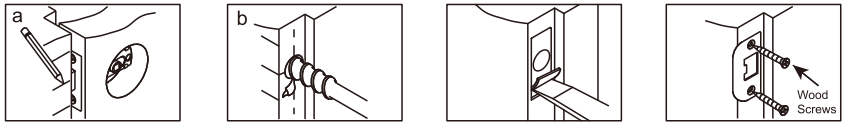

a,Close door and mark horizontal centre of Latch on to door frame. Mark vertical line where door edge meets frame and measure in half of door thickness to find vertical centre.

b,Extend both lines until they intersect and drill a 1”(25.4mm)hole to 1/2” (15mm) depth. Position Strike plate and mark around edge.

c,Chisel fram to approx 1/16’(1.6mm)depth or until Strike sits flush. Using two Wood Screws fix Strike to the frame.

4 Install the lever onto the lock and use the handle screw and the wrench to fix it.

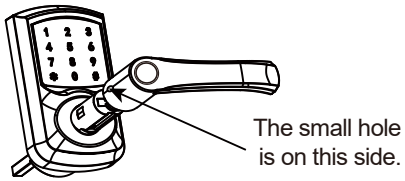

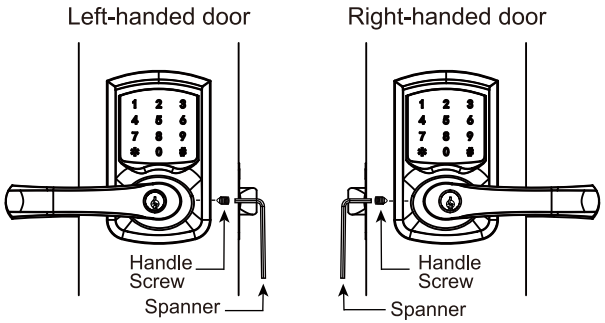

Tighten the handle screws with the spanner (included in the package).

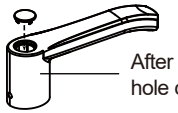

After door handles installed, gently press the cylinder hole cover vertically into the hole in the inside handle.

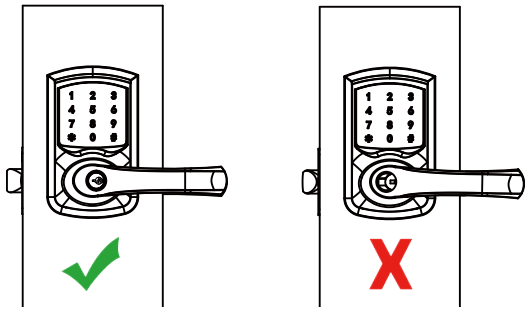

1. The left picture shows the correct installation of the right-handed door, and the lock cylinder is centered in the handle hole;The right picture is wrongly installed, the lock cylinder and the handle hole are not centered. Please exchange the 2 handles.

2. If the door is left-handed, the handle should be in the opposite direction.

FAQ

1. Does it support passage mode?
   --- No
2. Can it work with all types of gateways?
   ---No, it only work with gateways that use Tuya chip.
3. Can One-Time password be set remotely?
   --- Yes.
4. Can Time-Limited password be generated remotely?
   --- Yes.
5. Can a dynamic password be generated remotely?
   --- Yes, it will last 5 minutes after being added.
6. Can Custom password be set remotely?
   --- Yes
7. Can One-Time password be shared via SMS?
   ---It needs to enable SMS function, and telecommunication operators will charge fees.
8. Can Time-limited password be shared via SMS?
   ---It needs to enable SMS function, and telecommunication operators will charge fees.
9. For password sharing, which social media platforms can be shared?
   ---All social media platforms installed on the user's phone.
10. Does it support mute mode?
    ---No
11. Do the recipients need to download the app when sharing passwords via phone?
    ---No need when sharing passwords via SMS.
12. Can one phone/administrator manage multiple locks at the same time? How many locks can be managed at most?
    ---Yes, up to 200 devices can be added to a single ‘home’.
13. Can multiple phones control or manage one lock?
    ---All the Administrators in your ‘home’ can manage the same lock in your ‘home’.
14. Can the touchscreen keyboard be disabled?
    ---No
15. Does it support automatic unlock function?
    ---No
16. How many passwords can be added?
    ---A single device can store 50 sets of passwords.
17. Can 5G WIFI be used?
    ---No, only support 2.4G WIFI.
18. Can passwords be deleted remotely?
    ---Yes, you can delete passwords with the lock connected with the gateway.
19. How to connect with Alexa and Google Home?
    ---Please scan the QR code in the manual to watch the connection video, or refer to the "Third-party Control Issues" under the App FAQ menu for third-party operation and usage guides.)

FCC Statement

Note: This equipment has been tested and found to comply with the limits for a Class B digital device, pursuant to part 15 of the FCC Rules. These limits are designed to provide reasonable protection against harmful interference in a residential installation. This equipment generates, uses and can radiate radio frequency energy and, if not installed and used in accordance with the instructions, may cause harmful interference to radio communications. However, there is no guarantee that interference will not occur in a particular installation. If this equipment does cause harmful interference to radio or television reception, which can be determined by turning the equipment off and on, the user is encouraged to try to correct the interference by one or more of the following measures:

—Reorient or relocate the receiving antenna.

—Increase the separation between the equipment and receiver.

—Connect the equipment into an outlet on a circuit different from that to which the receiver is connected.

—Consult the dealer or an experienced radio/TV technician for help.

This device complies with part 15 of the FCC Rules. Operation is subject to the following two conditions:(1) This device may not cause harmful interference, and (2) this device must accept any interference received, including interference that may cause undesired operation.

Any changes or modifications not expressly approved by the party responsible for compliance could void the user's authority to operate the equipment.

The device has evaluated to meet general RF exposure requirement. The device can be used be in portable exposure without restriction.

IC Statement

This device complies with Industry Canada licenseexempt RSS standard (s). Operation is subject to the following two conditions:(1) this device may not cause interference, and
(2) this device must accept any interference, including interference that may cause undesired operation of the device.

Le pr é sent appareil est conforme aux CNR d'Industrie Canada applicables aux appareils radio exempts de licence. L'exploitation est autoris é e aux deux conditions suivantes:
(1)l'appareil ne doit pas produire de brouillage, et
(2)l'utilisateur de l'appareil doit accepter tout brouillage radio é lectrique subi, m ê me si le brouillage est susceptible d'en compromettre le fonctionnement

The device has evaluated to meet general RF exposure requirement. The device can be used be in portable exposure without restriction.

On a é valu é que l' appareil r é pondait aux exigences g é n é rales en mati è re d' exposition aux RF. L' appareil peut ê tre utilis é en exposition portable sans restriction.

Any changes or modifications not expressly approved by the party responsible for compliance could void the user's authority to operate the equipment.

Ce produit est conforme à la limite d' exposition aux IC RF fix é e pour un environnement non contrôl é et est sûr pour l' exploitation pr é vue, comme d é crit dans le pr é sent manuel