KY6124 - User Manual

1. Usage Caution

1.1. Warning

1. The dangerous driving alerts issued by the active safety AI device are only voice alerts, which cannot replace the driver's driving decision and operation;
1. The dangerous driving alerts issued by the active safety AI device are developed based on computer vision and deep learning technology, which cannot guarantee 100% recognition accuracy. For example, under different road conditions and weather conditions, the accuracy rate of obstacle recognition is different.
1. This device is intended to enhance the situational awareness when used properly. If used improperly, you could become distracted by the display, which could lead to an accident causing serious personal injury or death. DO NOT seek to access the information stored on the device or change the device settings whilst driving. The device should only be operated when your vehicle is stationary, and you are parked in a safe place in compliance with local laws. Always maintain awareness of your surroundings and do not stare at the display or become distracted by the display. Focusing on the display could cause you to miss obstacles or hazards. Use the device at your own risk.
1. When installing the device in a vehicle, do not place the device where it obstructs the driver's view of the road or interferes with vehicle operating controls, such as the steering wheel, foot pedals, or transmission levers. Do not place unsecured on the vehicle dashboard. Do not place the device in front of or above any airbag.
1. Video playback upon devices with display which are visible to the driver, is prohibited or restricted in some countries or States. Please adhere to these laws.

1.2. Maintenance Precautions

1. Please keep the device dry. Do not let the device and cable stay in humid environment, or operate the device with wet hands, so as to avoid short-circuiting of the device, failures caused by corrosion, and electric shocks to personnel.
1. Do not subject the device to strong impact or vibration, so as not to cause device failure.
1. Do not place the device and power supply under too high or too low temperature, otherwise it may cause the device failure;
1. Do not hit, throw, or needle the device, and avoid dropping or squeezing the

device.

1. Do not use unofficial approved or provided power and data cables.
1. Do not disassemble the device and accessories without authorization, otherwise the device and accessories will not be covered by the warranty.

2. Product Introduction

2.1. Product Description

KY6124, a comprehensive auto active safety product, integrates satellite positioning, video surveillance, and active safety functions. The product meets the needs of fleet monitoring, management, driving safety and regulating driving behavior. Based on the advanced deep learning technology, the active safety functions -- advanced assisted driving system(ADAS), driver monitoring system(DMS), and Lane Changing Assistance(LCA), can be applied to complex driving scenarios, addressing the demands of safety, timeliness and efficiency in transportation, and improving the overall user experience. AI technology is integrated into the feeling of vehicle driving, which further regulates the driver's safe driving behavior.

2.2. Product Overview

Note:Model KY6124 does not include the LTE Wireless Module(MC116-NA)

2.3. Package Contents

Verify that you received the following items in the package:

- KY6124 Device
- Emgy.Alarm Button
- GPS External Antenna
- Car Charger
- SIM Card Removal Pin
- ACC Hard-wire Kit(Optional)

KY6124 Device	
Emgy.Alarm Button	
GPS External Antenna	
Car Charger	

3. Specification

3.1. KY6124 Specification

Item	
CPU	Dual-Core, 1.2GHz
RAM	2Gb 16-bit DDR3(L) memory

Wi-Fi	Support
4G	Not support
GPS	Support
G-Sensor	Support
Video/Audio	
Supported video formats	H265/H264
Supported audio formats	PCM、WAV
Built-in speaker	Support, mono
Built-in MIC	Support, mono
Front Camera	
Sensor Type	1/2.9'', 2-megapixel CMOS sensor
FOV	D:125° H:105° V:58°
Resolution	1920*1080
Video frame rate	1080p@30fps
Inward-facing camera	
Interface	1/3'', 2-megapixel CMOS sensor
FOV	D:120°H:100° V:45°
Resolution	1920*1080
Video frame rate	1080p@30fps
Infrared LED	Support
Other	
OS	Linux
Power	ACC or Cigarette power voltage 12-24V
Storage	TF card, up to 256GB, Class10 and above, FAT32
Casing	

Type	Standalone type
Color	Black
Weight	198 g (approximately)
Dimensions	66mmx88mmx98mm
Operating environment	
Operating Temperature	-20C°~+70C°
Storage Temperature	-30C°~+80C°
Relative Humidity	10% to 90%, non-condensing
Atmospheric pressure	860Mbar ~ 1060Mbar
Package Contents	
KY6124 Device×1, Emgy.Alarm Button×1, GPS External Antenna×1, Car Charger (Car Charger Version)	
* The configuration may vary in different regions.	

3.2. LED Indication

The following figure shows the location of LEDs:

The following table shows the LED states:

LED	Color	Indication	Description
Video Recording	Red / Blue	Blue Solid On	Video not recording
		Red Solid On	Video recording
Wi-Fi Connection	Yellow	OFF	Wi-Fi not Connected
		Solid On	Wi-Fi Connected
GPS Signal	Green	OFF	No GPS signal
		Solid On	GPS has signal

4. AI Functions

This device uses machine vision based on video analysis technology to automatically identify road risks and unsafe driving behaviors of drivers. Any detected event triggers an audible alert to alert the driver in real time, and these events are also synchronized to the platform.

Warning: AI function must be calibrated and configured in strict accordance with the installation and operation instructions, otherwise, the AI function cannot work properly.

4.1. ADAS Functions

4.1.1.Forward Collision Warning

Identify the relative speed of the vehicle and the vehicle in front in real time while driving, alert the driver if there is a potential collision to ensure sufficient emergency time.

Voice Alert：Watch out for the car ahead

4.1.2.Pedestrian Collision Warning

Identify pedestrians, cyclists, and motorcyclists in front of the vehicle in real time while driving, alert the driver if there is a potential collision to keep a safe distance all the time.

Voice Alert：Watch out for pedestrians

4.1.3.Lane Departure Warning

Identify the lane-departing behavior in real time while driving, alert the driver if there is unconsciously lane-departing to ensure driving safety.

Voice Alert： Lane departure

4.1.4.Virtual Bumper

When the vehicle is driving at low speed, identify the relative speed of this vehicle and the vehicle in front. Alert the driver to maintain a safe distance when there is a potential collision hazard.

Voice Alert： Please_keep_distance

4.1.5.Stop & Go

When the vehicle is stationary and the vehicle in front of it begins to move, remind the

driver that it is time to start.

Voice Alert： Please start

4.2. DMS Functions

4.2.1.Fatigue Driving

Identify and warn the driver's fatigue state (eyes closed, yawning) to ensure driving safety.

Voice Alert： please take a break

4.2.2.Distraction Driving

Identify and warn the driver's driving behavior without looking ahead on road(looking left and right, looking down for things) while driving to ensure driving safety.

Voice Alert： Please keep attention

4.2.3.Smoking Warning

Identify and warn drivers of smoking behavior while driving to ensure driving safety.

Voice Alert：No smoking

4.2.4.Calling Warning

Identify and warn the driver's mobile phone calling behavior when driving to ensure driving safety.

Voice Alert：No cellphone using

T

5. Installation

5.1. Mounting Position Related Regulations

Note: The following recommendations do not constitute legal advice and should not be relied upon in lieu of consultation with your own advisors.

For Dash Cams in the US

Federal Motor Carrier Safety Administration (FMCSA) regulations permit dash cams to be installed in either of the following positions:

1. From the top of the windshield to 8.5 inches below the upper edge of the area swept by the windshield wipers.

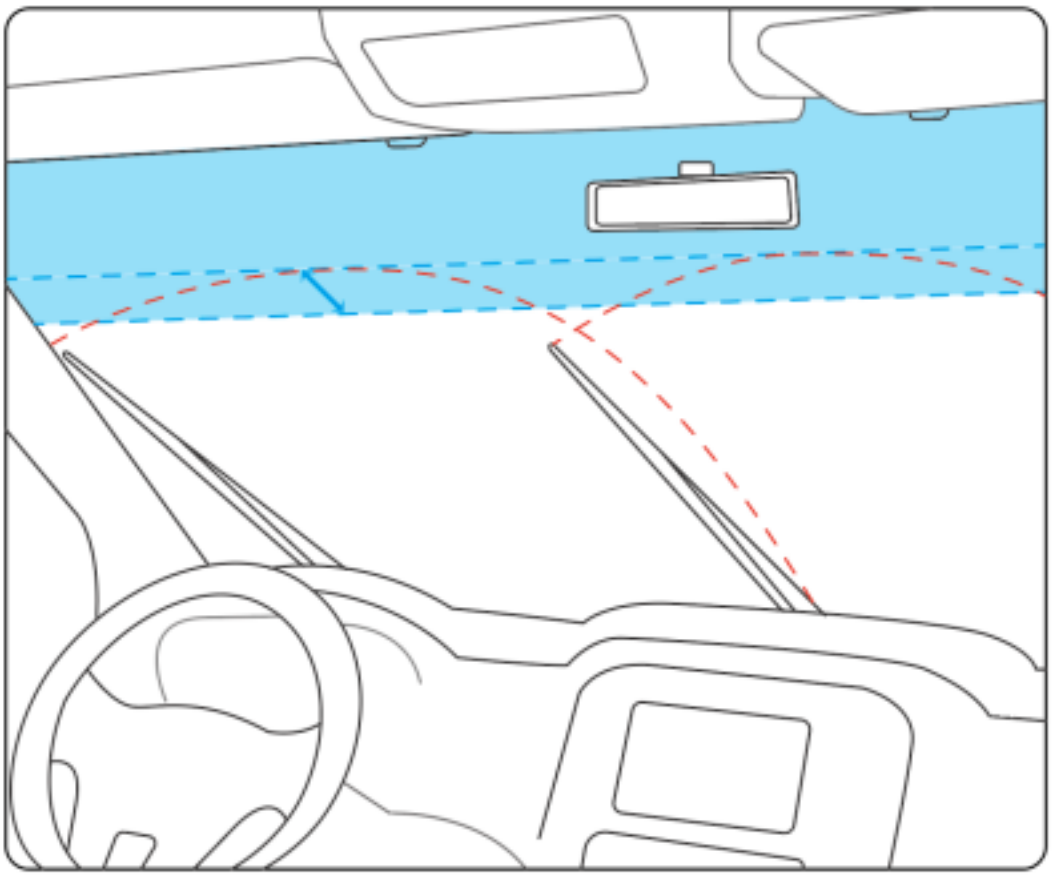

For Dash Cams in the UK

To determine camera placement options, the windscreen is divided into zones:

1. Zone A: This is a vertical area 29cm wide (for vehicles over 3.5 tons is 35cm), centered on the steering wheel and contained within the swept area of the windscreen.
1. Zone B is the remainder of the swept area of the windscreen.

No part of the dash cam (including the mount and wire) can intrude more than 10mm (1cm) into Zone A and more than 40mm (4cm) into Zone B.

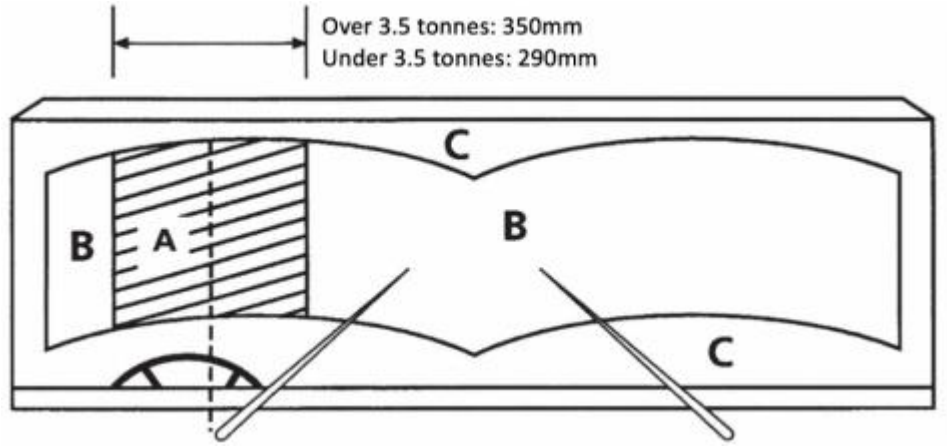

5.2. Mounting Position Recommendations

The KY6124 is recommended to be mounted on the upper edge of the windshield directly above the steering wheel, as shown in the red circle inside the picture.

In order to drive safely and maximize the AI function, the selection of the camera mounting position needs to be based on the following principles:

1. Do not block the driver's line of sight.
1. Do not interfere with the driver's driving.
1. The camera should be kept horizontal, not tilted.
1. The driver's face should preferably be in the center of the inside camera preview (available in "Viidure" APP).

The center point of the camera preview (available in "Viidure" APP) of the front camera should coincide with the end of the road.

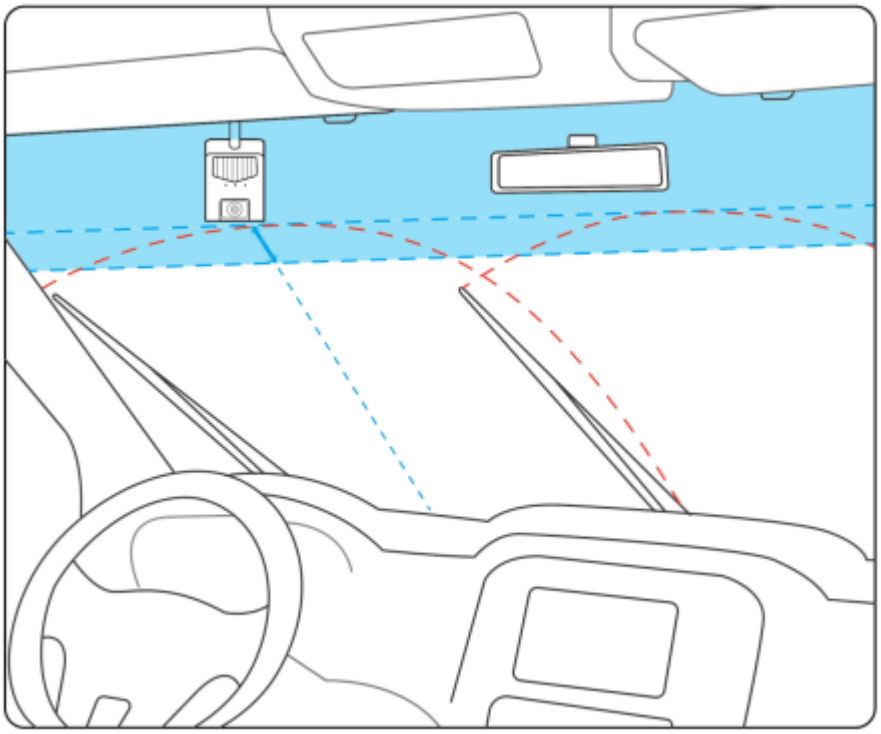

5.3. Installation instruction

Memory card installation

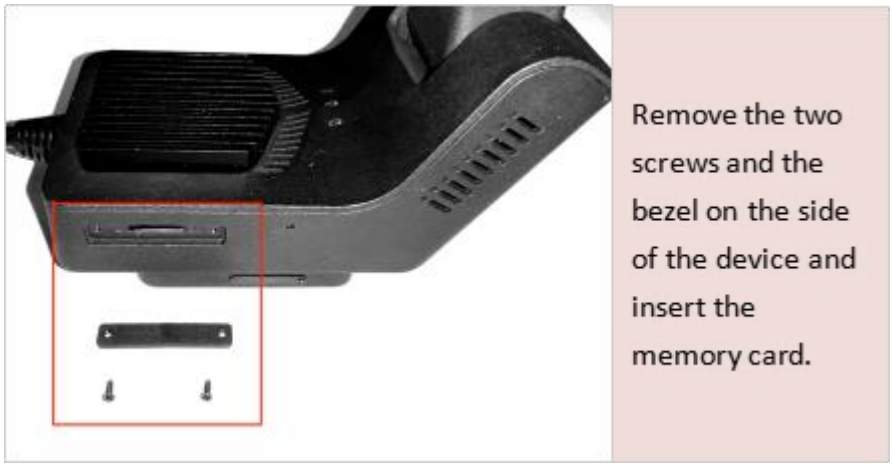

Line connection diagram (Car Charger Version)

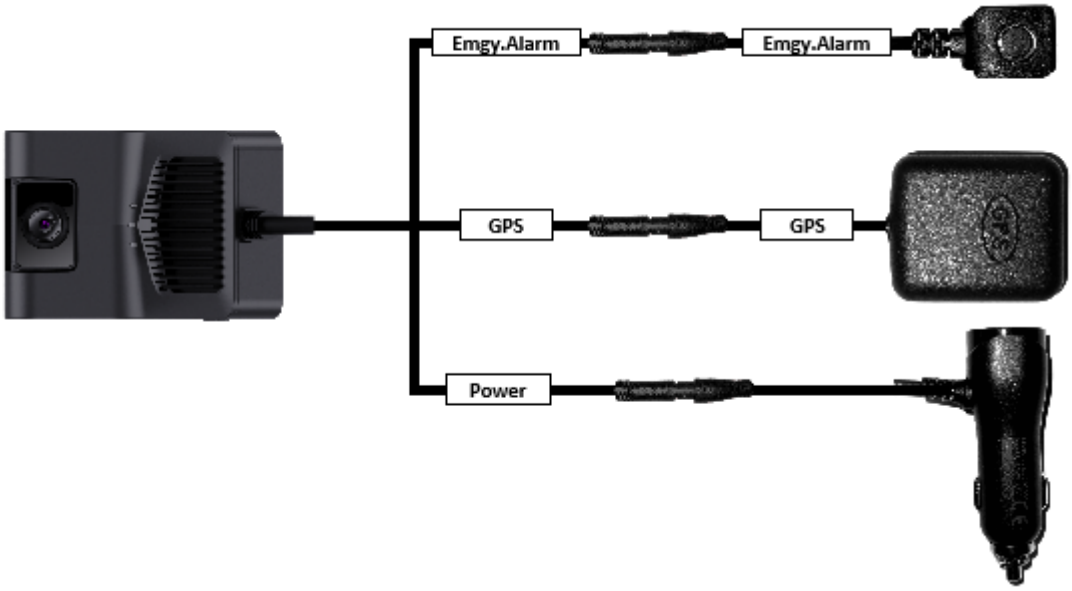

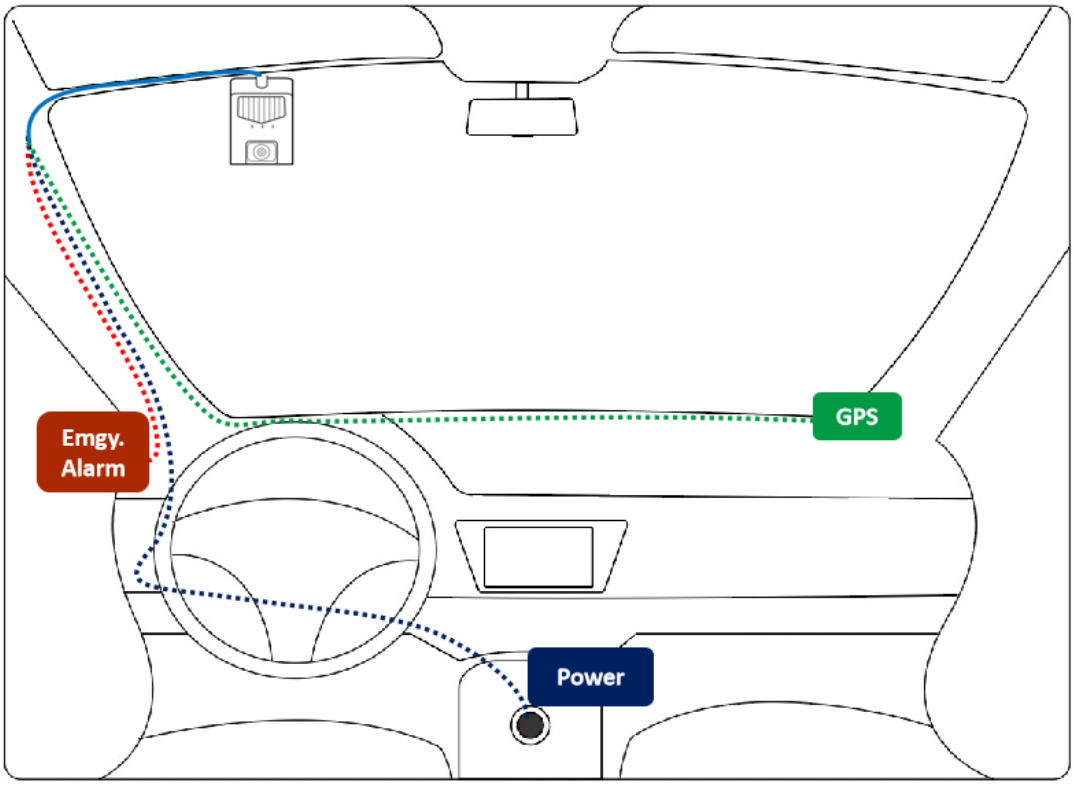

6. App Setting

6.1. Viidure App installation and preparation

Please download and install the Viidure App from the App Store of your Iphone (We are sorry that the Android version does not currently support this device and we will be releasing a new Android version with support as soon as possible).

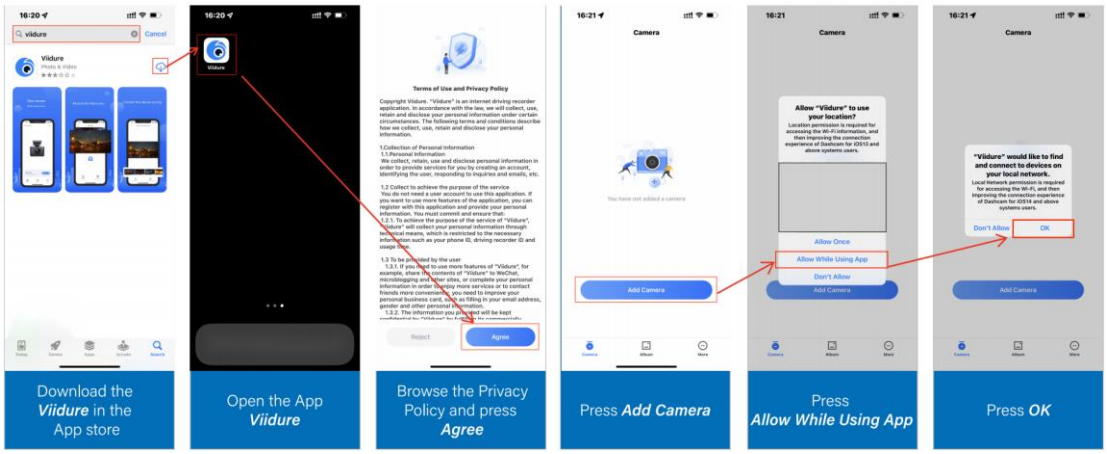

6.2. Connect to KY6124 via App

Follow the app's instructions to connect to the WiFi of the device. Press the WiFi button on the device to turn on WiFi.

Note: One KY6124 can only be connected to one phone at a time, otherwise an error

may occur.

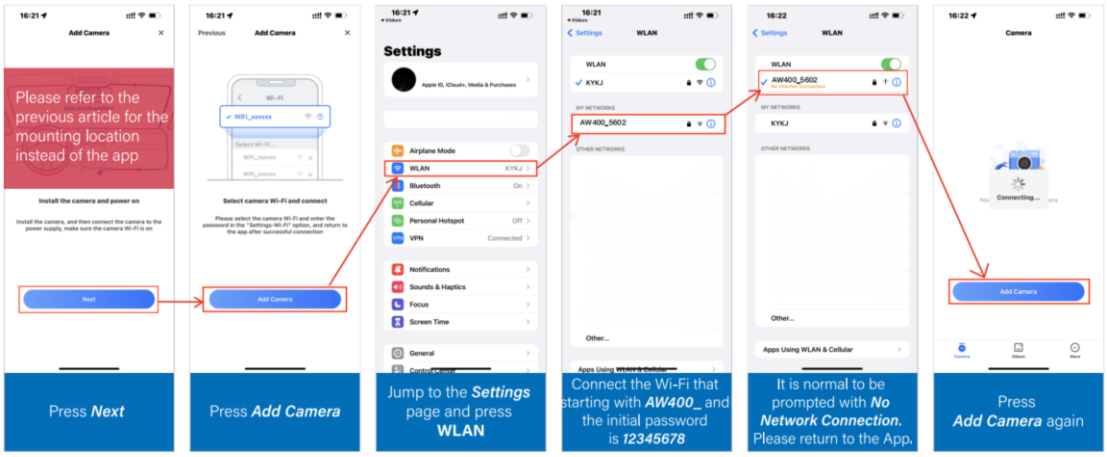

6.3. Format SD Card

When using the device for the first time or when replacing a new SD card, it is necessary to format the SD card. To do this, follow these steps:

1. Open the mobile app and go to Camera Settings.
2. Select "Format SD Card."
3. Once selected, the app will display a message "Format Successful."
4. Patiently wait for the device to emit a voice prompt stating "Memory card formatted successfully."

If the device displays a prompt "Memory card formatting failed, please try again," please repeat the process of formatting the SD card using the mobile app.

Note: It is essential to ensure the device's formatting success confirmation(device's successful formatting prompt) before taking out the SD card.

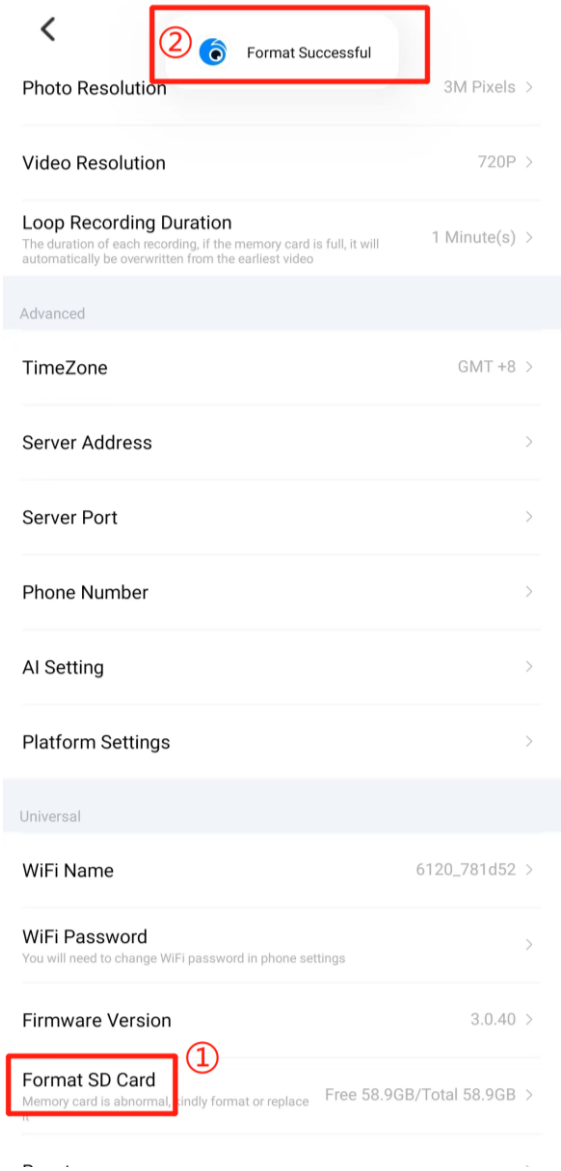

6.4. Camera Settings - AI Settings

Note: In the settings page, the device will enter a state of recording suspension. If you exit the app at this point, the camera will continue to remain in the stopped recording state until the next power-on. If you wish to restore the recording state, please return to the app's video preview interface.

After connecting KY6124, press Camera Settings - AI Settings to make sure the ADAS/DMS Renders are turned on.

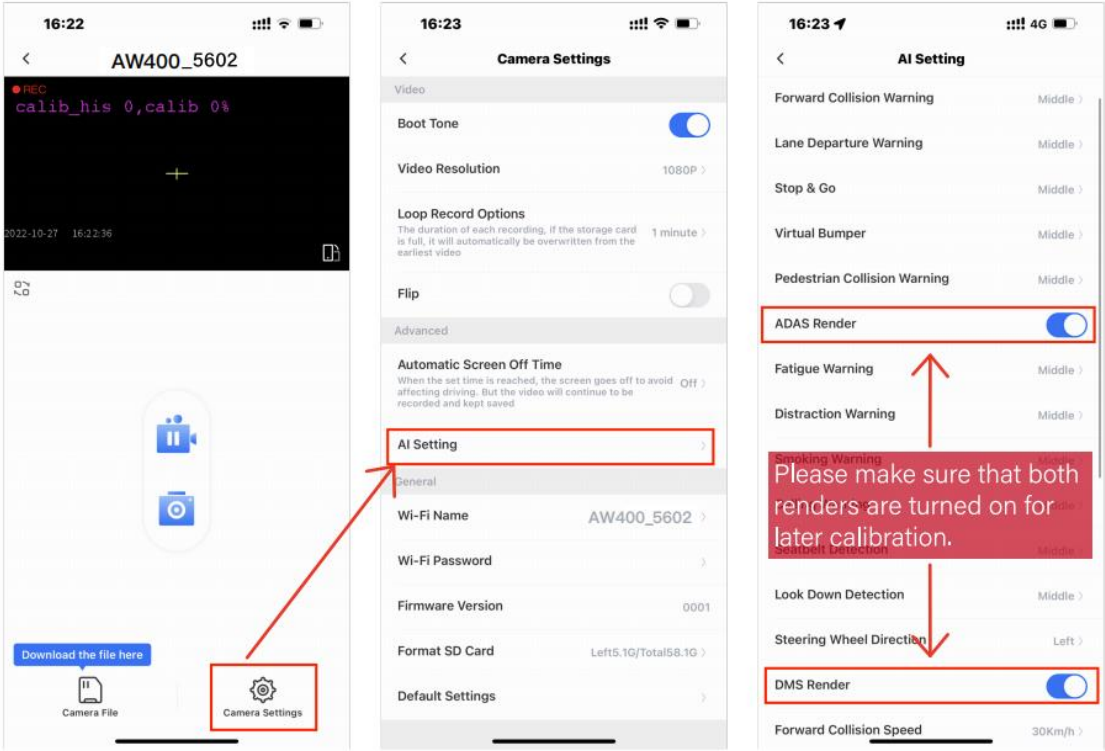

Note: If you want the calibration to be more accurate, you can fill in the parameters for the device position in the advanced settings, which are not required.

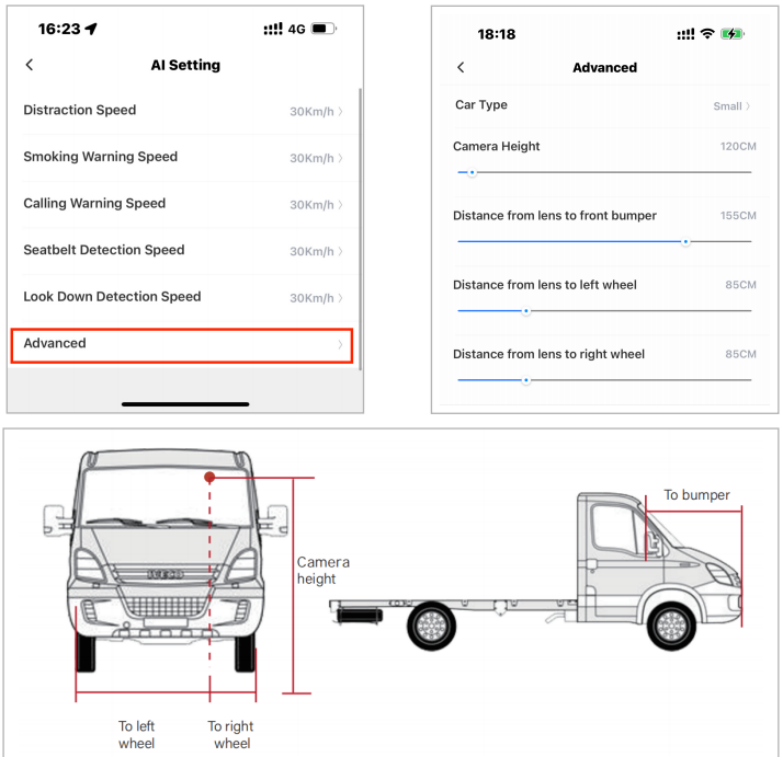

6.5. ADAS & DMS Calibration

After the KY6124 is connected, the real-time shot will be sent back.
Note: Both ADAS and DMS calibration will continue only when the movement speed >20km/h, otherwise the calibration progress (0~100%) will pause.

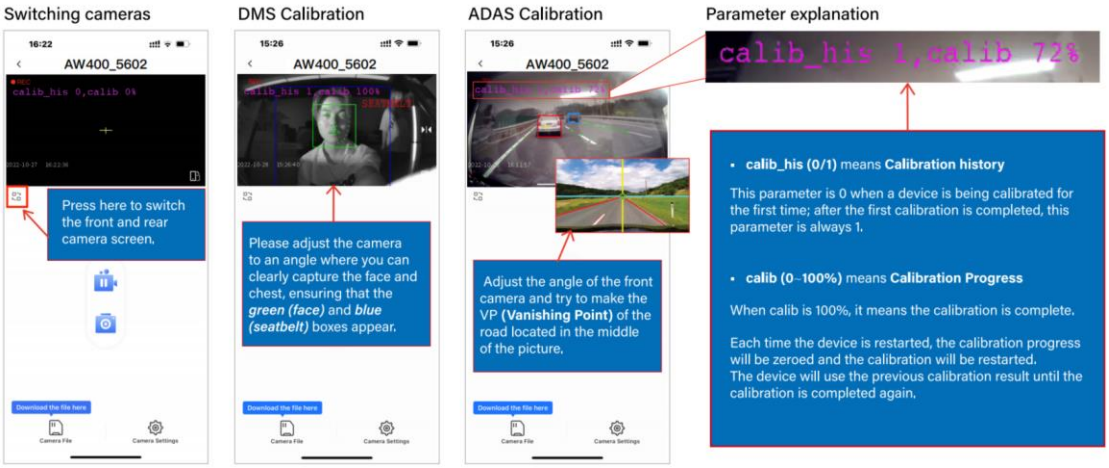

7. Firmware Upgrade

Method 1: Use APP to upgrade

1. Prepare a memory card of 16G or more.
2. Insert it into the machine and format it.
3. Put the firmware installation package "SigmastarUpgradeSD.bin" in the root directory of the memory card.
4. Insert the card with the upgrade file into the device.
5. Power the device and turn it on.
6. Connect the device with the app and tap "Camera Settings - Firmware Version".
7. Wait 1-3 minutes, the device will reboot and beep.

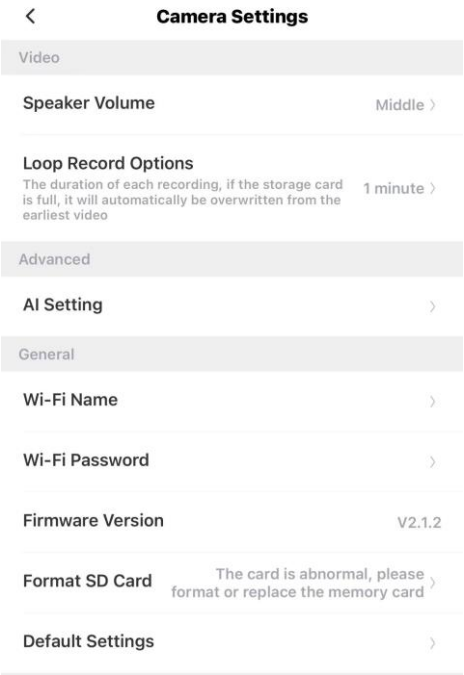

The following table shows the LED states when upgrading by APP. Progress 2-5 is the upgrade process, please do not power off or operate the device.

Upgrade Progress	LED State
1. Power on and ready to upgrade	● Blue - Yellow - Green
2. Press "Firmware Version"	● Off - Off - Off
3. Start upgrade / Upgrade in progress	● Purple - yellow - green

4. Device start up and configurating	● Blue - (Yellow/Off) - (Green/Off) ● Power on sound
5. Upgrade configuration finished and start recording	● Red - (Yellow/Off) - (Green/Off)

Method 2: Forced flashing

Forced flashing, used in the case of corrupted device firmware.

1. Prepare a memory card of 16GB - 128GB.
2. Insert it into the machine and format it.
3. Put the upgrade file in the root directory of the memory card, including "IPL, IPL_CUST, UBOOT, SigmastarUpgradeSD.bin".
4. Insert the card with the upgrade file into the device.
5. Power up the device and there is no response from the device at this point.
6. Wait 1-3 minutes for the device to power on and beep.

The following table shows the LED states when upgrading by SD card. Progress 2-4 is the upgrade process, please do not power off or operate the device.

Upgrade Progress	LED State
1. Power off and insert SD card with the upgrade file	● Off - Off - Off

2. Power on the device.	● Blue - (Yellow/Off) - Green/Off)
3. Start upgrade / Upgrade in progress, lights off in minutes.	● Purple(Red+blue) - Yellow - Green

4. Device Start up and configurating	● Blue - (Yellow/Off) - (Green/Off) ● Power on sound
5. Upgrade configuration finished and start recording	● Red - (Yellow/Off) - (Green/Off)

8. Simple Troubleshooting

Trouble	Solution
The recording is disabled	Please use a FAT32, read / write speed ⩾ Class10 memory card.
The loop recording is disabled	Please check the space of memory card is enough for recording.Please format the memory card if no enough space.
The recording is blurry	Please tear off the film on camera lens and clean up the lens and windshield.
The recording has no audio	Please make sure you turn on the audio recording in APP.
The dash cam is over temperature	The AI function of the device requires a lot of computing during operation, so it is normal to cause the body to heat up, especially in the area of the cooling fins. Please do not touch the cooling fins to avoid burns.
Recording files on the memory card can’ t display on the computer	Please change a new video player to display. If still unworkable, maybe the memory card get damaged, please try to format it or change a new one.
Others	If troubles above still can’ t be solved, please restore all settings to the factory settings or contact a local technical to support.

FCC Statement

This equipment has been tested and found to comply with the limits for a Class B digital device, pursuant to part 15 of the FCC Rules. These limits are designed to provide reasonable protection against harmful interference in a residential installation. This equipment generates, uses and can radiate radio frequency energy and, if not installed and used in accordance with the instructions, may cause harmful interference to radio communications. However, there is no guarantee that interference will not occur in a particular installation. If this equipment does cause harmful interference to radio or television reception, which can be determined by turning the equipment off and on, the user is encouraged to try to correct the interference by one or more of the following measures:

- Reorient or relocate the receiving antenna.
- Increase the separation between the equipment and receiver.
- Connect the equipment into an outlet on a circuit different from that to which the receiver is connected.
- Consult the dealer or an experienced radio/TV technician for help.

Caution: Any changes or modifications to this device not explicitly approved by manufacturer could void your authority to operate this equipment.

This device complies with part 15 of the FCC Rules. Operation is subject to the following two conditions: (1) This device may not cause harmful interference, and (2) this device must accept any interference received, including interference that may cause undesired operation.

RF Exposure Information

This equipment complies with FCC radiation exposure limits set forth for an uncontrolled environment. This equipment should be installed and operated with minimum distance 20cm between the radiator and your body.

ISED Statement

English:This device contains licence-exempt transmitter(s)/receiver(s) that comply with Innovation, Science and Economic Development Canada’s licence-exempt RSS(s). Operation is subject to the following two conditions:

(1) This device may not cause interference.

(2) This device must accept any interference, including interference that may cause undesired operation of the device.

The digital apparatus complies with Canadian CAN ICES-3 (B)/NMB-3(B).

French: Cet appareil contient des émetteurs/récepteurs exempts de licence qui sont conformes aux RSS exemptés de licence d'Innovation, Sciences et Développement économique Canada.

L'exploitation est soumise aux deux conditions suivantes :

(1) Cet appareil ne doit pas provoquer d'interférences.

(2) Cet appareil doit accepter toute interférence, y compris les interférences susceptibles de provoquer un fonctionnement indésirable de l'appareil.

l'appareil numérique du ciem conforme canadien peut - 3 (b) / nmb - 3 (b).

This device meets the exemption from the routine evaluation limits in section 2.5 of RSS 102 and compliance with RSS 102 RF exposure, users can obtain Canadian information on RF exposure and compliance.

cet appareil est conforme à l'exemption des limites d'évaluation courante dans la section 2.5 du cnr - 102 et conformité avec rss 102 de l'exposition aux rf, les utilisateurs peuvent obtenir des données canadiennes sur l'exposition aux champs rf et la conformité.

This equipment complies with Canada radiation exposure limits set forth for an uncontrolled environment.

Cet équipement est conforme aux limites d'exposition aux rayonnements du Canada établies pour un environnement non contrôlé.

This equipment should be installed and operated with minimum distance 20cm between the radiator & your body.

Cet équipement doit être installé et utilisé à une distance minimale de 20 cm entre le radiateur et votre corps.