EXO

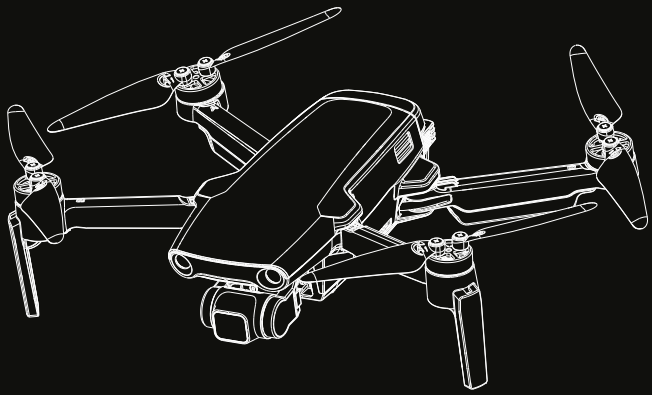

MINI PRO+

USER MANUAL

INFORMATION TO THE USER

All users must read product operating instructions and liability disclaimer before using and operating any EXO Drones products. By using a EXO Drones product(s), users accept the terms and conditions of EXO Drones liability and operational guidelines. This product is not suitable for minors under 14 years of age. When operating a EXO Drones product(s), users also accept all liability and responsibility for their own behavior, actions as well as any consequences resulting thereof while using a EXO Drones product(s). These products may only be used for purposes that are in accordance with local laws and regulations, and any applicable policies / guidelines EXO Drones may make available. Users agree to comply with these terms and conditions, along with any and all relevant policies / guidelines set forth by EXO Drones. Part of the details of this document may change with the upgrade of the product software version. Please read the upgrade details carefully before upgrading the software version.

INSTRUCTIONS

Some of the product flight functions are restricted in certain areas. Once you use this product, you must strictly read and follow the relevant ICAO regulations, local airspace and UAV regulations. You are liable for any non-compliance with the foregoing, and are responsible for the consequences of your actions as well as any indirect and / or direct liability that arises as a result of these limitations.

FLIGHT ENVIRONMENT REQUIREMENTS

(1) Select an open area to fly. Avoid high rise buildings and tall obstacles (such as trees and poles). Near buildings and obstacles, flight control signals and GPS signals are severely affected; GPS functions such as GPS mode and Return to Home may not function properly.
(2) Do not fly in bad weather conditions (such as in wind, rain or fog).
(3) Fly the aircraft in ambient temperatures of 0-40 ℃.
(4) When flying, please stay away from obstacles, people and crowds, high voltage lines, trees, water, etc.
(5) To avoid remote control signal interference, do not fly in strong electromagnetic environment (such as venues with radio stations, power plants and Phone antenna and TV towers).
(6) The aircraft cannot be used at or near the Arctic circle or Antarctica.
(7) Do not fly in no-fly zones.
(8) Do not operate the aircraft near high pressure lines, airports or areas with severe magnetic interference.

IMPORTANT SAFETY INFORMATION

OPERATION

Be extremely cautious and responsible when using the aircraft. Small electronic components can be damaged due to crashes or exposure to moisture / liquid. To avoid any injuries, do not use the aircraft with damaged components.

MAINTENANCE

Do not try to open or repair the units by yourself. Contact EXO Drones or EXO Drones authorized dealers for service. For more information, please visit the official website at www.exodrones.com

BATTERY

Do not disassemble, squeeze, impact, burn, drop or trample the battery. Do not short-circuit or put the battery terminal in contact with metal. Do not expose the battery to temperatures above 60 ° C. Fully Charge the aircraft battery prior to flight. Use only EXO Drones dedicated supplied charger for charging. Keep the battery out of the reach of children and away from any kind of moisture.

FLIGHT

Please be mindful of personal safety and the safety of others when operating and flying your drone.

-Do not fly in bad weather conditions.
-Do not attempt to catch the aircraft while it is in flight.
-This product is intended for experienced pilots over the age of 14.
-After every flight, completely disarm the aircraft motors and power off the drone. Then, power off the remote control.

READ THE DISCLAIMER AND SAFETY GUIDELINES FIRST BEFORE USE.

Symbol Explanation:

⊘ Prohibited Operation

⚠ Important Notice

Instruction

Explanation / Reference

EXO Drones Safety Notice for Intelligent battery

●If you do not plan to use the product for a long period of time, make sure to charge the battery to more than 7.4V. if the voltage is higher than 7.4V and the battery button is not pressed two days later , the battery will automatically discharge to 7.4V. Maintaining and storing the battery with about 7.4V can increase battery life.

● Please use only EXO Drones chargers or EXO Drones Charging Hub for battery charging.

● Do not charge in a flammable and explosive environment to prevent fire.

● Batteries need to be recharged if unused for over 3 months.

⊘ 1. Do not disassemble or reassemble the battery.
2. Do not short-circuit the battery.
3. Do not use or charge near sources of heat.
4. Do not put the battery in contact with water or any kind of liquid.
5. Do not charge batteries under sunlight or near fire.
6. Do not puncture or subject the battery to force of any kind.
7. Do not discard unused batteries to regular trash.
8. Never charge a battery that has been damaged, become deformed or swollen.
9. Do not solder on or near the battery.
10. Do not reverse charge or over discharge the battery.
11. Do not reverse charge or reverse the battery polarities.
12. Do not connect the battery to a car charger / cigarette lighter or any kind of unconventional power source.
13. This battery is prohibited to use with non-designated devices.
14. Do not mix other types of batteries with lithium batteries.
15. Do not exceed the specified charging time.
16. Do not place the battery in a microwave or in areas of high pressure.
17. Do not expose the battery to the sun or excessive heat.
18. Do not fly in places with strong interference (high-voltage line, power stations, base stations, high-speed rail lines, signal towers, etc.)
19. Do not use or charge in temperatures below 0 ℃ and above 45 ℃.
20. It is forbidden to discharge battery with a current above 5C. Please note that the discharge time should not be too long to damage the battery caused by excessive discharge!
21.Warning: Prohibited charging the battery without turning off the battery on the aircraft first !
22. If a newly purchased battery showing, leaks, possesses a bad smell or other abnormalities, contact and return the battery immediately to the vendor.
23. Keep away from the reach of children.
24. Use a dedicated battery charger only and follow all charging guidelines.
25. Adults must supervise minors, if allowed to charge the batteries even when using dedicated EXO Drones chargers.

Contents

INFORMATION TO THE USER
Important safety information
Battery use precautions

1 Aircraft
1.1 Aircraft Spare Part ---- 1
1.2 Aircraft Battery ---- 3
1.2.1 Instructions for Smart Charging Manager ---- 3
1.2.2 Aircraft Battery Installation ---- 4
1.2.3 Smart Battery Functions ---- 4
1.2.4 Precautions For Low Temperature ---- 5
1.2.5 Precautions For Battery ---- 5
1.2.6 Storage of smart battery ---- 5
1.3 Propellers ---- 6
1.4 Camera ---- 6

2 Remote Controller
2.1 Remote Controller Components ---- 7
2.2 Remote Controller Features ---- 9
2.3 Charging The Transmitter Battery ---- 11
2.4 Remote Control Diagram ---- 11
2.5 Remote Control Antenna Angle ---- 12
2.6 Transmitter Sticks& Thumbwheel Calibration ---- 12

3 Flight
3.1 Download the EXO Pro App ---- 13
3.2 APP flight control interface ---- 13
3.3 Pairing The Aircraft ---- 14
3.4 Compass Calibration ---- 15
3.5 Starting / stopping The Motors ---- 15

4 Aircraft Functions
4.1 Flight Control Mode ---- 17
4.2 Aircraft Indicator ---- 18
4.3 Return-to-home(Rth) ---- 18
4.4 Landing Apron Search ---- 20
4.5 Vision Systems and Infrared Sensing Systems ---- 20
4.6 Struggling mode ---- 23
4.7 Smart mode ---- 24
4.7.1 Creative Video ---- 24
4.7.2 Orbiting ---- 25
4.7.3 Waypoint ---- 25
4.7.4 Line Fly Mode ---- 25
4.7.5 Follow Mode ---- 26
4.7.6 Hyperlapse ---- 27
4.7.7 Panorama mode ---- 28
4.8 Gimbal Pitch Axis Adjustment ---- 29

FAQ
Disclaimer
FCC Information
FAA Remote ID Compliance Information

1AIRCRAFT

1.1 Aircraft Spare Part

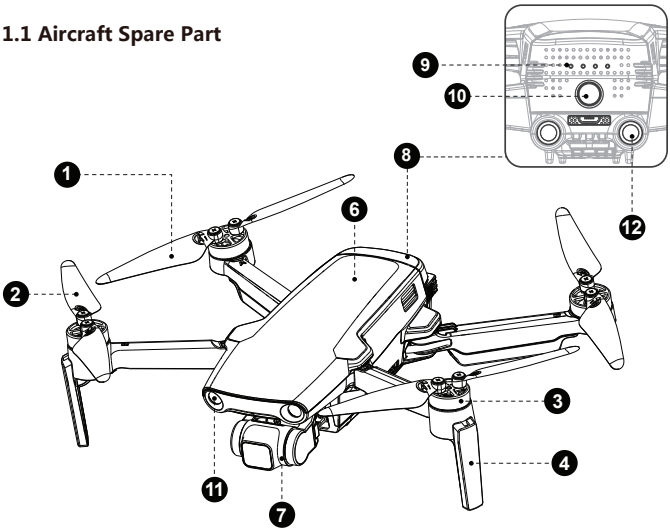

1. Propeller A
2. Propeller B
3. Motor
4. Tripod (With Antenna)
5. Gimbal Protection Guard
6. Body shell
7. 3-axis gimbal
8. Smart Battery
9. Battery level indicator
10. Battery power switch
11. Forward Vision System
12. Backward Vison System

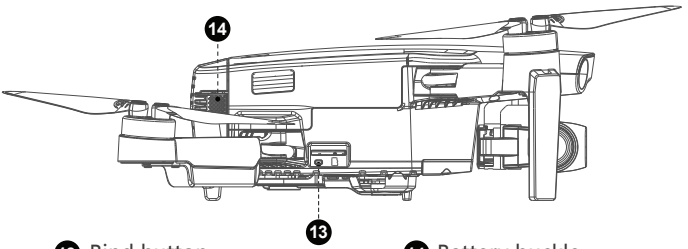

13 Bind button

14 Battery buckle

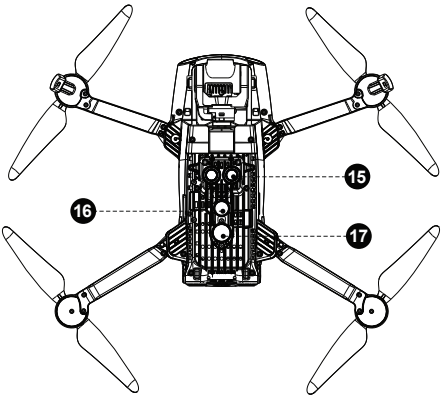

15 Infrared Assistant Hovering Sensing System

16 Downward Vision System

17 Auxiliary Light

Note: The aircraft generates heat during operation. Please avoid touching the ventilation area on the bottom of the aircraft after flight.

1.2 Aircraft Battery

1.2.1 Instructions for Smart Charging Manager

Aircraft Lithium Battery Capacity: 3000mAh, 7.2V lithium 2S intelligent battery.Consumers can charge it with an ordinary cell phone charger, or use the official standard 9V/2A charger. The time is about 1.5 hours. And also can use other third-party chargers with DC5521 heads with an output voltage range of 9V-12V and a current greater than 2A for charging.

① Plug the Micro USB or DC head into the charge manager, the middle of charge manager lights up to mean it starts working.

② With the battery off, insert the battery into the 4 ports of the Charge Manager, the Charge Manager flashes the indicator for the port that is charging, and the battery indicator flashes as well.

③ When the battery is fully charged, the battery indicator goes out, and the interface indicator corresponding to the charging manager becomes steady on, which means fully charged.

④ Based on the number above each interface in Charging Manager to charger the battery in order.

⑤When there is no Micro USB port plugged in, plug the battery into the Charge Manager and turn the battery on. When the middle of the Charge Manager lights up and the corresponding port starts flashing, the Charge Manager enters power bank mode and can charge other device with USB-A port which accept 5V/1A current.

Note: Please do not use Depth Vision Calibration Data Cable to plug into the Charging Manager to act as a charging adapter cable. The different structures may easily cause damage to the charging port.

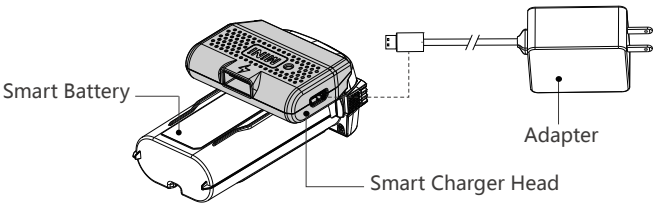

1.2.2 Aircraft Battery Installation

1. Take a fully charged battery
2. Insert the battery into battery compartment, while pressing the left and right edges behind of the battery (As shown in illustration) push in, until the battery buckles are fully locked. You should hear buckle locking sound.
3. Battery top should be flush with aircraft back that confirms battery is in place.

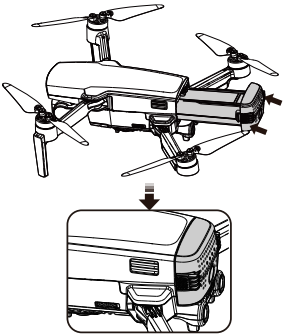

1.2.3 Smart Battery Functions

(1) Power display: The battery has a power indicator, which can display the current battery power levels.
(2) Upgrade mode: The smart battery can upgrade firmware. When the battery is in the upgrade state, the first and last two battery indicators are solid on.
(3) Auto-Discharging Function: To prevent swelling, the full battery automatically discharges to 7.4V to protect the battery , when it is idle for 2 days. (It is normal to feel moderate heat being emitted from the battery during the discharging process.)
(4) Balanced Charging:During charging,the voltages of the battery cells are automatically balanced.
(5) Overcurrent Protection:The battery stops charging if an excess current is detected.
(6) Overcharge Protection: The battery stops charging automatically once fully charged.
(7) Over-discharge Protection: Discharging stops automatically to prevent excess discharge.
(8) Short Circuit Protection: The power supply is automatically cut if a short circuit is detected.
(9) Battery Cell Damage Protection: EXO Pro App displays a warning message when a damaged battery cell is detected.
(10) Communication: Information about the battery's voltage, capacity, and current is transmitted to the aircraft.
(11) Hibernation Mode: When the battery is in the on state, if there is no connected device, the battery will automatically shut down within 3 minutes;When the power is less than 1%, short press the battery switch at this time. If the minimum power indicator flashes and the battery cannot be turned on, the battery can wake up by charging again.

Battery switch	Short press to check the battery level, it will turn off after 3 seconds
	Short press first and then long press to turn on / off, the indicator light turns on / off

1.2.4 Precautions for Low Temperature

(1) If the battery is used in a low-temperature environment (-10℃ to 5℃), please fully charge the battery and keep it warm (over 10°C.)
(2) Using the battery in an environment below -10 ° C may have unpredictable results.
(3) In a low-temperature environment, the actual discharge of the battery is likely to be different than the theoretical discharge capacity. It is recommended to stop flying and land immediately when the APP prompts a "low battery alarm".
(4) In a low-temperature environment, due to the limitation of battery output power, the wind resistance of the aircraft will be reduced. Please fly with caution.

1.2.5 Precautions For Battery

Be sure to fully charge each time before using the Intelligent Battery. Charge the intelligent battery only with EXO Drones supplied power adapter and intelligent charging modules.
(1) After each flight, battery temperature maybe higher. Allow Intelligent Battery to cool down to normal room temperature before charging.
(2) The charging temperature range of the intelligent battery is 5 ° C to 40 ° C. If the temperature of the battery cell is not in this range, the battery management system will stop charging. The optimal charging temperature range is 25 ± 3 ° C. Charging in this temperature range can extend the battery life.
(3) When charging or installing, please do not hot plug the battery, which may cause irreversible damage to the battery, so when pulling out or inserting the battery from the charging head, charge manager or drone, please make sure the battery is turned off properly.

1.2.6 Storage of smart battery

Due to the physical characteristics of electronic components, even in the dormant state, the smart battery still has weak current loss, which can regarded as a normal state. The current will continue loss to drain until the battery power is exhausted, and electricities draining behavior will cause irreversible damage to the battery cell. In order to avoid this situation, we need to pay attention to below points.
1. Before saving the battery for a long time, please fully charged the battery (or at least 70%) and then save it.

2. Take out the battery every six months and recharge it, To ensure that the battery power will not be exhausted under hibernation mode.
3. The battery should be stored in a dry place where away from acid and alkali, away from fire sources, and without violent vibration, pressure, and inflammables and explosives.
4. The battery will be in automatic discharge process and generate heat, so do not wrap the battery with materials with low thermal conductivity such as foam and fiber when storing, which is easily cause the battery burn out the battery cell or even fire.

1.3 Propellers

Before installing the propeller, please carefully check the letters by the aircraft motors and the letters on the propeller. You must match those letters when installing propellers; If the blade is damaged or needs to be replaced, unscrew the screw counter-clockwise to remove the propeller.
Be sure to replace the propeller together with the original new propeller screws to prevent accidental screw and propellers loss. (EXO Drones Standard accessories come with original screws)

EXO Drones brand new propeller screws

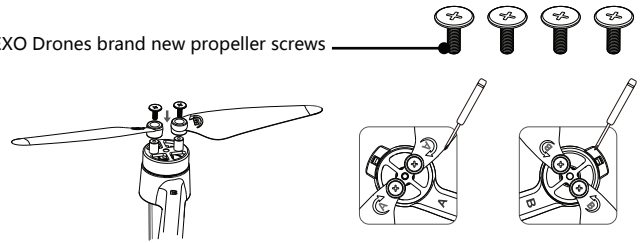

1.4 Camera

The EXO Mini Pro+ camera uses a Type 1/1.3 CMOS Sensor, supports 2.4um fusion large pixels, and f/1.85 super larger aperture.
(1.) When using the camera for the first time, please tear off the protective film of the camera lens before use.
(2.)If you want to wipe the lens during use, please wipe it gently with a professional optical dust-free wipe.
(3.)Please avoid immersing the camera in water.
(4.)The working temperature of the camera is from 10 degrees Celsius to 50 degrees Celsius, below 10 degrees Celsius or above 50 degrees Celsius, the camera may be blurred or unable to produce pictures normally.

2 REMOTE CONTROLLER

2.1 Names Of Remote Controller Components

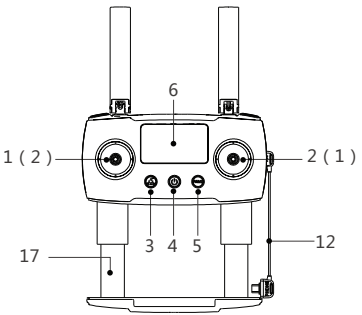

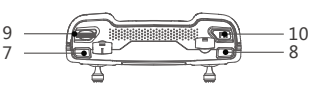

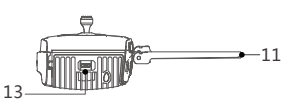

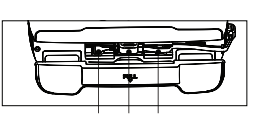

Japan Mode(Mode 1) :

(1) Throttle/ left & right flight controller levers

(2) Forward & Backward/Rudden stick

America Mode :

1.Throttle/Rudden stick controller levers

2.Forward & Backward / left & right flight controller levers

3.Long press for One key return (Aircraft will return to home point) / short press to cancel the return (When the aircraft is in retun status)

4. Power

5. F / N / S mode:
Movie mode / normal mode / sport mode

6. Display

7. Photo

8. Video

9. Gimbal Pitch Control dial

10. Custom button

11. Antenna

12. Remote control extension cable

13. Charging / Adapter Port

14. Lanyard hole of transmitter

15. Rocker storage slot

16. Cable storage slot

17. Smart device holder

America mode(Mode 2) and Japan mode(Mode 1) can switch in the EXO Pro APP settings:

① Open APP and choose relevant aircraft model to enter the flight control interface, and click the gear icon in the upper right corner to enter the settings.

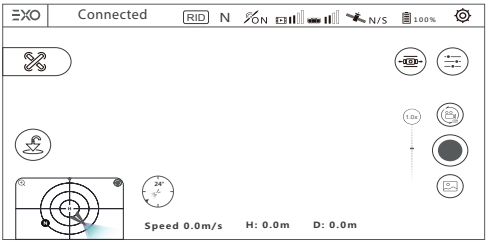

② Enter the "controller" option in the setting interface and click "Joystick settings".

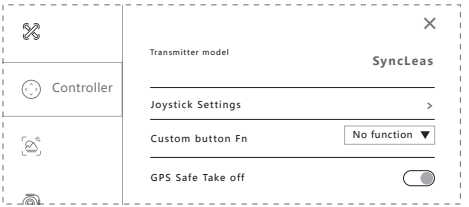

③ Choose the joystick mode.

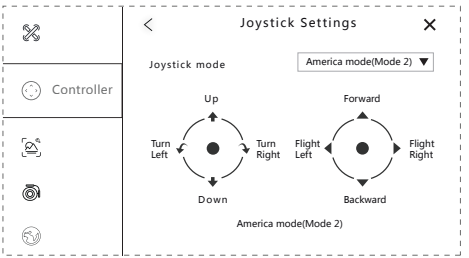

2.2 Remote Controller Features

S/N	Key / Switch	Function
(1)	Throttle / Rudder Stick (Mode 1)	Move the stick forward or backward to ascend or descend the drone. Move the stick left or right to rotate the drone Clockwise or counter clockwise.
(2)	Elevator / Aileron Stick (Mode 1)	Move the stick forward or backward to fly the drone forward or backward. Move the stick left or right to fly the drone left and right.
1	Throttle / Aileron Stick	Move the stick forward or backward to ascend or descend the drone. Move the stick left or right to fly the Drone left and right.
2	Elevator / Rudder Stick	Move the stick forward or backward to fly the drone forward or backward. Move the stick left or right to rotate the drone clockwise or counter clockwise.
3	One key return/ Cancel the returning home	Long press to enter the return mode (the aircraft returns to the take-off point), short press the button to exit One-key return (when the aircraft is in returning status); During the returning home, the remote control prompts "tick... Tick..." (one time/ per 2 seconds) Note: the One key return function on the remote control can only use when the aircraft GPS is normal and 6 or more satellits are found.
4	Power Switch	Short Press, then press hold to power on or off
5	F / N / S mode (Movie / Normal / Sport mode)	Movie mode: Flying speed of the drone is limited to 3m/s Normal mode: The maximum speed of the flying machine set by APP Flight, maximum 8m/s Sport mode: the maximum flight speed of the aircraft 16m/s
6	Display	Displays the flight parameters
7	Photo	Short press to take photos.
8	Video	Long press to start recording video, Short press to stop recording video
9	Gimbal Pitch control dial	Controls the pitch angle of the gimbal.

S/N	Key / Switch	Function
10	Custom keys	Long press the Fn+ wheel to adjust the zoom function. Press and hold the Photo+ wheel to adjust the brightness of the remote control screen. When the drone is not taking off, press the Fn button and the Video button for more than 3 seconds to activate the remote control code pairing operation. The remote control buzzer beeps when a low battery is triggered or Return to home is activated. Press the Fn button for 1.5 seconds, to stop beeping prompts. Long press the Fn button again 1.5 seconds to restart the beeping prompts. In custom keys, set the function on the APP and save it when the APP is not connected, [short press] Fn won't work. **Function 1:** Exit the current flight mode. In this mode, short press Fn to exit the current flight mode and the aircraft will hover. Function 2: short press Fn to execute gimbal return to normal state. Function 3: no function (factory default function)
11	Charging / Adapter Port	Charge the remote control or connect with a mobile device
12	Low Battery Warning	Low battery warning for remote control：Remote control "Beeps" <25%, di~di~, interval 10s <15%, di~di~, interval 2s <10%, didi~didi~, interval 1s
13	Standby Protection	If Remote controller is left on and unused, it will start beeping once every 3 seconds and switch to stand by mode. After 3 minutes of beeping, remote control will automatically shut down
14	Binding	Long press Fn button and Video button for more than 5 seconds to activate the Binding mode. When both buttons are pressed as the starting point for timing, the remote control will display Connecting during the binding process.
15	Low power mode	When the battery power is lower than 10%, the remote control will enter low power mode, at this time the remote control will cut off the power of the USB Host, the communication between the phone and the remote control will be disconnected, but the communication between the remote control and the drone will not be affected.

2.3 Charging The Transmitter Battery

The remote is charged using the Micro USB cable as shown:

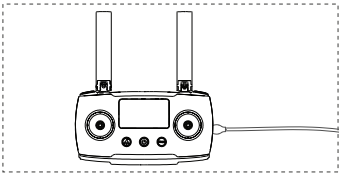

The remote control charging time is about 2.5 hours.The remote control battery indicator light will flash during charging, and will stay on solid when charging completes. The transmitter can use about 1.5 hours after fully charged.

2.4 Remote Control Diagram

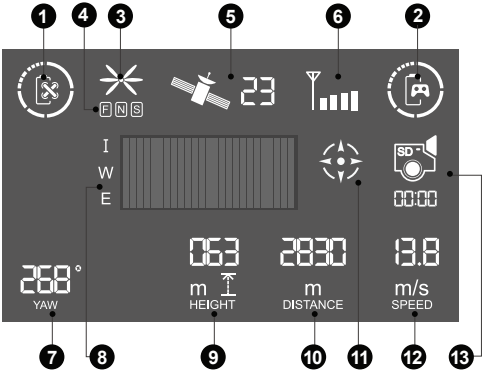

1. Aircraft Battery level
2. RC Battery level
3. Propellers Status
4. Aircraft Mode
5. Aircraft GPS Satellite
6. Aircraft Signals
7. Heading Angle
8. Character Area
9. Flight Height
10. Flight Distance
11. Compass Calibration
12. Aircraft speed
13. Photo / Video

2.5 Remote Control Antenna Angle

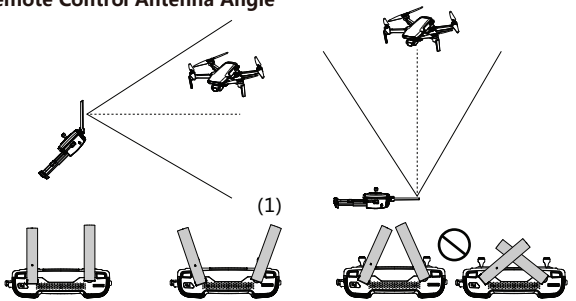

(1)

(2) (3) (4)

(1) Adjust the angle of the remote control antenna and let it face the flight direction of the aircraft as much as possible.
(2) Long-distance state, the distance between the two antennas is properly tightened to maintain the antenna directivity.
(3) Closer State, the two antennas are properly separated to maintain a wide receiving range.
(4) Do Not Form an occlusion or cross between the antennas.

2.6 Transmitter Sticks& Thumbwheel Calibration

Enter Calibration:(Picture 1) Push and hold both sticks to the upper left corner as shown in picture below, and power on the transmitter, the transmitter will enter calibration state and start Beeping; release the power button in calibration.

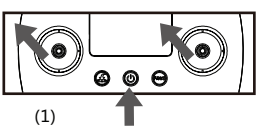

(1)

Exit: (Picture 2) Rotate both sticks in circles to their maximum travel for three times, and release the sticks;
(Picture 3) Next, move the thumbwheel back and forth to the maximum range on both sides three times, and finally release the thumbwheel to return to the center. Long press and hold any button except the power button until the remote control stops beeping and the screen lights on. Calibration is completed, and the remote control automatically exits calibration mode.

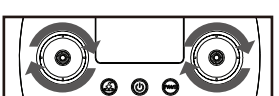

(2)

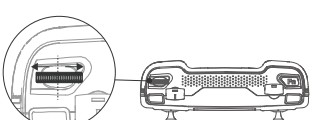

(3)

3.1 Download The EXO Pro App

Before flying, download and install the EXO Pro App. You could download the app for free by search in App Store (IOS) Or Goggle Play.

EXO PRO APP

3.2 APP flight control interface

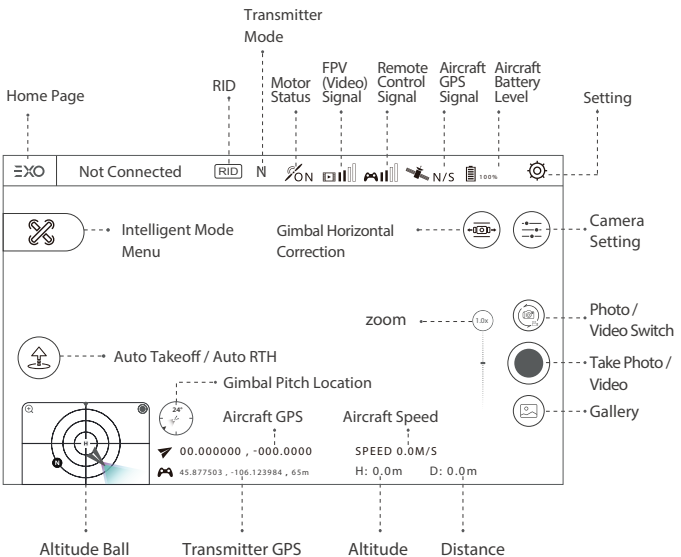

(Note: You need to turn on the "longitude and latitude coordinates" switch in the settings and then can get the aircraft GPS coordinates and the transmitter GPS coordinates.)

3.3 Pairing The Aircraft

(1) Run the EXO Pro APP, and select the aircraft model.
(2) Short press, the aircraft power button, then press and hold for a few seconds to turn it on.
(3) Short press the transmitter power button, then press and hold for a few seconds to turn it on, connect the transmitter to your mobile device with the RC cable.

Before Connecting

After Connecting

(4) Start binding (This step is only required when first binding or replacing the transmitter, you need to do it manually.)
1. Long press the aircraft bind button to enter the binding mode.
2. Press and hold the FN+ Video button combination to enter the binding mode, put the aircraft close to the remote control to complete the bind.

Tips:
-The binding process has been completed in the factory. The aircraft can take off directly.
-After entering binding mode, the Image Indicator(yellow) flash rapidly and become solid (yellow) after binding is successful.
-Please keep the distance between the aircraft and the remote control within 1 meter during binding process.
-The aircraft is unable to activate the binding during flight.