Jroll X10
User Manual

2023

X10, X10 Basics, X10 Colour, X10 Plus,
Applies to Product Models: X10 Special Edition.

Congratulations!

on your Jroll X10 purchase

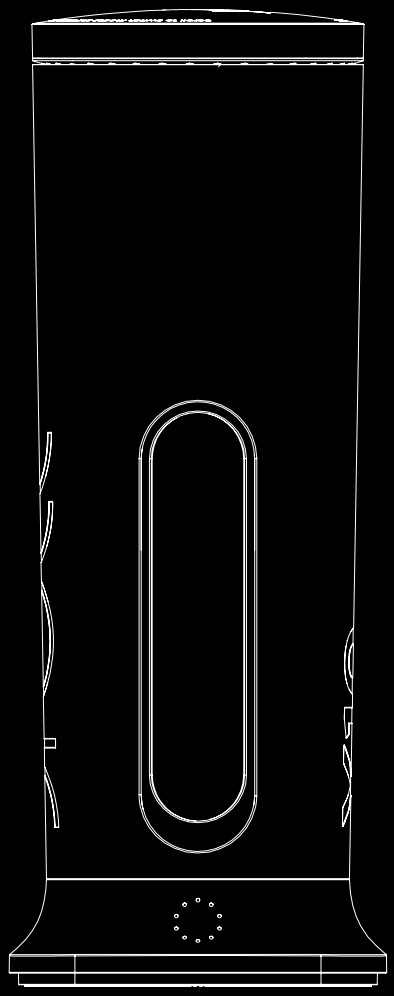

Welcome to the Jroll Family

Proof of Purchase & Product Registration

Always keep a copy of the sales receipt showing the date of purchase of your Jroll X10. Proof of purchase will assure you of in-warranty service. We recommend you register your Jroll X10 with us to ensure you enjoy our full warranty. More on our Warranty can be found at the end of this manual.
You can register your Jroll X10 by visiting jroll.com/welcome

Read this user manual carefully before you use the machine and save the manual for future reference.

Table of Contents

1. Symbols – Explanation 4

Important Basic Rules 5
Safety Recommendations 5
Caution 6
Electromagnetic fields (EMF)..... 6
Recycling..... 6

2. Introduction 7

3. What's in the Box 7

4. Functional Overview..... 8

5. First Time Use 12

Unboxing 12
Charging the Battery 12
Turning ON the Jroll X10 12
Loading the roll X10 with Paper Cones..... 13
Insert and Weigh your Material 14
Grind & Mix 14
Roll & ENJOY 14

6. Settings Mod..... 15

Stack 15
Level 15
Blue 15

7. Standby & Lock..... 15

Standby Mode 15
Lock 15

8. The Menu 16

Main Menu 16
Settings 16
Features 16
Messages 16
Troubleshoot 16

9. Cleaning & Maintenance 17

Cleaning the Main body 19
Cleaning the Grind & Mix unit 20
Removing the Bottom Tray 21
Reassembling & Inserting
the Grind & Mix unit 21

10. Universal Charger 22

11. Service 23

12. Intended Use 23

13. Jroll APP 23

14. Troubleshooting 24

CHECK 24
STUCK 24
CHARGE ME 24
LOCK 24
BLUE 24
In Case of Faults..... 24

15. Technical Specifications..... 24

16. Certifications..... 25

The Jroll X10 complies with the
following EC Directives 25
Distributor & Service Center..... 25

17. Warranty & Liability..... 26

Warranty 26
Exclusions and Limitations 26
Return Policy..... 27
Limitation of Liability..... 27
Counterfeiting 27

1. Symbols – Explanation

Warning!
To avoid injuries, it is important you observe the instructions marked with this symbol.

Safety Recommendation!
To avoid damage to the equipment, it is important you observe the instructions marked with this symbol.

Note/Tip!
This symbol gives you technical information or useful tips regarding the Jroll X10.

Protect from direct sunlight and heat sources (such as ovens, heaters, etc.).

WARNING Choking Hazard: Small parts. Not intended for children under 3 years. Handle with care. Use with adult supervision.
This appliance can be used by children aged from 8 years and above and persons with reduced physical, sensory or mental capabilities or lack of experience and knowledge if they have been given supervision or instruction concerning use of the appliance in a safe way and understand the hazards involved.

WARNING Cut Hazard - Contact may result in injury. Always keep blades away from fingers and body. Handle with care. Keep out of reach of children.

The machine was introduced after 13 August 2005. It may not be disposed of in normal household waste. The X on the bin indicates the necessity of disposing of this machine separately. The machine contains a built-in rechargeable lithium-ion battery that must be discharged before disposal.

KEEP DRY

Protect against water, moisture and humidity.

When this symbol is shown, water may be used for cleaning a specific component(s) of the Jroll X10.

When this symbol is shown, the specific component(s) can be cleaned in a dishwasher.

Danger

Do not immerse the motor unit in water nor rinse it under the tap.

KEEP DRY

Important Basic Rules

- Download the current detailed version of the User Manual from www.jroll.com.
- Read these instructions carefully and completely before operating the Jroll X10 and USB-C Charger.
- Always follow the instructions in the User Manual when using and servicing the Jroll X10.
- For their safety, do not allow children to play with the machine.
- The **Jtubes** contain small parts that can cause choking. **Keep out of reach of children.**
- Do not operate the machine unattended.
- Do not expose your Jroll X10 to extremely high or low temperatures.
- Do not store your Jroll X10 or any of its components in or near heat sources.
- Do not use your Jroll X10 if it becomes immersed in any liquid.
- Do not expose the machine, charger and USB-C Cable to water, moisture and humidity.
- Never use any accessories or parts from other manufacturers or that Jroll does not specifically recommend. If you use such accessories or parts, your warranty becomes invalid.
- Do not use the machine, charger, and USB-C Cable in an inappropriate, incorrect or unreasonable manner. The manufacturer does not accept any responsibility for any damage resulting from this.

Safety Recommendations

Risk of Injury

- Before you connect the machine to the power, make sure that the voltage indicated on the charger corresponds to the local power voltage.
- Before any maintenance work and during thunderstorms, the Jroll X10 and USB-C Cable must be switched off and disconnected from the power supply.
- Make sure that the USB-C Cable is not damaged by bending, crushing or pulling.
- Do not use your Jroll X10 if it appears to be damaged, broken or is operating in an unusual or erratic manner.
- If the charger or USB-C Cable is damaged, you must have it replaced by Jroll, a service center authorized by Jroll, or similarly qualified persons to avoid a hazard.
- Do not use multiple sockets and/or extension cables. Never connect this machine to a timer switch, to avoid a hazardous situation.
- Any attempt to repair a damage yourself will invalidate the warranty. For more, read everything about our Warranty section of this manual.
- Do not disassemble or tamper with your Jroll X10. Any inappropriate, incorrect, or irresponsible use will void any warranty and can result in serious injury.
- Be careful when you handle the Grind & Mix unit, the blades are very sharp.
- If residue of spices or herbs sticks to the wall of the Grind & Mix unit, remove the unit from the Jroll X10 before cleaning. More can be found in the Cleaning section of this manual.
- Do not use in a potentially explosive or flammable atmosphere.
- Do not touch the blades, especially when the machine is turned ON. The blades are very sharp. Always remove the Grind & Mix unit from the machine before handling.

- If the blades get stuck, the Jroll X10 will display “STUCK”. Remove the Lid and the Grind & Mix unit. Check if any of the inserted spices or herbs are restricting the blades to rotate. More about this can be found further below in the Troubleshooting section.
- Be aware of the danger of strangulation through the USB-C Cable.
- Use your Jroll X10 only with legal plants, herbs or spices. The Jroll X10 is not meant for use with tobacco and nicotine related products.
- Your Jroll X10 contains Lithium-ion batteries and should be recycled or disposed of in accordance with local requirements to avoid potential injury and/or environmental harm.
- Do not dispose of the battery or any component of your Jroll X10 in a fire as it could cause an explosion or other serious injury.

Caution

- Always remove the Grind & Mix unit before you reach into the unit with your fingers or an object (such as a spatula or brush).
- Do not remove the Lid when the machine is performing a function (such as Grinding, Rolling, etc.). To stop Grind or Roll function, press the Top Button.
- Do not overfill the Grind chamber. It is recommended to not insert more than 10 grams of spices or herbs at a time.
- It is recommended to clean the Grind & Mix chamber before first time use. Clean the unit frequently for optimal performance and hygiene.
- This machine is intended for household use only.

Electromagnetic fields (EMF)

The Jroll X10 complies with all standards regarding electromagnetic fields (EMF). If handled properly and according to the instructions in this user manual, the machine is safe to use based on scientific evidence available today. This manual covers the following product models: X10, X10 Basics, X10 Colour, X10 Plus, X10 Special Edition.

This device complies with Part 15 of the FCC Rules. Operation is subject to the following two conditions: (1) this device may not cause harmful interference, and (2) this device must accept any interference received, including interference that may cause undesired operation.

Caution: Changes or modifications not expressly approved by the party responsible for compliance could void the user’s authority to operate the equipment.

Note: This equipment has been tested and found to comply with the limits for a Class B digital device, pursuant to Part 15 of the FCC Rules. These limits are designed to provide reasonable protection against harmful interference in a residential installation. This equipment generates, uses and can radiate radio frequency energy and, if not installed and used in accordance with the instructions, may cause harmful interference to radio communications. However, there is no guarantee that interference will not occur in a particular installation.

If this equipment does cause harmful interference to radio or television reception, which can be determined by turning the equipment off and on, the user is encouraged to try to correct the interference by one or more of the following measures:

- Reorient or relocate the receiving antenna.
- Increase the separation between the equipment and receiver.
- Connect the equipment into an outlet on a circuit different from that to which the receiver is connected.
- Consult the dealer or an experienced radio/TV technician for help.

RF Exposure Compliance
This equipment complies with FCC radiation exposure limits set forth for an uncontrolled environment. This equipment should be installed and operated with minimum distance 20cm between the radiator and your body. This transmitter must not be co-located or operating in conjunction with any other antenna or transmitter.

Your product is designed and manufactured with high quality materials and components, which can be recycled and reused. When you see the crossed-out wheel bin symbol attached to a product, it means the product is covered by the European Directive 2002/96/EC:

Never dispose of your product with other household waste. Please inform yourself about the local rules on the separate collection of electrical and electronic products. The correct disposal of your old product helps prevent potentially negative consequences on the environment and human health.

2. Introduction

This machine is equipped with a built-in safety lock. You can only use the machine after you correctly assemble the following parts on the motor unit:

- The Lid, and
- The Grind & Mix unit

Without the lid, the machine cannot be operated.
Without the Grind & Mix unit, the machine notifies you of missing unit.
If these parts are assembled correctly, the built-in safety lock is unlocked.

Intended Use

The Jroll X10 is used to process herbs or spices or other dry plant variants, by grinding and mixing such material and depositing the ground mixture in portable Jtubes or paper cones (wrappers). The machine can be used for grinding and mixing of herbs or spices, for products used in cooking, aromatherapy or for consumption via inhalation (using paper cones). The Jroll X10 is not meant for use with tobacco and nicotine related products. **This machine is intended for household use only.**

WARNING
Do Not Put Hand below the top part of the Grind & Mix unit, while unit is inside the X10 main body. First extract the Grind & Mix unit, In case you would like to remove material from the unit.

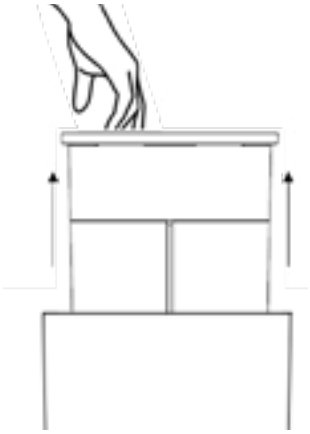

Dos & Don’ts

Dos

- DO store your X10 in a secure place, out of the reach of children.
- DO only insert and use materials for its intended use and maintenance as described in this complete manual.
- DO only use the custom X10 USB-C charger provided.
- DO firmly push the USB cable all the way in to charge (do not plug it in partially).
- DO check and clean the Grind & Mix unit frequently to ensure smooth and consistent operations.

Don'ts

- DO NOT put your hands to far inside the Grind & Mix unit, or anywhere near the blades while the unit is inside the main body of the X10.
- Always remove the Grind & Mix unit before you reach into the unit with your fingers or an object (such as a spatula or brush).
- DO NOT insert hard materials, or any other type of material other than dry herbs or spices into the Grind & Mix unit. This can cause unwarranted damage and serious injury. Use only as intended.
- DO NOT let children use the X10 or any of its accessories. Store outside of the reach of children. Blades are sharp and the Jtubes contain small parts that can cause choking. Keep out of reach of children.
- Do not remove the Lid when the machine is performing a function (such as Grinding, Rolling, etc.). To stop Grind or Roll function, press the Top Button.
- Do not overfill the Grind chamber. It is recommended to not insert more than 10 grams of spices or herbs at a time.
- It is recommended to clean the Grind & Mix chamber before first time use. Clean the unit frequently for optimal performance and hygiene.

3. What's in the Box

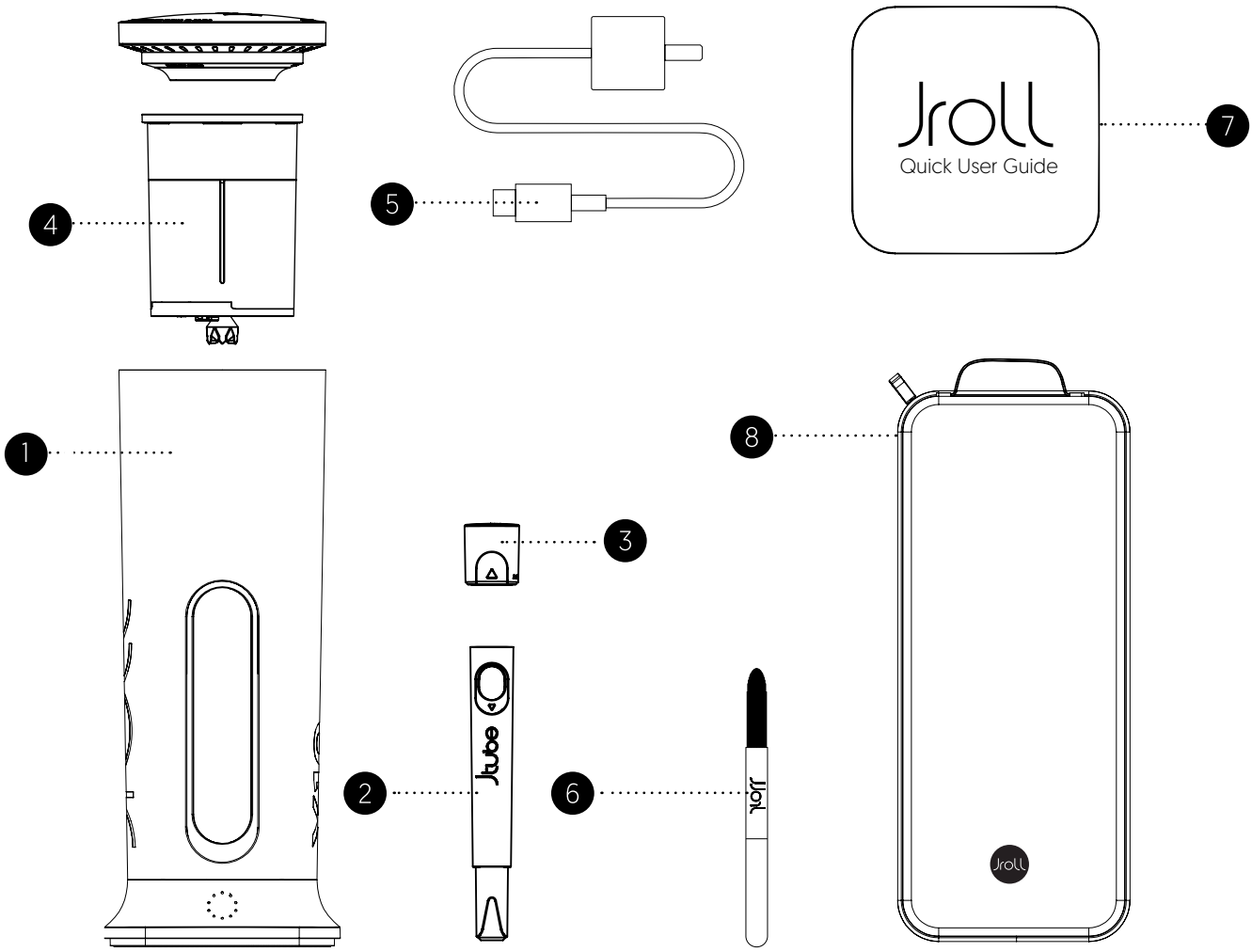

1. Jroll X10
2. 10 Jtubes
3. 10 Jtube Caps
4. Grind & Mix unit
5. USB-C Charger with cable
6. Cleaning Brush
7. User Guide (concise)
8. Carry Case

4. Functional Overview

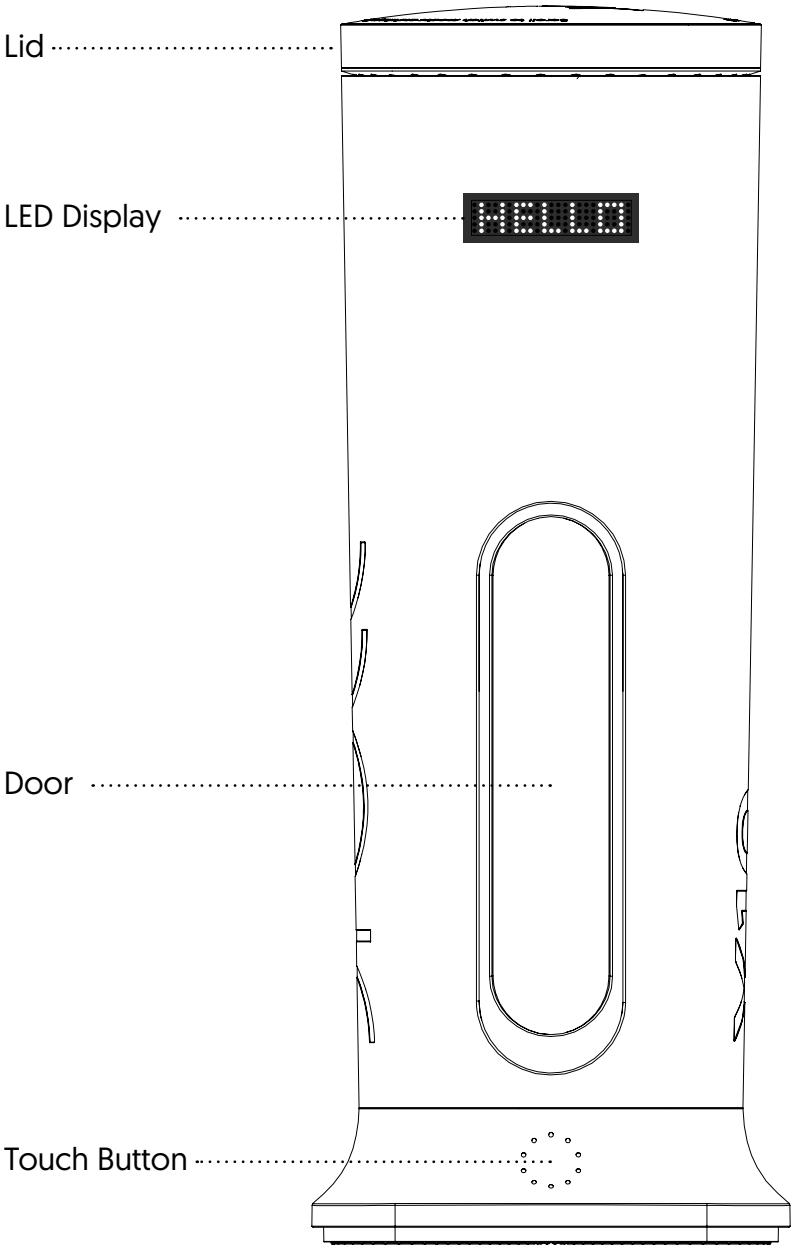

WARNING: Do not apply pressure on the door to avoid damage to the component. Damage resulting from pressure is not covered by the warranty

Front View

Back View

Top Button

Jtube

Jtube Socket

USB-C Port

ON/OFF Switch

Lid

Main Button

Scroll Menu

Silicone Seal

Grind & Mix unit

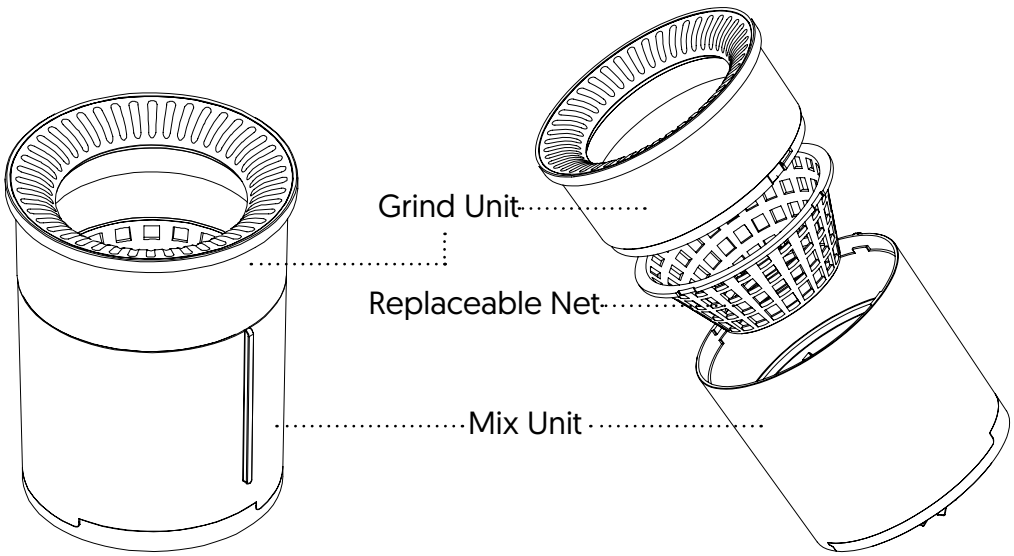

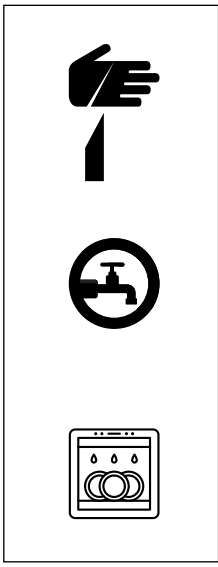

When inserting the Grind & Mix unit into the machine, make sure that the Lip is pointing towards to you (see image below on the left) and aligns with the Groove inside the Jroll X10 and the small printed triangle on the device (see image below on the right). Do not force the unit inside. If aligned, as described above the Grind & Mix unit will slot in smoothly. **Inserting the unit incorrectly can cause serious damage!**

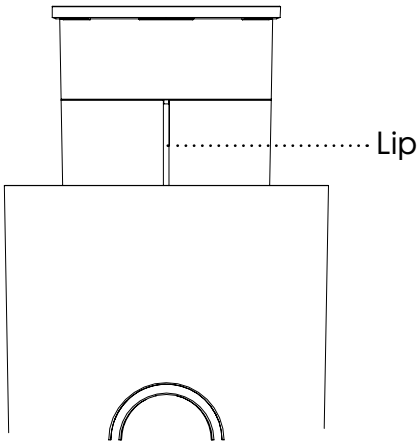

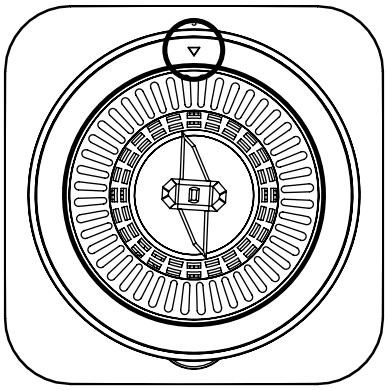

NOTE: The Grind & Mix unit is the ONLY part of the Jroll X10 whereby water or a dishwasher can be used for cleaning purposes.

Jtube

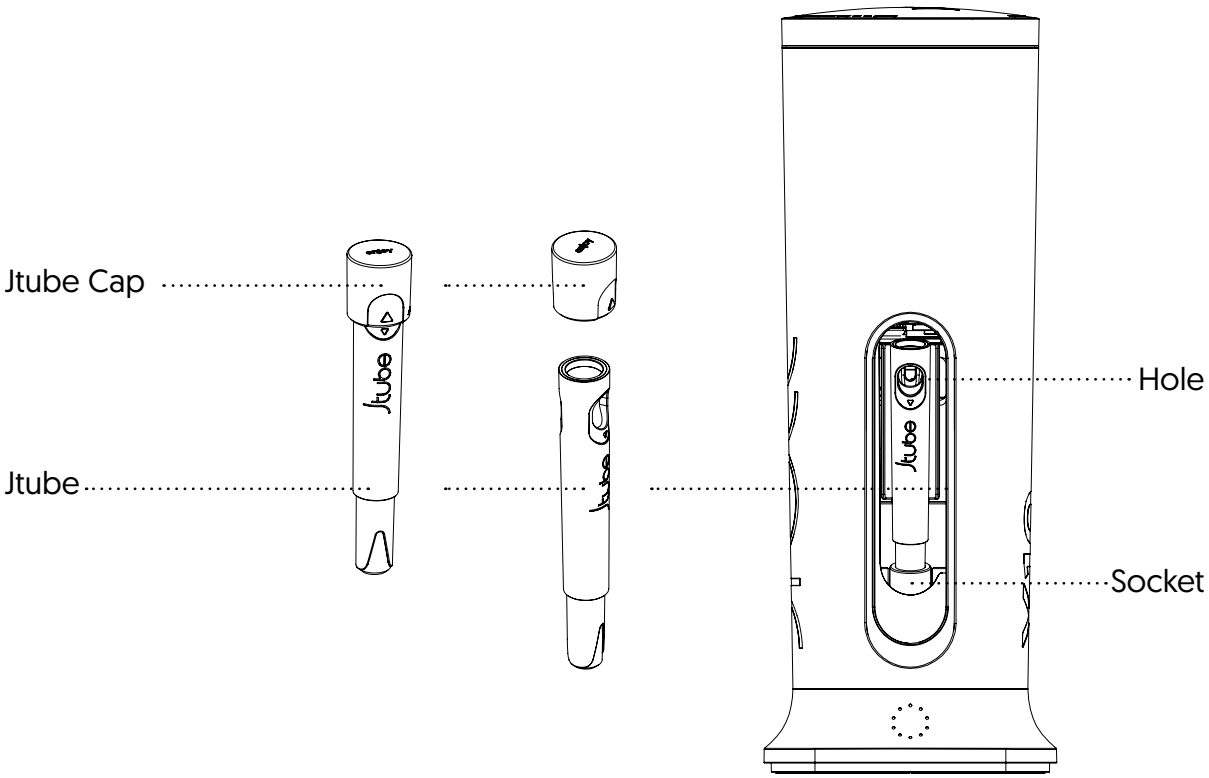

The Jtubes are designed for standard King-Size paper cones, which can be obtained from various suppliers and brands. When placing the Jtubes in the Jroll X10, make sure the hole is facing you and gently place the Jtube into the Socket. Embedded magnets at the bottom of the Jtube assist with proper seating of the Jtube.

To avoid undesired operation, serious damage and prevent potential blockage of the door, when inserting the paper cone in the Jtube, you must:

- Make sure the Sockets are clean from residue before placing a Jtube.
- Make sure the paper cone is fully submerged and the top of the paper cone is flush with the top of the Jtube.
- Damages to the sockets from improper and incorrect use is not covered by the warranty

The Jroll X10 has a safety feature when the door gets blocked or obstructed when closing. In such an event, the display will indicate “CHECK” and the door will open. Please remove the Jtube and check for anything that could have cause the obstruction.

5. First Time Use

Unboxing

- Check section **'What's in the Box'** and make sure all items are included. In case any items are missing, contact as at help@jroll.com.

Charging the Battery

The battery charge of the new product has a level of up to 80%.

- Fully charge the battery before first use.
- Plugin the provided Jroll X10 charger to the mains, lift the silicone cover on the back of the Jroll X10, and connect the USB-C Cable to the USB-C charging socket.

When USB-C cable is plugged in and the X10 is charging, the device will not function and will only show the battery percentage status. To fully use device, unplug the charger.

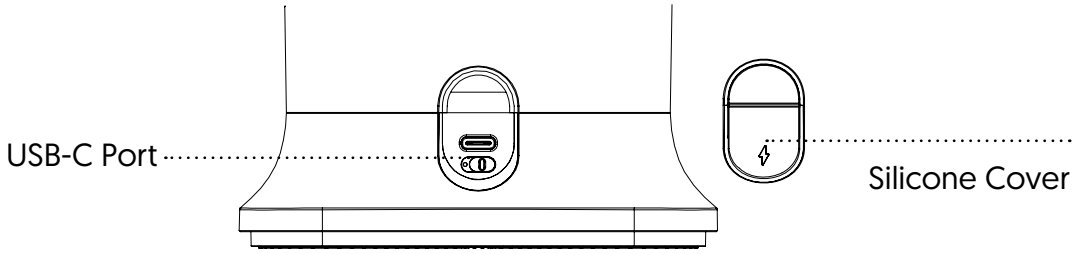

To check the battery status, scroll through the menu until you see a number with a % sign, indicating the charge level of the battery. In this mode, the illumination of the LED display will pulse brighter when the Jroll X10 is plugged in and charging.

Turning ON the Jroll X10

Turn the machine ON, lift the silicon cover on the back of the Jroll X10 and use the switch to turn ON. The switch is behind the silicone cover.

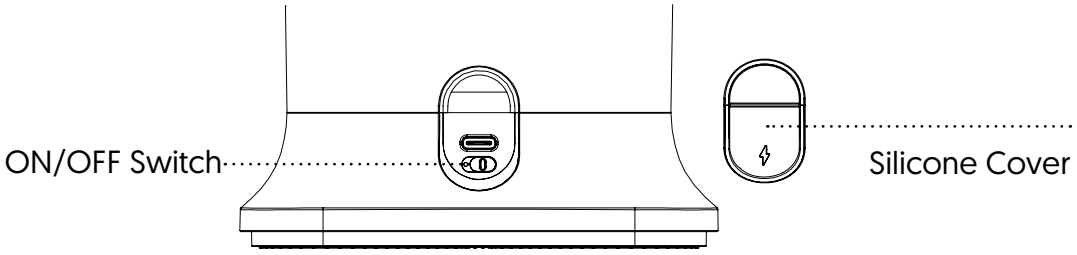

When switching ON the Jroll X10, you will be greeted with "HELLO" and the Jroll X10 will perform a status check to see how many Jtubes hold paper cones. The number of available cones is indicated by the Touch Button at the bottom of the Jroll X10. Once the check is done, the Jroll X10 goes into "ROLL" mode.

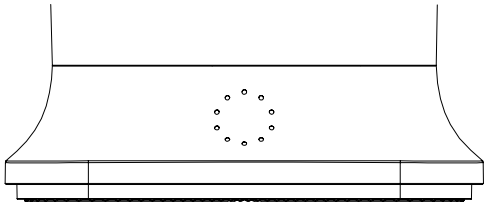

Depending on the number of Jtubes holding paper cones, the number of LED lights will illuminate accordingly. When none of the LED lights are illuminated, the Jroll X10 needs to be loaded with paper cones.

Loading the Jroll X10 with Paper Cones

When the Jroll X10 is empty, simply press the Top Button when in Roll mode. The Door will open and you will automatically be taken to the LOAD mode. Otherwise turn the Lid to scroll through the Menu and select “LOAD”. Next, press the Top Button. The Jroll X10 will now look for a Jtube that does not hold a paper cone. The Door will open and the Jtube will be ejected. Following, you can insert a paper cone into the Jtube. After inserting the paper cone, press the Top Button again. The Door will close and another empty Jtube will be ejected for loading. Continue to insert more cones as desired by following the same steps. When finished, turn the Lid to the next desired function and the Door will close automatically.

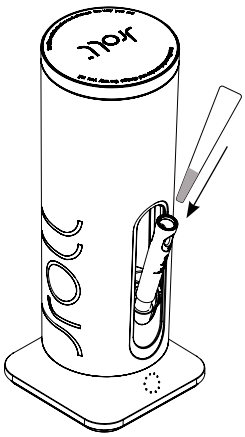

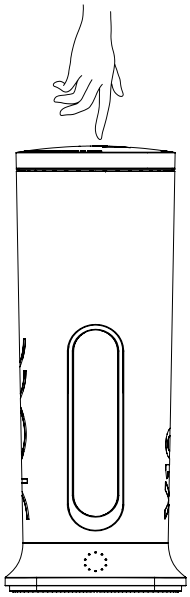

When inserting the paper cone in the Jtube, make sure it is fully submersed and the top of the paper cone is flush with the top of the Jtube to avoid undesired operation and potential blockage of the door.

The Jroll X10 has a safety feature when the door gets blocked or obstructed when closing. In such an event, the display will indicate “CHECK” and the door will open. Please remove the Jtube and check for anything that could have cause the obstruction.

Insert and Weigh your Material

To insert your herbs or spices, remove the Lid from the Jroll X10. When the Lid gets removed, the “SCALE” will be activated. When the display indicates “0.0”, proceed and insert your material.

When you are done inserting the material, close the Lid. The Jroll X10 will automatically go into “GRIND” mode. Press the Top Button to start the Grind & Mix process.

Overfilling the Grind & Mix unit can cause the blades to get blocked and stuck. In such case, first remove the Grind & Mix unit from the Jroll X10 and then reduce the content or remove the material blocking the blades.

Grind & Mix

When in “GRIND” mode, press the Top Button to start the Grind & Mix process. Depending on the amount of material inserted, the time of Grinding will be adjusted accordingly. The more material, the longer the timer of the grinder is set.
The Grind & Mix process is finished when the timer on the display has reached “0” and the Jroll X10 automatically enters into “ROLL” mode.

Roll & ENJOY

While in “ROLL” mode, press the Top Button to fill a paper cone. Pressing the Top Button, the Jroll X10 looks for a Jtube containing a paper cone, before it starts the filling process.
When the process is done, the Door opens and a Jtube containing the filled paper cone can be removed. You can also take out only the filled paper cone, by pushing down on the Jtube and removing the paper cone. The display will show “ENJOY”.
When removing the Jtube or cone, the Door will automatically close. If the Jroll X10 holds more ground material and paper cones, press Top button again to fill another paper cone.
When the Grind & Mix unit runs empty while performing a ROLL function, the Jroll X10 will display “EMPTY”. To continue, more material needs to be inserted.

The ROLL or GRIND process can be stopped by pressing the Top Button.

6. Settings Mode

The Jroll X10 allows you to set various stacking modes for compressing the mixture deposited in the paper cone and has two levels settings for adjusting the fill height.

To adjust the settings, turn the Lid and scroll to “SET” and press the Top Button.

Stack

By selecting “STACK” in the “SET” menu, you can adjust the stacking setting from LOW, MED, HIGH, to EXTRA. In LOW setting, the stacking function is at its lowest and in EXTRA mode it is set to the highest.

Level

When selecting “LEVEL” in the “SET” menu, you can choose between LOW and HIGH. The filling level during the ROLL process will be adjusted accordingly.

Blue

In order to activate Bluetooth® module, scroll to “SET” in the menu and press and hold the Top Button until “BLUE”. If “BLUE” on the display is flashing, then Bluetooth is turned off. Press Top Button to turn the Bluetooth® ON. If “BLUE” is not flashing, Bluetooth is activated, to turn off, press Top Button.

When Bluetooth is activated, turn on Bluetooth on your mobile device and scan for Jroll X10 (WLT825X_B44D). Select Jroll X10 to connect and pair with your mobile device. You can now use the Jroll App.

7. Standby & Lock

Standby Mode

To place the Jroll X10 in Standby more, or to wake it up, press and hold the Touch button at the bottom of the machine until the LED lights form a complete circle.
When waking up, the Jroll X10 will greet you with “HELLO”.
When placed in standby mode, the Jroll X10 will say “BYE”.
The Jroll X10 enter standby mode after 2 minutes of no use.

In the rare case you forgot to take out a filled paper cone, the Jroll X10 will take it back and store it for you. On you next ROLL, the already filled cone will be ejected.

Lock

Too lock the Jroll X10 from unwanted operations, press and hold the Touch Button until the display shows “LOCK”. Now the Jroll X10 is locked and cannot be used until unlocked.
To unlock, press and hold the Touch Button until display shows “LOCK”. Now turn the Lid and select “UNLOCK” and press the Top Button to unlock.

8. The Menu

Main Menu

GRIND	Grinds, mixes and stores.
ROLL	Fill the cones with the ground material.
LOAD	For Loading the device with cones.
CLEAN	For removing all the Jtubes.
90%	Shows charge level of battery
SET	Settings Menu

Features

LOCK	Lock the Jroll X10
OPEN	Unlock the Jroll X10 is LockedFor
BLUE	Bluetooth® Settings.

Settings

STACK	Settings for changing the Stacking Level.
LOW	Low Stacking Level.
MED	Semi Stacking Level.
HIGH	High Stacking Level.
EXTRA	Extra High Stacking Level.
LEVEL	Settings for changing the Stacking Level.
LOW	Low Filling Level.
HIGH	High Filling Level.

Messages

HELLO	Jroll X10 greets you when switched ON
ENJOY	Your cone is ready. Enjoy!
BYE	Jroll X10 going to sleep (standby mode)
CHARGE	Jroll X10 need charging
LOCK	Jroll X10 is Locked
EMPTY	The Grind & Mix unit is Empty.

Troubleshoot

CHECK	Door is being blocked by object.
CHECK	Grinder cannot turn blades.
↳	Grind & Mix unit missing.
-.-.-	Too much material has been inserted.

9. Cleaning & Maintenance

To keep the Jroll X10 working optimally, you must clean it frequently.

Cleaning the Main body

For convenience, the Jroll X10 has a CLEAN mode. To use this mode, turn the Lid and scroll to “CLEAN”. In this mode, the Jroll X10 will eject in sequence, one by one the Jtubes (whereas in LOAD mode, only Jtubes that do not hold a paper cone are ejected).

In CLEAN mode, take out all the Jtubes from the machine. When taking out the last Jtube, and while the Door is open, switch of the Jroll X10 from the switch at the back.

Make sure the Jroll X10 is unplugged from the USB-C charger. Next, remove the Lid and the Grind & Mix unit.

We recommend using a compressed air spray to remove dust or plant-based residue from inside the Jroll X10, by spraying air into the Door opening and from the top.

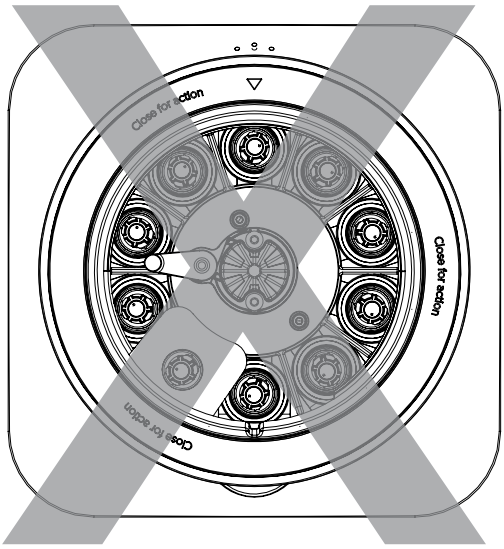

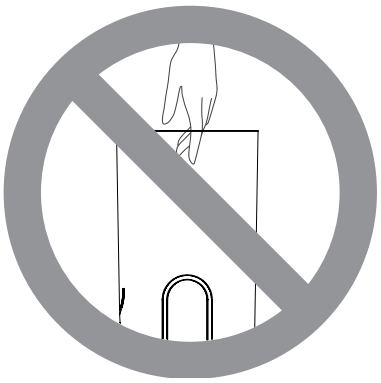

DO NOT place you hand or any other object inside the Jroll X10 from the top when Lid and Grind & Mix unit are removed. Damages from such actions are not covered by the warranty.

KEEP DRY

The surfaces of the Jroll X10 and the Lid can be cleaned with the provided Cleaning Brush, a paper or cotton cloth. DO NOT use water when cleaning the Jroll X10’s motor unit or the Lid.

Cleaning the Grind & Mix unit

The Cleaning Brush, cotton swabs and paper or cotton cloths are suitable for manual cleaning of the Grind & Mix unit. Although the unit can be cleaned using a dishwasher, .we recommend the use of warm rinsing water or isopropyl alcohol as solvents

CAUTION!
Isopropyl alcohol is flammable and may easily ignite.
Follow the safety instructions isopropyl alcohol manufacturer!

DO NOT submerge in isopropyl alcohol for more than 20 minutes and avoid prolonged contact in general. Can cause material damage.

To clean the Grind & Mix unit. remove the Lid and extract the unit.

Twist the top part of the Grind & Mix unit in opposite direction to the bottom part to disassemble the unit for easy cleaning. After disassembly, the Net can be removed, for easy access into the Mix chamber.

Spray isopropyl alcohol onto the dirty areas and use a brush / cotton swab / cotton cloth, together with warm rinsing water to remove residue.

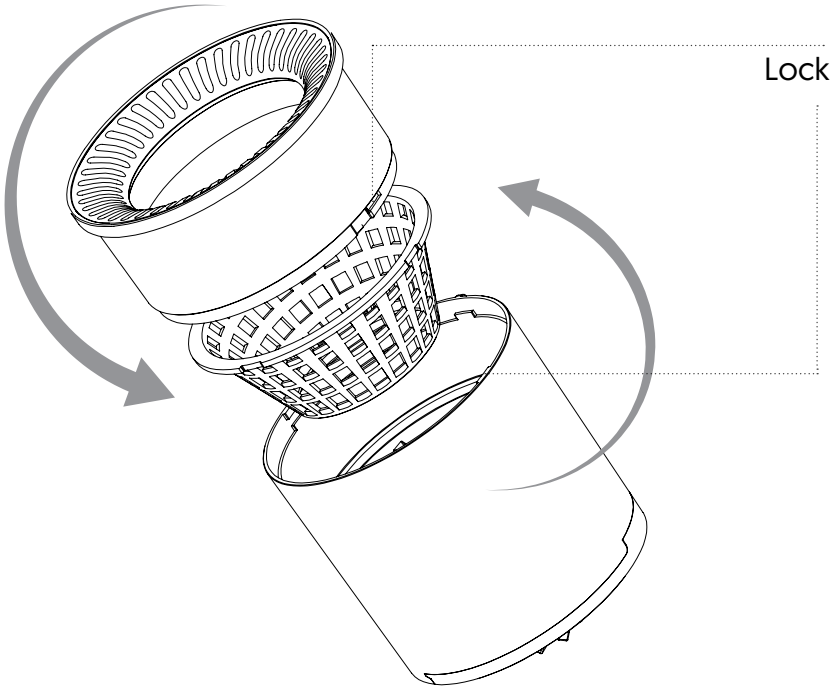

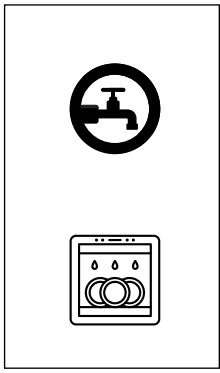

NOTE: The Grind & Mix unit is the only part of the Jroll X10 whereby water or a dishwasher can be used for cleaning purposes

Removing the Bottom Tray

On the bottom of the Grind & Mix unit is a tray that can be removed for cleaning. This tray catches some of the fine ground material during the ROLL process.

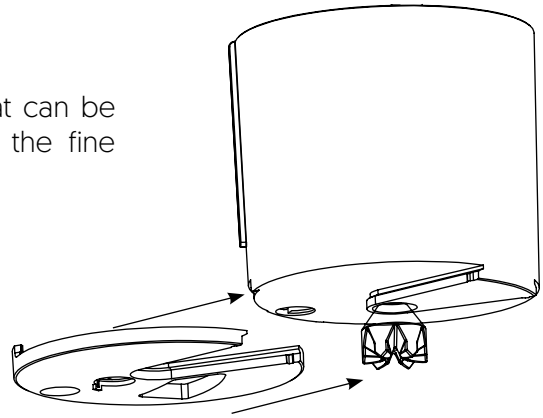

Make sure to check the tray frequently, especially after grinding, to ensure optimal function of this part and avoid material accessing the Jtube carousel part of the machine.

Reassembling & Inserting the Grind & Mix unit

Assemble the parts in reverse order. When assembling, make sure that all silicon seals are properly placed and seated. The top and bottom of the Grind & Mix unit should align with the lock into position when connecting the two parts and twisting into lock position.

When you are done with cleaning, insert the Grind & Mix unit back into the Jroll X10, place the Lid and switch the Jroll X10 ON. The Door will close and the Jroll X10 will initiate a paper cone check (every time it is switched on).

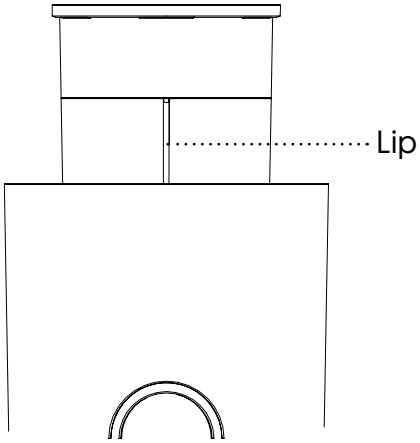

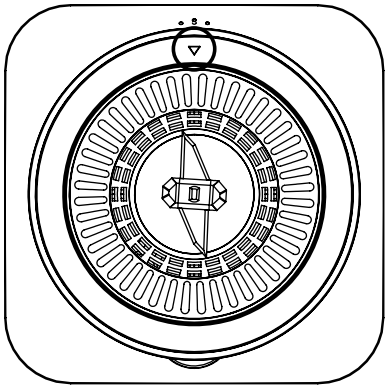

When inserting the Grind & Mix unit back into the Jroll X10, you must make sure:

- The Grind & Mix unit is totally dry.
- The Lip is aligned with the Groove on the inside of the machine and the small white triangle as shown in image on the right above.
- The Groove and Lip will guide you to place the Grind & Mix unit correctly.

WARNING: When placing the Lid back, make sure the Lid is seated properly, In case you see a gap, as indicated in the image below on the right, turn OFF the Jroll X10 and: remove the Lid and the Grind & Mix unit.

Check if you can see anything that could cause the Lid not to close properly.
Place the Lid back and turn ON the Jroll X10 (without the Grind & Mix unit inside).
Allow the start up to finish and put the Grind & Mix unit back into the machine,
Place the Lid on the Jroll X10. If the gap persists, turn OFF the Jroll X10 and contact us at help@jroll.com.

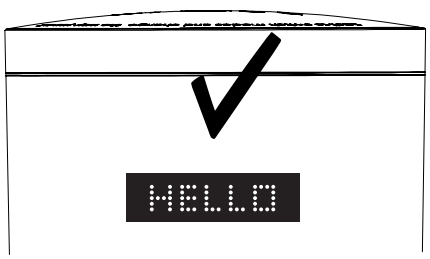

10. Universal Charger

The Jroll X10 comes with a universal charger. Follow the instructions shown in the images below to assemble a desired according to your location.

To place or replace the regional adapter component, press the small button and follow the arrows on the component (see right image below) and twist clockwise to Lock or counter-clockwise to Open.

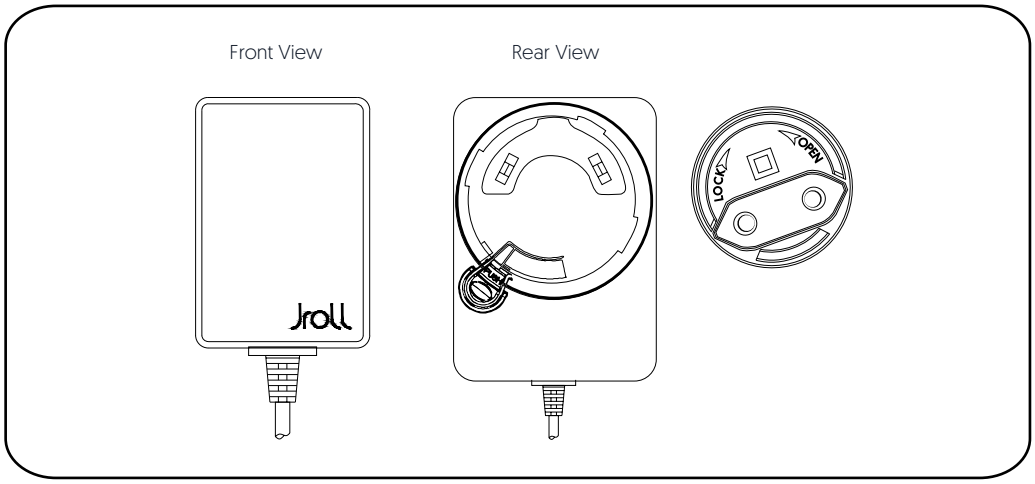

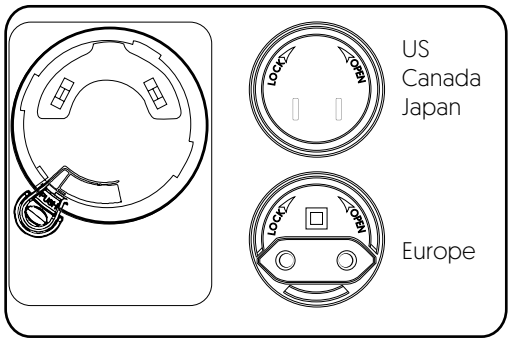

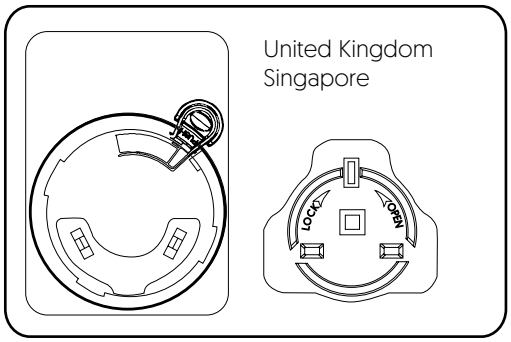

11. Service

In case of technical problems, questions about the machine, warranty claims and disposal of the machine, customers should contact the following address:

Jroll LTD
40 Kimonos Street,
3095, Limassol, Cyprus.
help@jroll.com
For service inquiries, please visit our website: www.jroll.com/returns

12. Intended Use

The Jroll X10 is used to process herbs or spices or other dry plant variants, by grinding and mixing such material and depositing the ground mixture in portable Jtubes or paper cones (wrappers). The machine can be used for grinding and mixing of herbs or spices, for products used in cooking, aromatherapy or for consumption via inhalation (using paper cones/wrappers). The Jroll X10 is not meant for use with tobacco and nicotine related products. **This machine is intended for household use only.**

13. Jroll APP

More information and full user guide can be found by visiting:
jroll.com/jroll-app

14. Troubleshooting

CHECK	When this appears on the Display, something is blocking the Door. The Jroll X10 will open the Door and will allow you to remove the cause of the obstruction. Make sure the paper cone is properly seated and fully submerged in the Jtube when loading the Jroll X10.
STUCK	When this appears on the Display, something is blocking the blades from turning when performing a GRIND function. Remove the Lid and the Grind & Mix unit. Check if any of the inserted spices or herbs are restricting the blades to rotate.
CHARGE ME	The battery is running low and to ensure optimal functionality, the Jroll X10 should be plugged in for charging.
LOCK	When the Jroll X10 is Locked, this message will appear on the display. To unlock, press and hold Touch Button at bottom of machine until "LOCK" is shown. Turn the Lid, select "UNLOCK" and press Top Button to unlock.
BLUE	In case you cannot find the Jroll X10 when searching for Bluetooth® connection, check to make sure the Bluetooth® is switched on by checking the settings.
In Case of Faults	**Do not attempt to repair the damage yourself. This will void the warranty.** ■ Switch off the Jroll X10 immediately. ■ Disconnect the Jroll X10 from the power source. ■ Contact our Service Center directly by sending an email to help@jroll.com. ■ Following our instructions, send the defective Jroll X10 to our Service Center for repair.

15. Technical Specifications

- Jroll X10
- Power supply cable: USB-C type
- Output: DC 9V 5A, Input: AC 100-240V 50/60Hz
- The voltage specification can be found on the bottom of the Jroll X10:
- Jroll X10 Size: 32.5 x 12.6 x 12.6 cm (13 x 5 x 5 inch)
- Weight: approx. 2200 g (4.84 lbs) – including 10 Jtubes.
- Packaging Dimensions: 48 x 17 x 17 cm (19.2 x 6.8 x 6.8)
- Packaging Weight: approximately 2800g (6.16 lbs)

16. Certifications

The Jroll X10 conforms to the below regulation and certification requirements:

EU conformity symbol:
The manufacturer confirms with this symbol the compliance of the product with the applicable European directives and standards.

RoHS – Product level compliance based on the European Union's Directive 2002/95/EC, the Restriction of the Use of Certain Hazardous Substances – in Electrical and Electronic Equipment.

Federal Communications Commission. The machine complies with EMC and radio technology requirements in the USA; this machine complies with Part 15 of the FCC Rules. Operation is subject to the following conditions: (1) the machine must not cause any interference, and (2) the machine must not be affected by incoming interference, including interference that may cause undesired operation

The battery and charger of the Jroll X10 complies with the UL Certification requirements. UL Certification meaning (Underwriters Laboratories) is the most recognized safety testing and evaluation agency in the United States. It is an independent, non-profit, and professional organization that provides public safety testing.

Distributor & Service Center:

Jroll LTD
40 Kimonos Street,
3095, Limassol, Cyprus.
Visit www.jroll.com/service-centers for an updated list of all our service centers.

17. Warranty & Liability

Warranty

MANUFACTURER'S/DISTRIBUTOR'S WARRANTY FOR JROLL X10
Jroll Ltd. ("Jroll") warrants the JROLL X10 against defects in materials and workmanship under normal use for a period of up to one (1) year from the date of retail purchase from jroll.com or an authorized Jroll retailer. This warranty is applicable to the original purchaser and is non-transferable.

This warranty is only valid and enforceable in the country where you purchased the product provided that Jroll has intended the product for sale in that country.

Proof of purchase must be provided prior to warranty service being provided. Please retain your receipt and upload it during product registration (www.jroll.com/welcome).

If a covered defect arises and a claim is received within the Warranty Period, at its option and to the extent permitted by law, Jroll Ltd will either (1) Repair the product defect, or (2) Exchange the product with a product that is new or is a functionally equivalent product. All machines approved for warranty support must be returned to and received by a Jroll Service Center before a replacement will be issued. Customer is responsible for bearing the cost of freight in order to receive warranty support.

The Limited Warranty does not apply to normal performance degradation of batteries, accessories, wear and tear of hinges, or neglecting to adhere to cleaning instructions. Please contact the Jroll support team to learn more about replacement batteries or extended repair Service.

Exclusions and Limitations

In addition, wear parts such as in particular the Grind & Mix units, the Jtubes and other accessories included with the devices, e.g., brush. Batteries, Charging Cables and adapters, and other parts that are particularly affected by wear and tear are excluded from the warranty.

The Limited Warranty applies only to products manufactured and distributed by Jroll Ltd. that can be identified by the "Jroll" trademark, trade name, or logo affixed to them and purchased at an authorized retailer, serviced by an authorized Jroll distributor.

The Limited Warranty does not apply to any non-Jroll products.

This warranty does not apply to (a) damage caused by accident, abuse, misuse, flood, fire, earthquake, acts of piracy, or other external causes; (b) damage caused by operating the product outside the permitted or intended use as described by Jroll; (c) a product or part that has been modified to alter functionality or capability; (d) cosmetic damage, including but not limited to scratches, dents, drops, and broken pieces; (e) any machine where the serial number has been tampered with, erased or is not genuine.

Important: Warranty applies to the original end-user purchaser only and is non-transferable. Warranty does not apply should you purchase through a 3rd party reseller site such as Ebay or Craigslist. Jroll warranties only apply to machines purchased at any authorized retailer serviced by an authorized Jroll distributor. Please see our website for information on authorized resellers before purchasing.

Intentionally opening up or disassembling your machine in any way will void your warranty.

Return Policy

Please carefully research the product you are interested in before purchasing. Refunds are only available for new and unopened/unused machines purchased on jroll.com within fourteen (14) days. Machines purchased through an authorized retailer cannot be refunded by Jroll. Such transactions should be handled directly with the retailer based on their terms and conditions.

If you would like additional information about any of our Jroll products, please contact us. Our experienced support and tech team are happy to help you make the right decision!

Limitation of Liability

This warranty is your sole and exclusive remedy against Jroll Ltd and Jroll Ltd's sole and exclusive liability in respect to defects. This warranty replaces all other Jroll Ltd warranties and liabilities in regard to the Jroll X10 whether oral, written, statutory, contractual, in tort or otherwise, including, without limitation, and where permitted by applicable law, any implied conditions, warranties or other term as to the satisfactory quality or fitness for purpose.

To the extent permitted by applicable law(s), Jroll Ltd does not assume any liability for any loss of profit, loss of use of products, functionality, loss of business, loss of contracts, loss of revenues, loss of savings, increased cost or expenses, consequential loss or special loss or damage. Jroll Ltd's liability shall be limited to the purchase value of the product.

Counterfeiting

The fight against unauthorized sales and counterfeiting is a long-term commitment to quality and service by Jroll. We are dedicated to ensuring our customers receive the modern technologies, beautiful design and world-class support that encompass our brand.

We advise consumers to be cautious when purchasing machines from unauthorized resellers as the quality, reliability, and safety of these products is uncertain and, in some cases, may expose the user to serious dangers not encountered with genuine Jroll products.

Jroll has a devoted team to actively pursue and investigate unauthorized resellers and counterfeiters to protect customers. While Jroll would like to help the victims of counterfeiting we're not able to reimburse money used to purchase infringing goods since such goods were not bought from Jroll, nor do we assist with the resolution of disputes, including assistance with PayPal or credit card refunds.

Contact Jroll support to learn more about authorized dealers, as any product purchased outside of our exclusive sales network runs the risk of being counterfeit and is not under warranty.